TOTAL E&P ANGOLA

BLOCK 17

CLOV

FMC Technologies

Report, Field Operations Summary, Project Documentation, Handbook CLOV

X

Lucien Lenerand, Project Manager CLOV Project
Signed for and on behalf of FMC Technologies

Rev.	Status	Date	Revision memo	Issued by	Checked by	Approved by
02	IFC	13-May-2014	Issued for Construction	FKSK	KOSSNY	KOSKEA
01	IFC	20-Dec-2013	Issued for Construction	FKSK	KOSSNY	KOSKEA
00	IFR	04-Apr-2013	Issued for Review	FKSK	KOSSNY	KOSKEA

REPORT, FIELD OPERATIONS SUMMARY, PROJECT DOCUMENTATION, HANDBOOK CLOV

Rev	ECN No.	Date	Reviewed By	Approved By	Status
C	6161837	12-MAY-2014	Doran, Thomas	Andreassen, Karl Espen	RELEASED

Summary:

This report contains the technical handbook for FMC scope of work for CLOV. The handbook has been prepared by iBruk.

CLOV

Personal Handbook Subsea Production System

FMC Technologies

Introduction

This issue is aimed at the CLOV Subsea project. The purpose of the handbook is to provide general information on the equipment.

The handbook must not replace the official user documentsation as any information may be changed or updated without further notice.

Index

05. Xmas Tree System

FMC Technologies Customer Support (Local):
FMC Kongsberg International Angola
Sonils Oilfield Service Center
Rua 6 - I.L. Boavista
Republica de Angola
Telephone: +244 222 310920
Telefax: +244 22 310880

FMC Technologies Kongsberg:
PO Box 1012
3601 Kongsberg
Norway
Telephone: +47 32286700
Telefax: +47 32286750

FMC Technologies Customer Support (ER):
PO Box 103
5346 Ågotnes
Norway
Telephone: +47 56323232
Telefax: +47 56323235

FMC Technologies Dunfermline:
Pitreavie Business Park
Dunfermline
Scotland
KY11 8UD
Telephone: +44 1383 731531

A	Accumulator /Function Line
ADSV	Annulus Downhole Safety
AIVL	Annulus isolation valve lower
AIVU	Annulus isolation valve upper
ALP	Accumulator Low Pressure
AMV	Annulus Master Valve
APD	Acoustic Pig Detector
API	American Petroleum Institute
APUL	Accumulator Primary Unlock
AS	Accumulator Supply
ASD	Acoustic Sand Detector
ASJ	Annulus Slick Joint
ASME	American Society of Mechanical Engineers
ASS	Annulus Sliding Sleeve
ASSR	Accumulator Shear Seal Ram
ASUL	Accumulator Secondary Unlock
ASV	Annulus Swab Valve
AWV	Annulus Wing Valve
BA	Bladder Accumulator
BOM	Bill of Material
BOP	Blow Out Preventer
BPV	Bypass valve
BV	Ball Valve
C	Compensator
CAT	Connector Actuator Tool
CCF	Closed Caisson Foundation
CDT	Cool Down Test
CDV	Contingency Disconnect Valve
CHA	Circulation Head Assembly
CHKV	Check valve
CI	Corrosion Inhibitor
CITV	Chemical Injection Throttle Valve
CIU	Chemical Injection Unit
CIV 1 - 4	Chemical Isolatiopn Valve 1 - 4
CIV A-C	Chemical Isolation Valve A - C
CL	Connector Lock
CLOV	Cravo, Lirio, Orquidea and Violeta
CMDR	CONTRACTOR Master Document Register
CoG	Center of Gravity
COV	Change Over Valve
CP	Cathodic Protection
CPI	Company Provided Item
CPP	Configuration Plug Pressure
CPR	Configuration Plug Return
CR	Calibrated range
CRA	Corrosion Resistant Alloy
CS	Chemical Spare
CSU	Chemical spare umbilical
CT	Coiled Tubing
CU	Connector Unlock
CV	Choke Valve/Check Valve
CW	Clock wice
CWO	Completion / Workover
DBBV	Double Block Bleed Valve
DCV	Directional Control Valve
DHG	Downhole Gauge
DHPT	Downhole Pressure & Temperature
DHSV	Downhole Safety Valve
DIU	Downhole Interface Unit/Digital Interface Unit
DIV	Diver/ Demulfifier Injection valve
DNV	Det Norske Veritas
DP	Design Pressure /Drill Pipe
DPT	Differential Pressure Transmitter
DS-1	Drillship 1
DSL	Digital Subscriber Liner

DVT	Design Verification Test
E&P	Exploration & Production
EC	Electical Connector
ECCL L	EDP Connector Cutting Loop Lock
ECCL UL	EDP Connector Cutting Loop UnlLock
ECST	EDP Connector Seal Test
EDP	Emergency Disconnect Package
EFAT	Extended Factory Acceptance Test
EFL	Electric Flying Lead
EFS	Electrical Feedthrough System
EH	Electro-Hydraulic
EJB	Electrical Junction Box
EL	EDP Lock
EQD	Emergency Quick Disconnect
ESD	Emergency Shut Down
ESUL	EDP Secondary UnLock
EUL	EDP UnLock
EVXT	Enhanced Vertical Xmas Tree
F	Filter
FAT	Factory Acceptance Test
FC	Flushing Channel
FLET	Flow Line End Terminal
FM	Flow Meter
FMECA	Failure Mode Effect and Criticality Analysis
FOFL	Fiber Optical Flying Lead
FOFS	Fiber optical Feedtrough System
FPSO	Floating Production Storage & Offloading
FSC	Fail Safe Close
FSLT	Flexible Sealine Lifting Tool
FSO	Fail Safe Open
FWHP	Flowing Wellhead Pressure
FWHT	Flowing Wellhead Temperature
GF	Gas Fill
GLL	Guideline less
HAZID	HAzard IDentification
HAZOP	HAZard and OPerability analysis
HC	Hydraulic Coupler
HCR	High Collapse Resistant
HFL	Hydraulic Flying Lead
HISC	Hydrogen Induced Stress Cracking
HL	Hot Line /hydraulic Line
HMI	Human Machine Interface
HP	High Pressure
HPMRI	High pressure Metal Re Installable
HPU	Hydraulic Power Unit
HSCR	Hydraulic Stab Connector Receptacle
HSE	Health Safety and Environment
HSLV	High Set Lubricator Valve
HSR	Hydraulic Stab Connector
HTP	Hydraulic Test Panel
HV	High Voltage
IC	Intervention & Connection
ICSS	Integrated Control and Safety System
ICU	Inline Connection Unit
ICV	Injection Choke Valve
ID	Internal Diameter
IDS	Interface Data Sheet
ILT	In-Line Tee
IMV	Injection Master Valve
ISO	International Organization for Standardization
ISV	Injection Swab Valve
IWC	Intelligent Well Control
IWCM	Intelligent Well Control Module
IWIS	Intelligent Well Interface Standard
IWOCS	Intervention Workover Control System

Abbreviations

IWV	Injection Wing valve
KVM	Keyboard, Video, Mouse
LAIV	LRP Annulus Isolation Valve
LAOT	Linear Actuator Override Tool
LCCL	LRP Connector Cutting Loop
LCP	Local Control Panel
LCST	LRP Connector Seal Test
LD	Leak Detector
LDHI	Low Dose Hydrate Inhibitor
LDT	LDHI Injection Throttle Valve
LDU	LDHI Isolation Valve to Umbilical
LMIV	LRP Methanol Injection Valve
LMRP	Lower Marine Riser Package
LMUL	LRP Mechanical UnLock
LP	Low Pressure
LPIV	LRP Production Isolation Valve
LRP	Lower Riser Package
LS	Landing String
LSJ	Lower Stress Joint
LSM	Long speed modem
LSUL	LRP Secondary UnLock
LUL	LRP UnLock
LVDT	Linear voltage differential transducer
LWRP	Lower Workover Riser Package
LXOV	LRP CrossOver Valve
MAN	Manifold
MCC	Motor Control Centre
MCM	Manifold Control Module
MCP	Master Control Panel
MCT	Multi Cable Transit
MDS	Material Data Sheet
MEG	Mono Ethylene Glycol
MeOH	Methanol
MHV	Manifold Header Valve
MI	Methanol Injection
MIU	Methanol Injection umbilical
MIV	Methanol Injection Valve
MK	Mark
MM	Manifold Module
MPFM	Multiphase Flow Meter
MPP	Multi Phase Pump
MPV	Manifold Production Valve
MQC	Multi Quick Connection
MR	Marine Riser
MRT	Module Running Tool
MSS	Manifold Support Structure
MUL	Meckanical UnLock
MXOV	Manifold Cross Over Valve
N/A	Not Applicable
NAP	Naphthenate
NDE	Non Destructive Examination
NPT	National Pipe Thread
NV	Needle Valve
O/EWS	Operator / Engineering Work Station
OC	Optical Connector
OD	Outer Dimension
OOC	Out Of Country
OS	Operator Station
OWS	Operator Work Station
P	Supply line
PCV	Production Choke Valve
PD	Pig Detector
PDS	Product Data Sheet
PFD	Probability of Failure on Demand analysis
PGB	Permanent Guide Base
PIV	Production Isolation Valve

PLC	Programmable Logic Controller
PLM	Pig Loop Module
PMI	Positive Materials Identification
PMV	Production master Valve
PPBV	Particles Per Billion by Volume
PPM	Parts Per Million
PPMV	Particles Per Million by Volume
PSD	Process Shut Down
PSEM	Portable SEM Simulator
PSV	Production Swab Valve
PT/TT	Pressure & Temperature Transmitter
PWV	Production Wing Valve
PXT	Production Xmas Tree
QD	Quick Disconnect
QDV	Quick Dump Valve
R	Return line
RACV	Riser Annulus Circulation Valve
RAM	Reliability, Availability, Maintainability Analysis
RC	Return Compensator
RCU	Remote Control Unit
RHS	ROV Hot Stab
ROV	Remotely Operated Vehicle
RRV	Riser Retainer Valve
RT	Running Tool
SAMS	Subsea Acoustic Monitoring System
SCM	Subsea Control Module
SCMMB	SCM Mounting Base
SCMTS	SCM Test Stand
SCS	Subsea Control System
SCSSV	Surface Controlled Subsurface Safety Valve
SCU	Subsea Control Unit (same as Master Control Station)
SD	Shut Down
SDPU	Subsea Data Processing Unit
SEM	Subsea Electronic Module
SESI	Sensor Simulator
SFT	Surface Flow Tree
SFTWV	SFT Wing valve
SI	Scale Inhibitor
SIL	Safety Integrity Level
SIS	Safety Instrumented System
SIT	System Integration Test
SIV	Subsea Isolation Valve
SIWHP	Shut-in Well Head Pressure
SL	Speedloc
SLS	Simplified Landing String
SLV	Service Service Valve
SM	Smart
SPCIV	Surface Production Chemical Injection Valve
SPCS	Subsea Production Control System
SPCTU	Subsea Power & Communication Test Unit
SPCU	Subsea Power and Communication Unit
SPFM	Single Phase Flow Meter
SPKV	Surface Production Kill Valve
SPMV	Surface Production Master Valve
SPP	Pilot Line
SPS	Subsea Production System
SPSV	Surface Production Swab Valve
SPWV	Surface Production Wing Valve
SRM	Subsea Router Module
SRV	Secondary Release vent
SS	Stainless Steel
SSC	Sliding Sleeve Close
SSO	Sliding Sleeve Open
SSR	Shear Seal Ram
SST	Sealine Stroking Tool

Abbreviations

ST	Smart Tool
STP	Stab plate
SUT	Stack-Up Test
SV	Sampling Valve
SW	South West / Shallow Water
SWT	Shallow Water Test
TBA	To Be Announced
TCP/IP	Transmission Control Protocol / Internet Protocol
TEM	Topside Electronic Module
TH	Tubing Hanger
THOJ	Tubing Hanger Orientation Joint
THRT	Tubing Hanger Running Tool
TIF	Tool Interface Frame
TM	Template Manifold
Tp	Spectral peak period
TPU	Topside Processing Unit
TRT	Tree Running Tool
TSR	Topside Router
TSS	Topside Switch
TUTU	Topside Umbilical Termination Unit
UCON	Universal ROV Operated Connection Tool
UCON-H	Universal Connector System, Horizontal mode
UMB	Umbilical
UN	Union Nut
UPS	Uninterruptable Power Supply
USJ	Upper Stress Joint
VCP	Valve Control POD
VGR	VX Gasket Release
VXT	Vertical X-mas Tree
WAT	Wax Appearance Temperature
WCS	Well Completion System
WG	West Gemini (rig)
WH	Wellhead
WHP	Wellhead Pressure
WHSIP	Wellhead Shut-In Pressure
WHTA	Wellhead Temporary Abandonment
WI	Water Injection
WIXT	Water Injection Xmas Tree
WL	Wire Line
WLL	Working Load Limit
WO	Work Over
WOCM	Workover Control Mudule
WOCS	Workover Control System
WOR	Workover Riser
WP	Working Pressure
WST	Wellhead Seal Test
WTM	Wall Thickness Monitoring
XOV	Cross Over Valve
XT	X-mas Tree
XTC	Production X-mas Tree Tree Cap

02. Field Layout

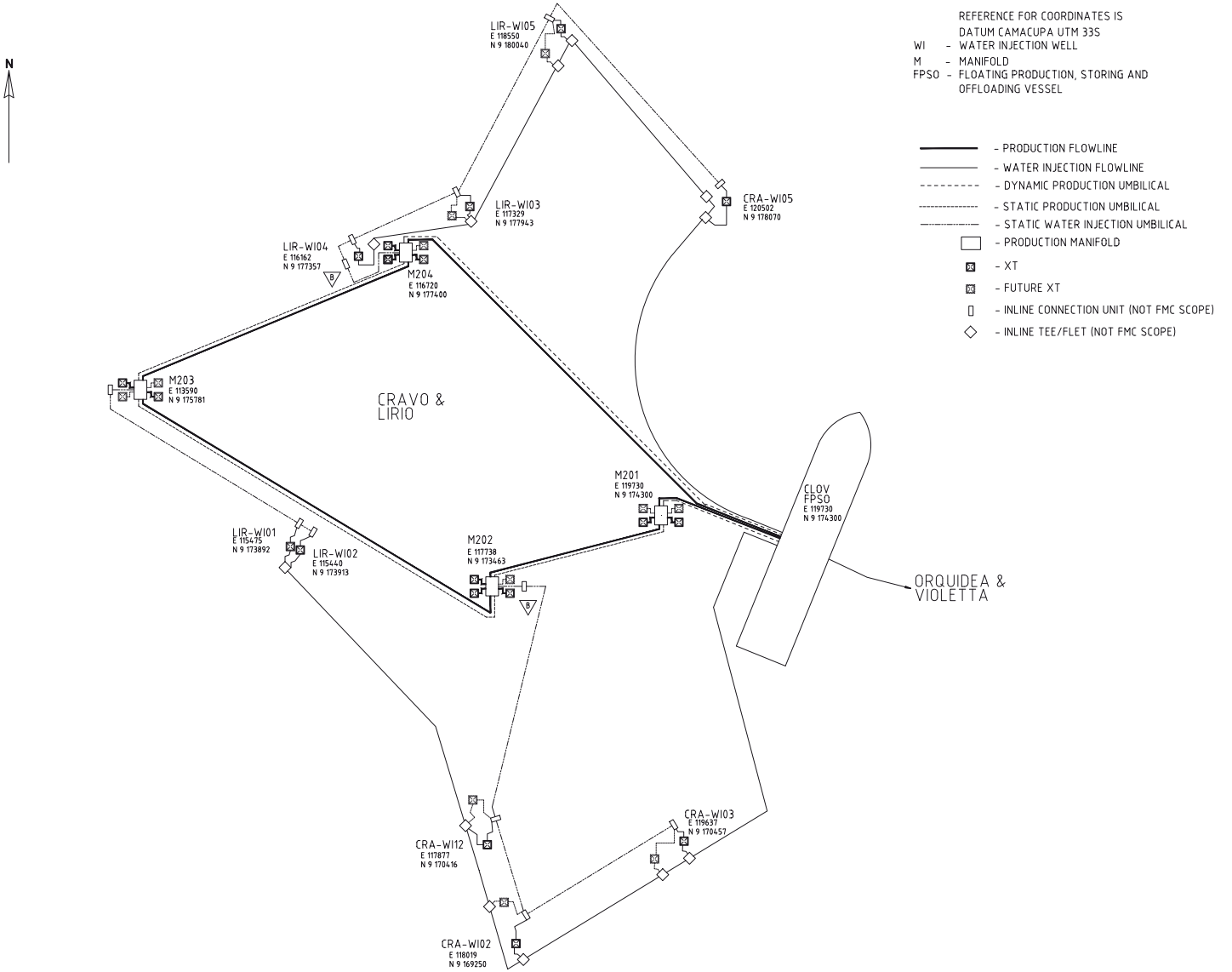

Field Layout Cravo & Lirio

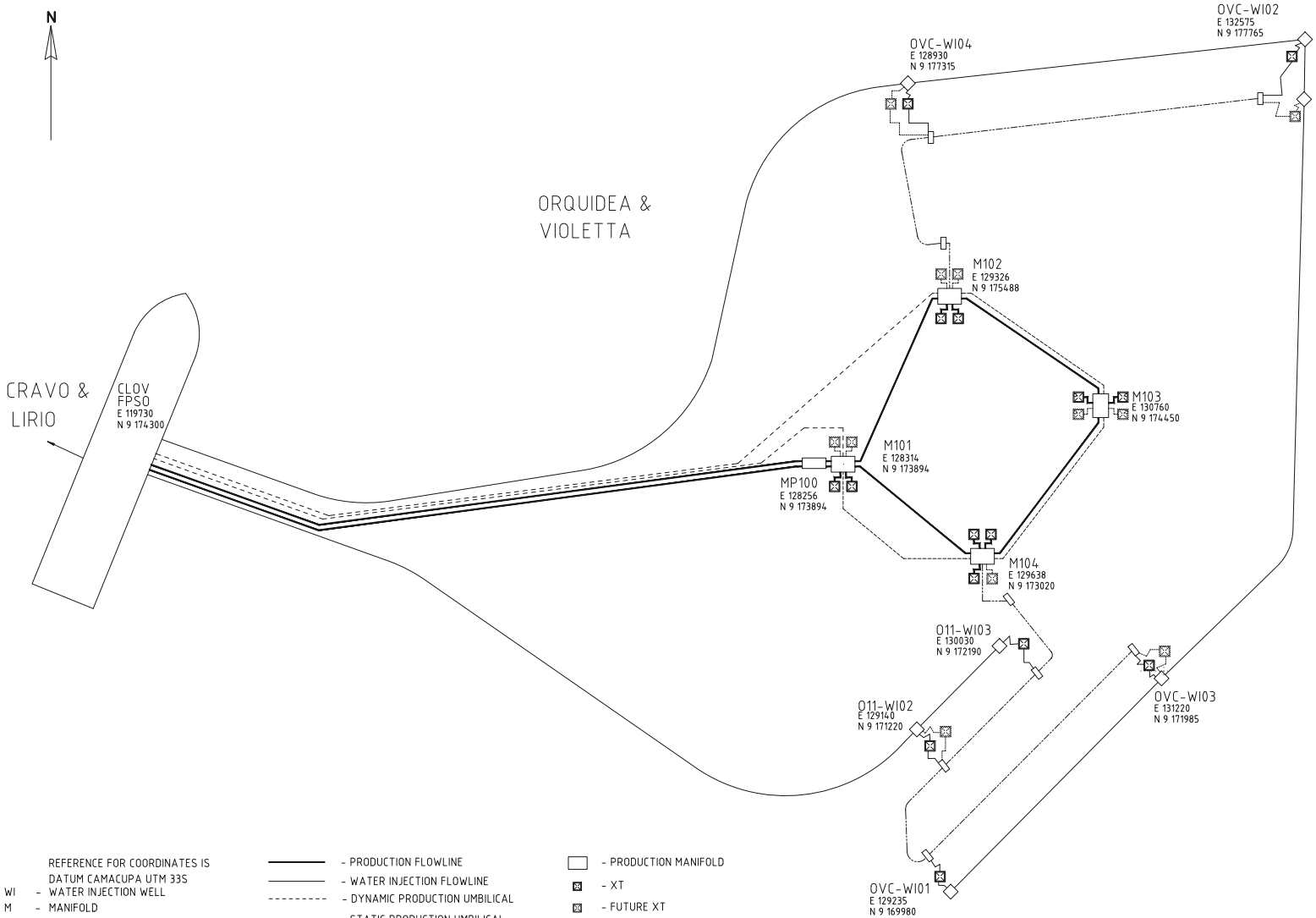

REFERENCE FOR COORDINATES IS
DATUM CAMACUPA UTM 33S

WI - WATER INJECTION WELL
M - MANIFOLD
MP100 - MULTI PHASE PUMP MODULE
FPSO - FLOATING PRODUCTION, STORING AND OFFLOADING VESSEL

- PRODUCTION FLOWLINE
- WATER INJECTION FLOWLINE
- DYNAMIC PRODUCTION UMBILICAL
- STATIC PRODUCTION UMBILICAL
- STATIC WATER INJECTION UMBILICAL

- PRODUCTION MANIFOLD
- XT
- FUTURE XT
- MULTIPHASE PUMP MODULE (NOT FMC SCOPE)
- INLINE CONNECTION UNIT (NOT FMC SCOPE)
- INLINE TEE/FLET (NOT FMC SCOPE)

Field Layout Orquidea & Violeta

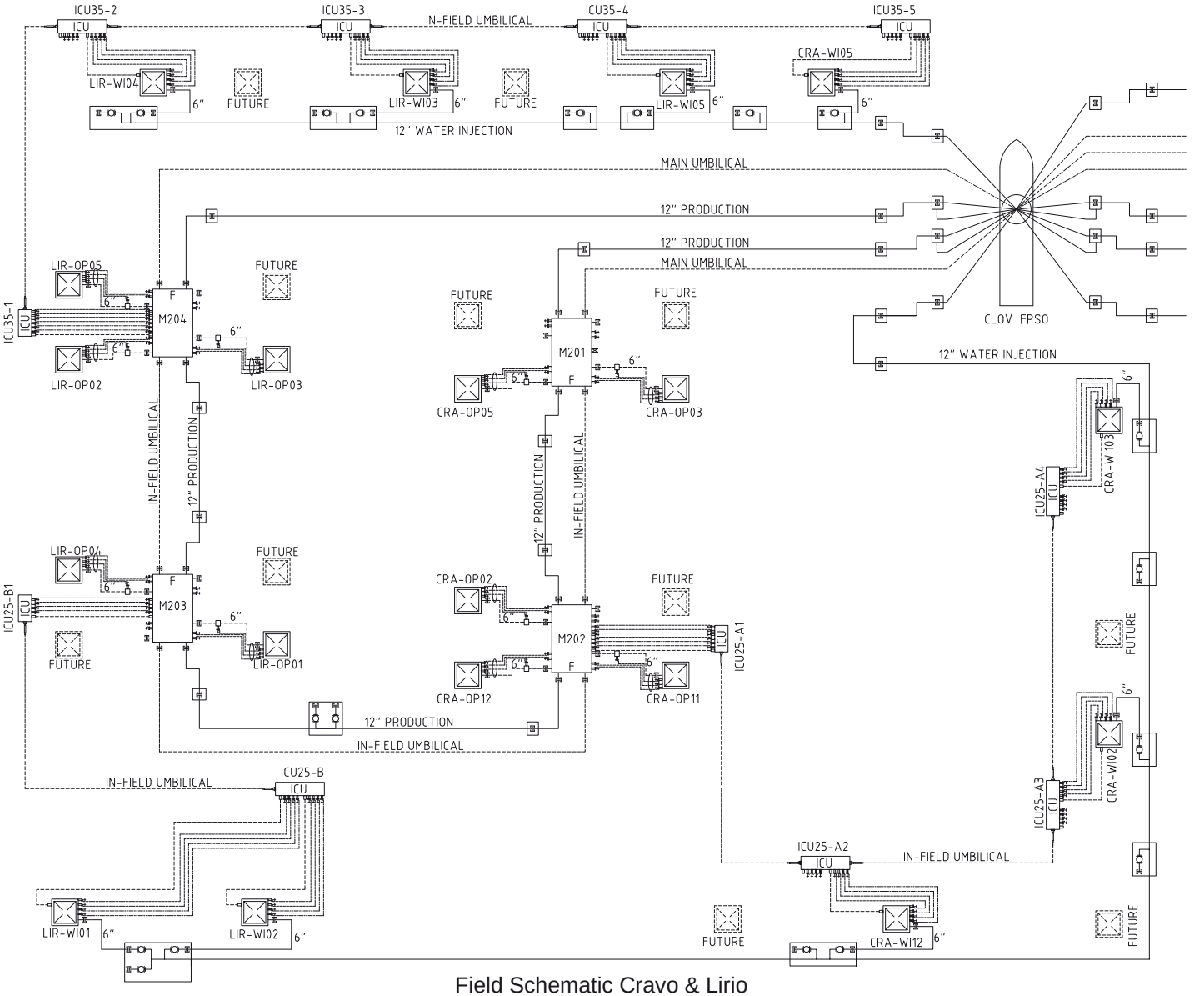

Field Schematic Cravo & Lirio

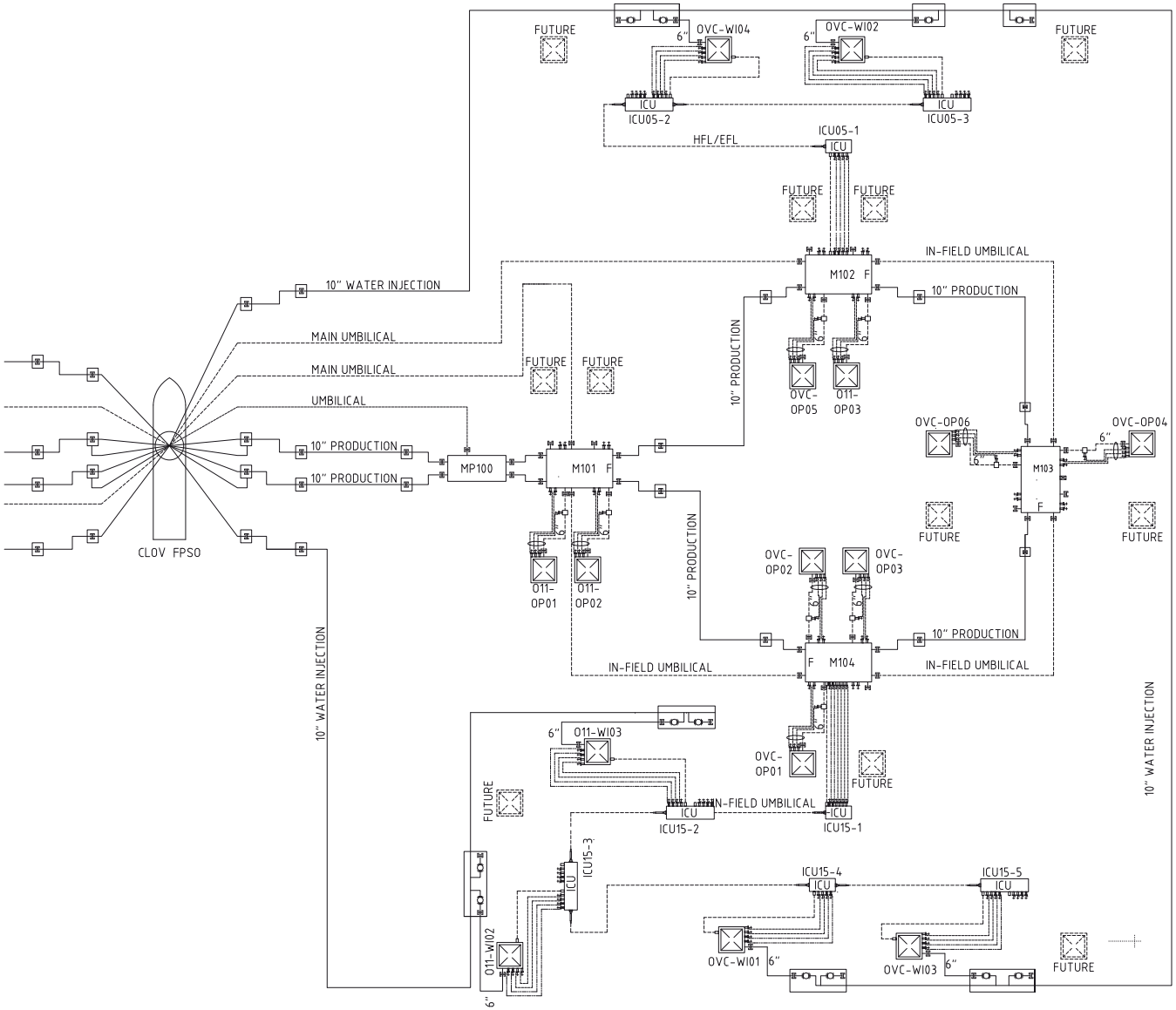

Field Schematic Orquidea & Violeta

NOTES

03. Topside and Subsea Control System

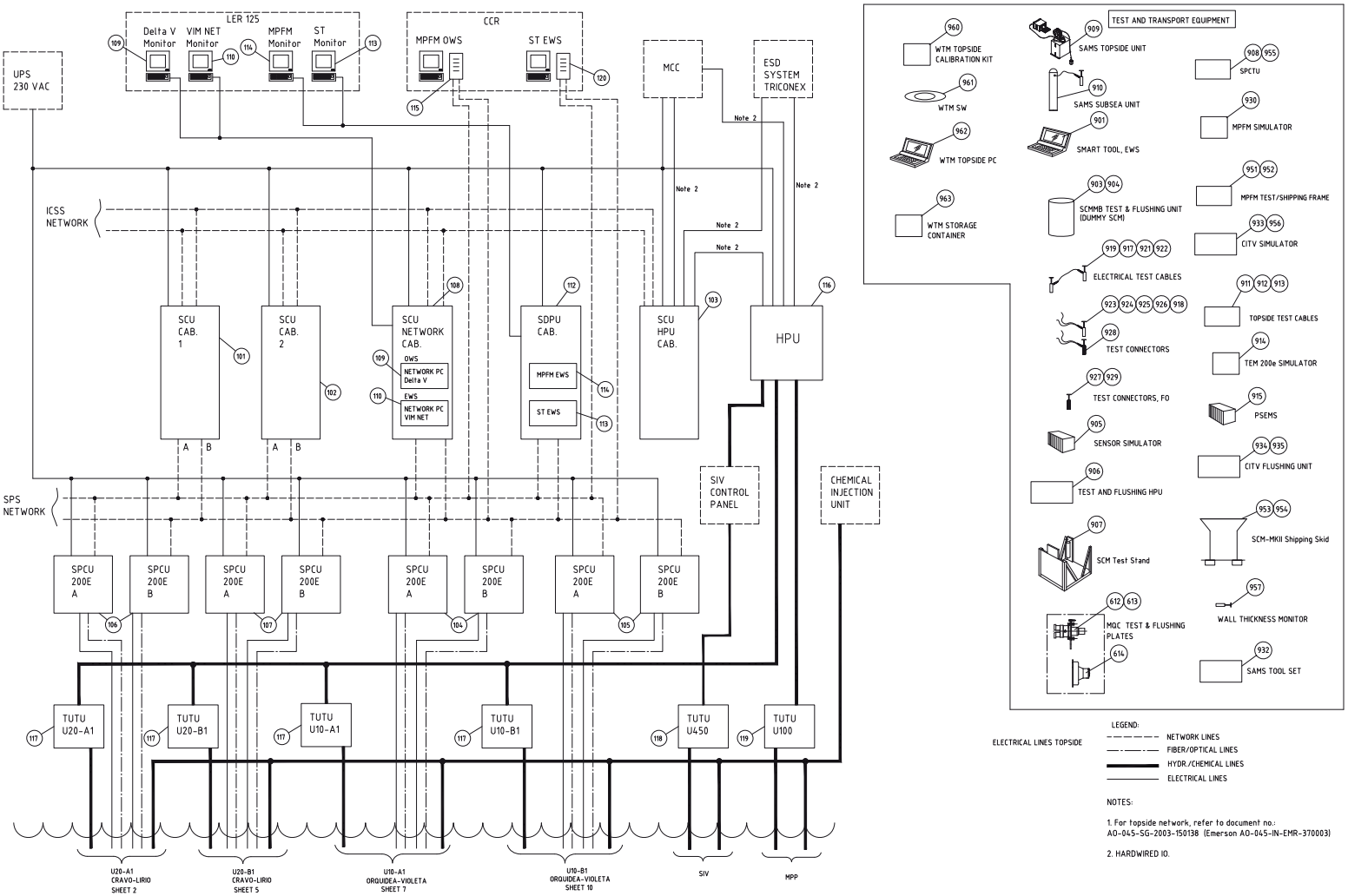

Control System Scope of Supply - Topside

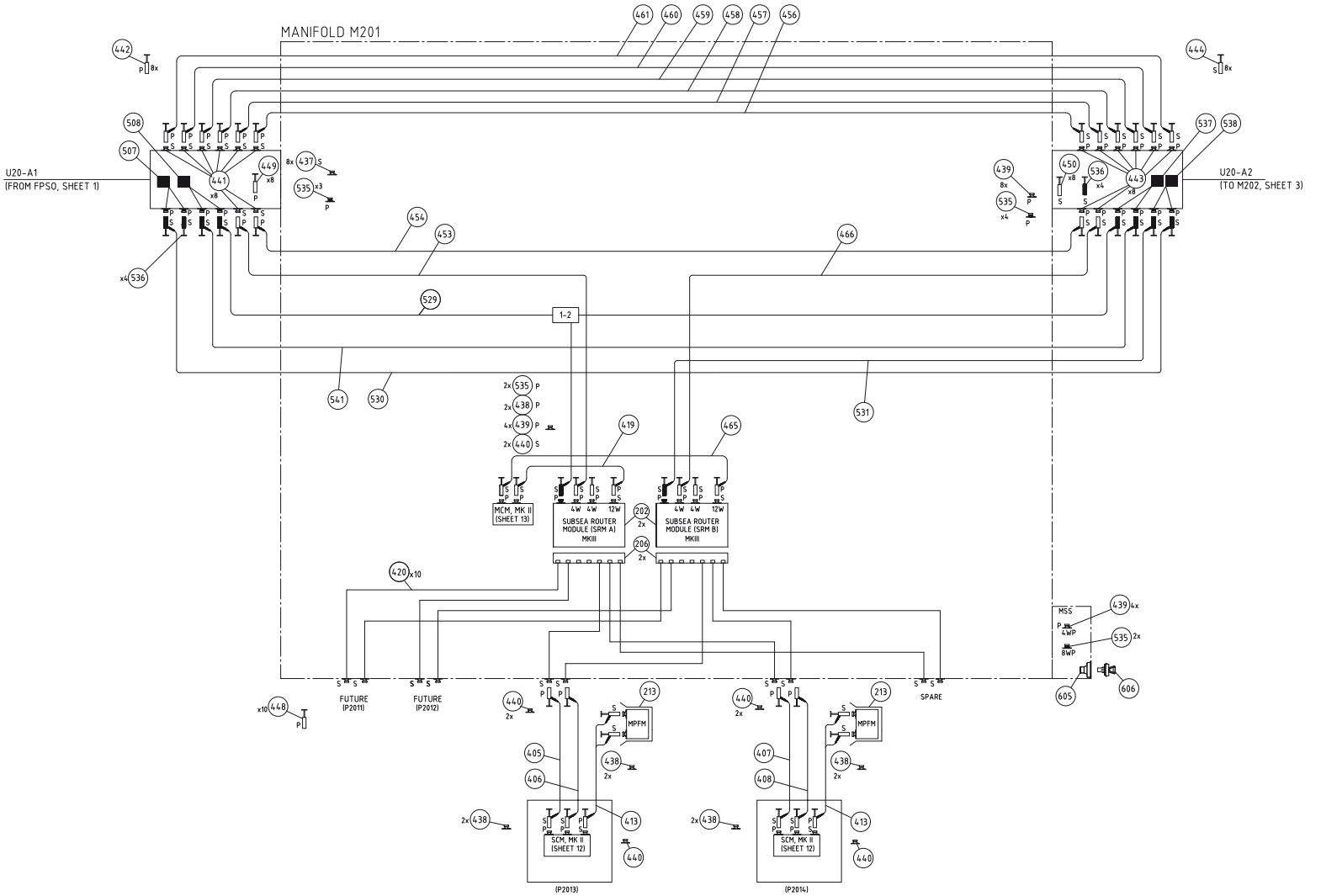

Control System Scope of Supply - Manifold M201

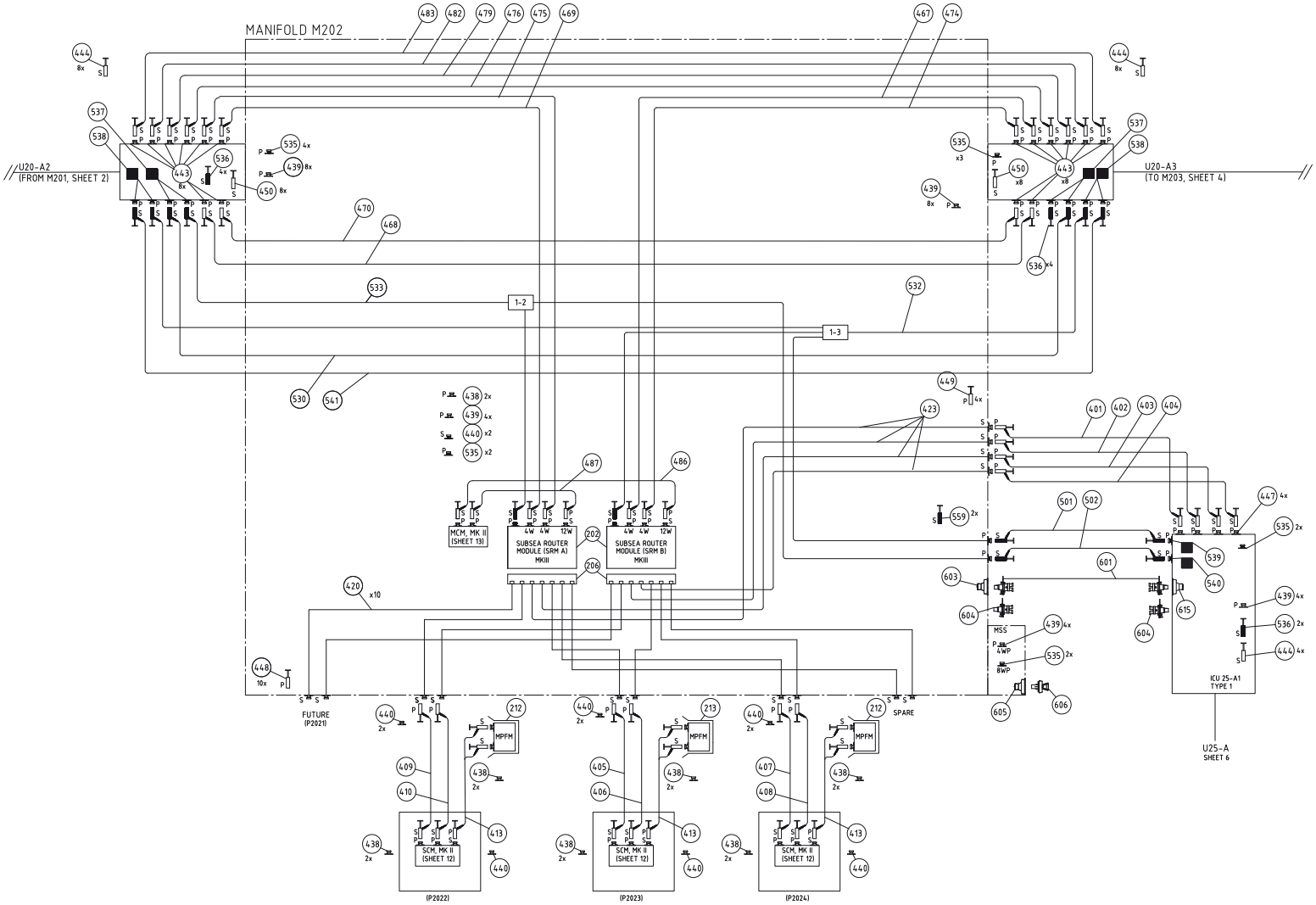

Control System Scope of Supply - Manifold M202

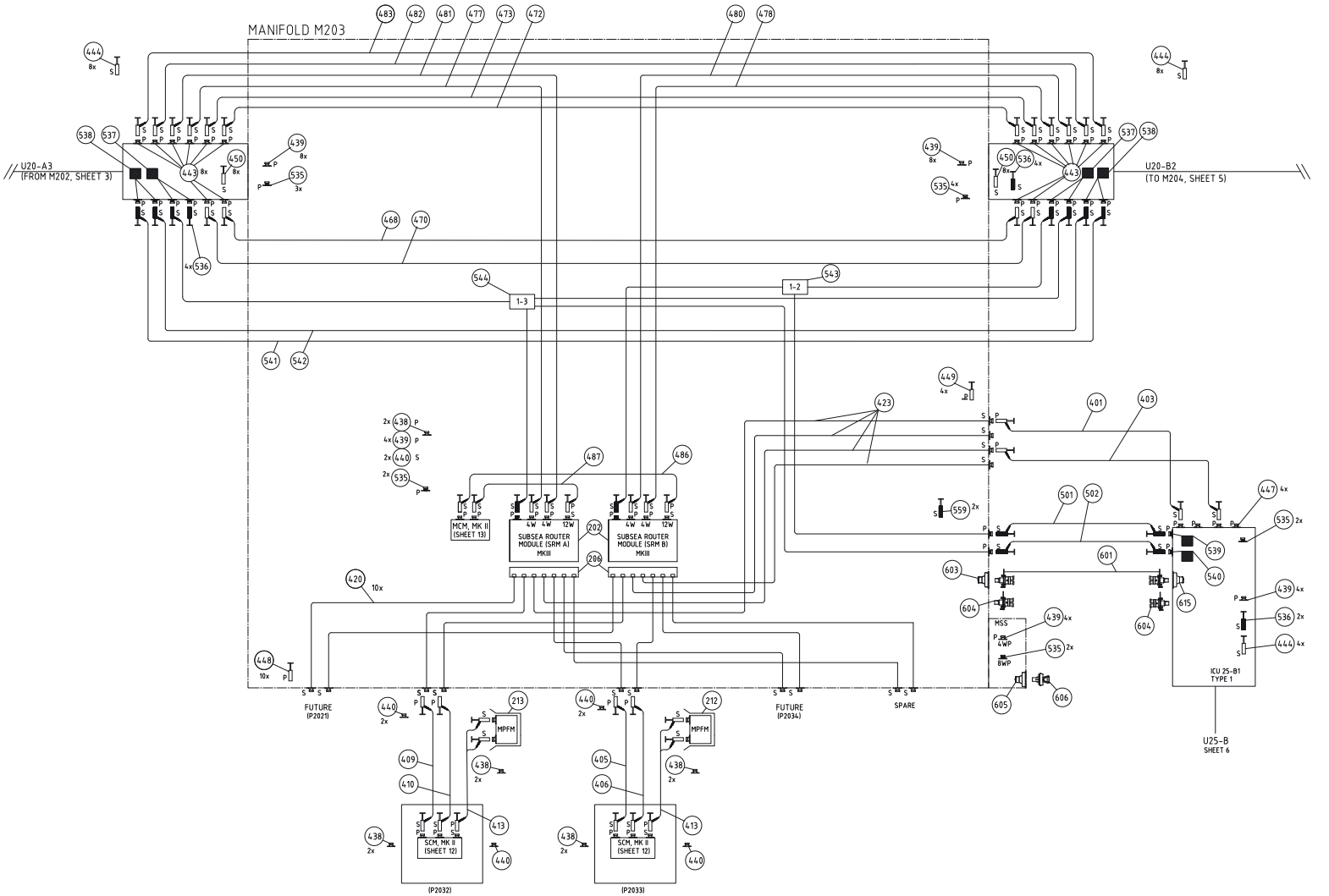

Control System Scope of Supply - Manifold M203

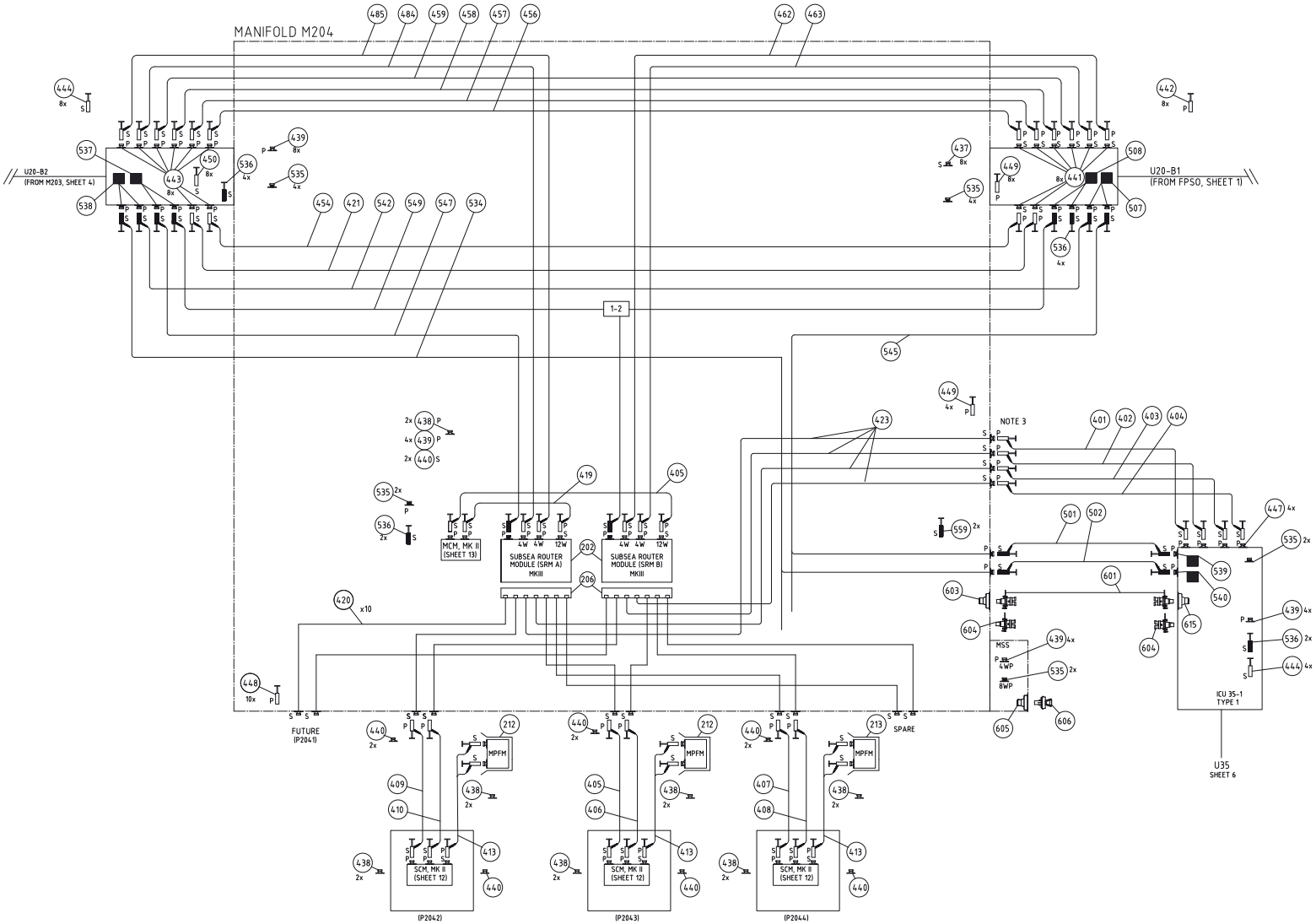

Control System Scope of Supply - Manifold M204

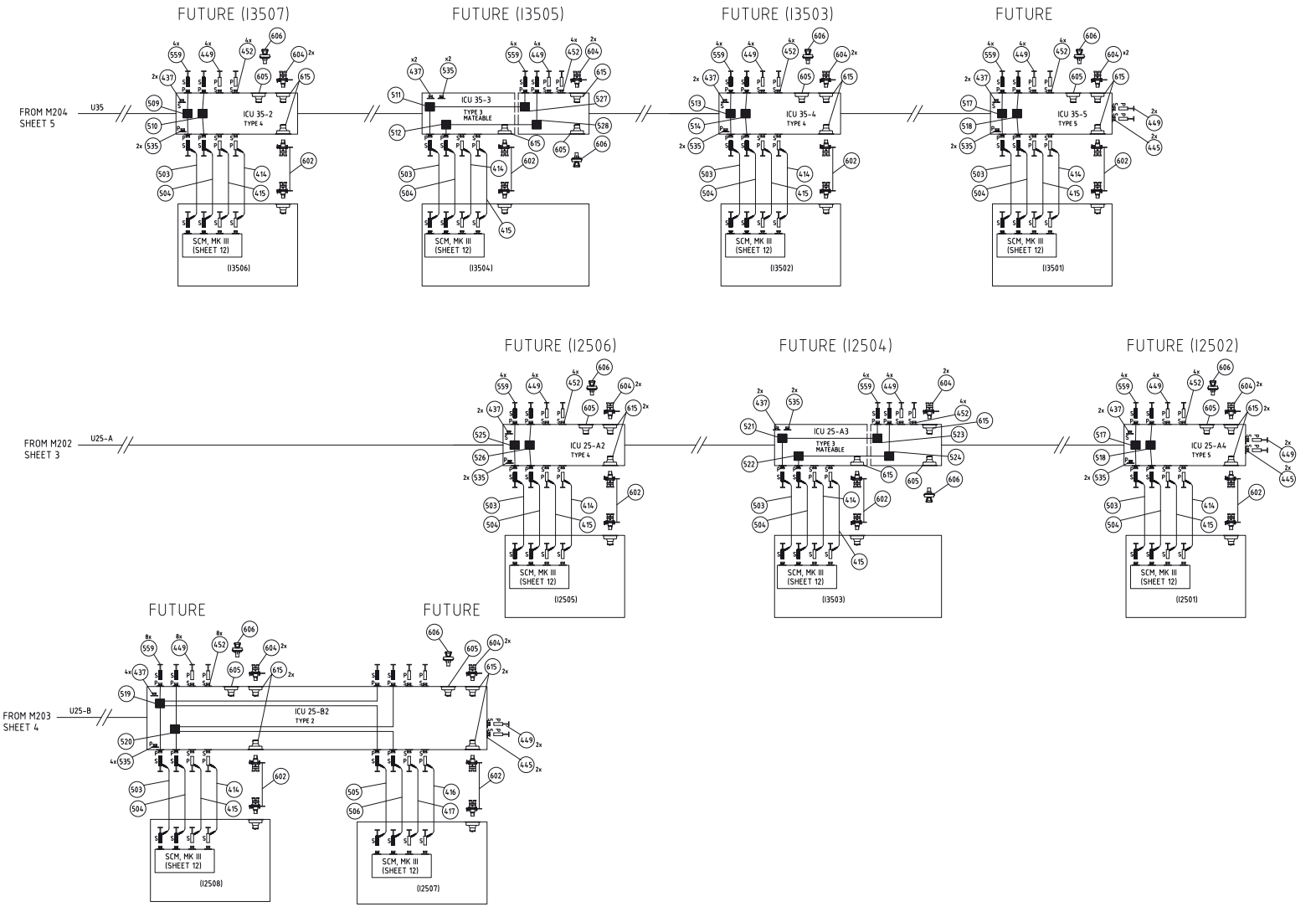

Control System Scope of Supply - ICU and WI XT, Cravo & Lirio

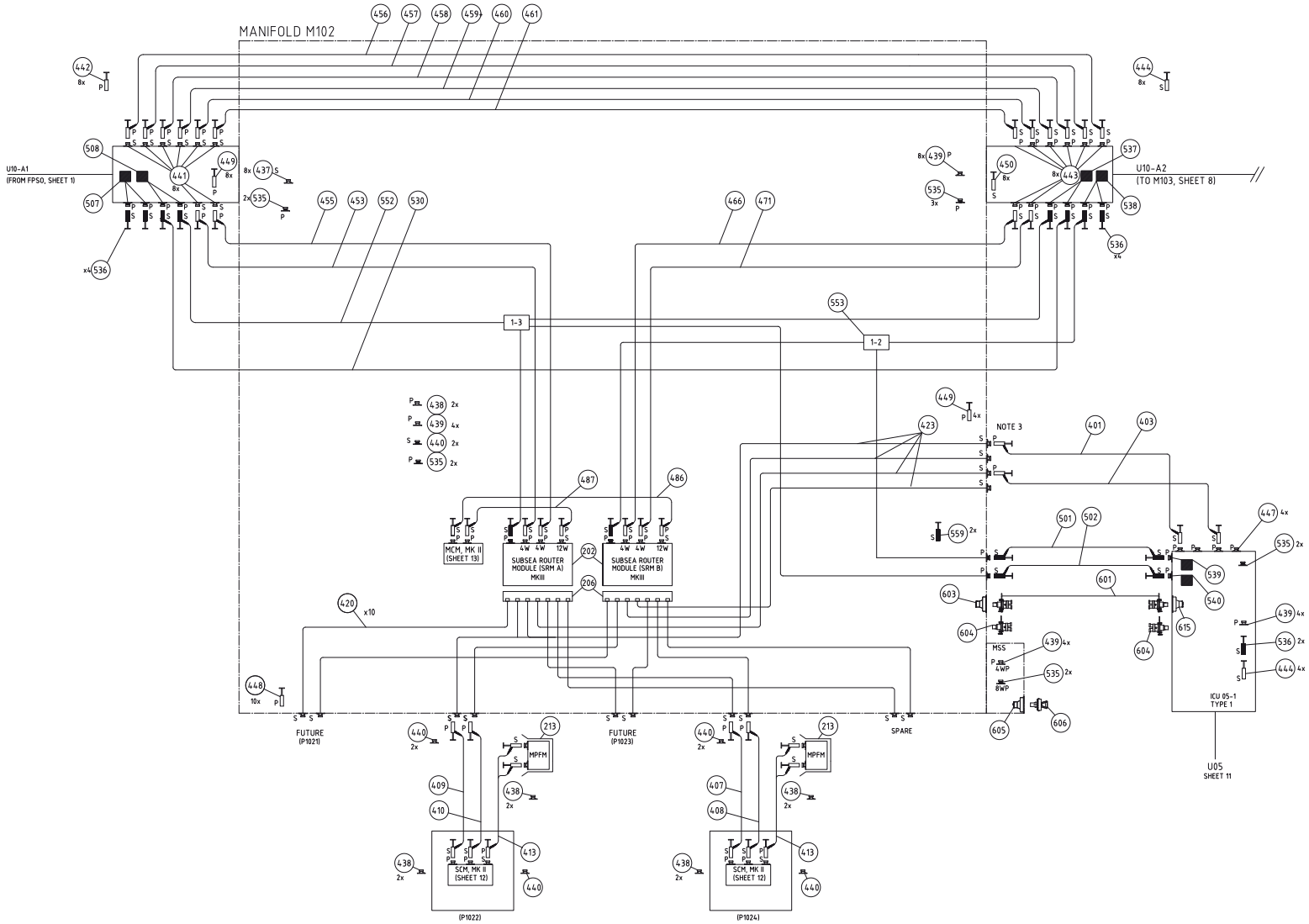

Control System Scope of Supply - Manifold M102

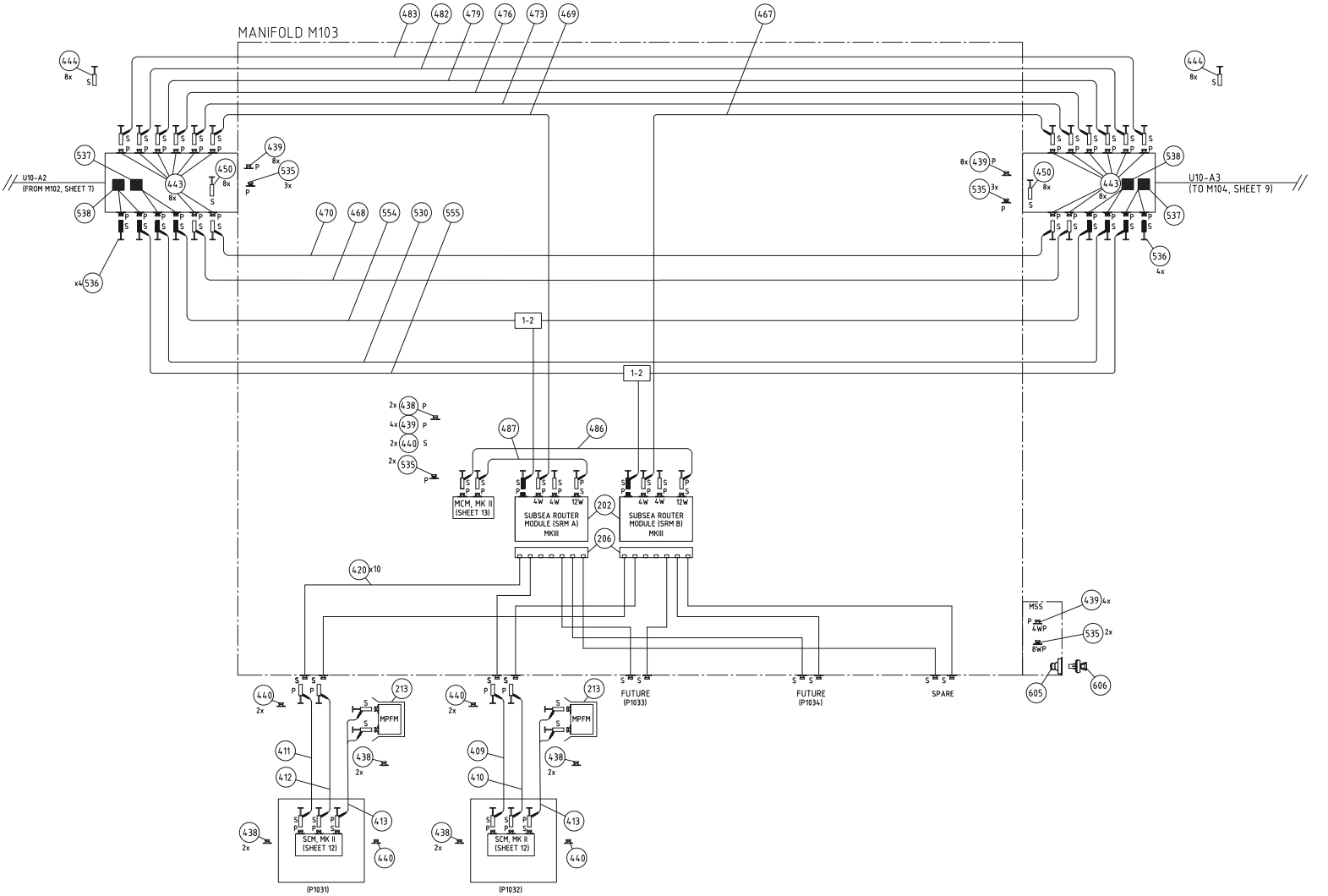

Control System Scope of Supply - Manifold M103

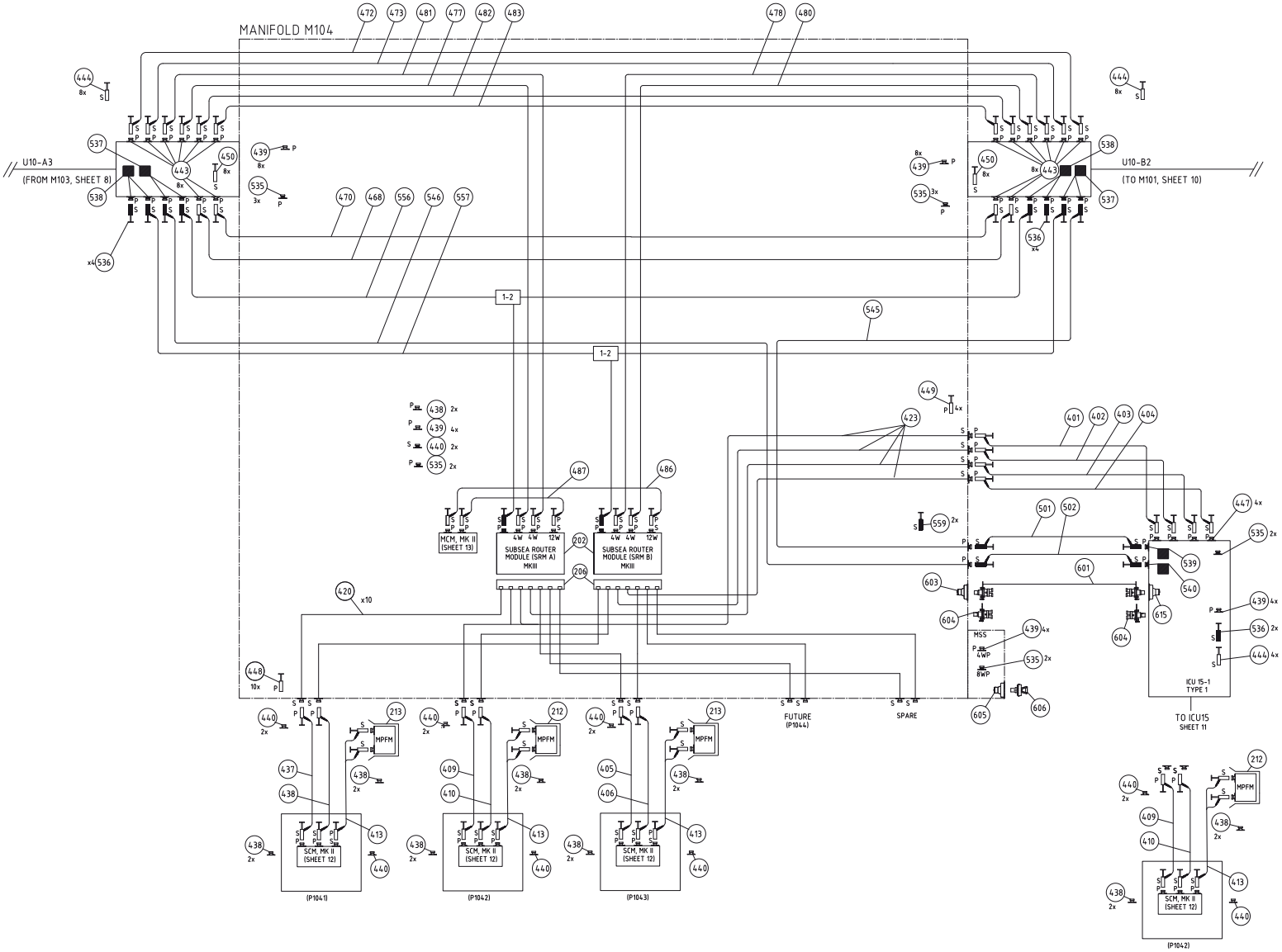

Control System Scope of Supply - Manifold M104

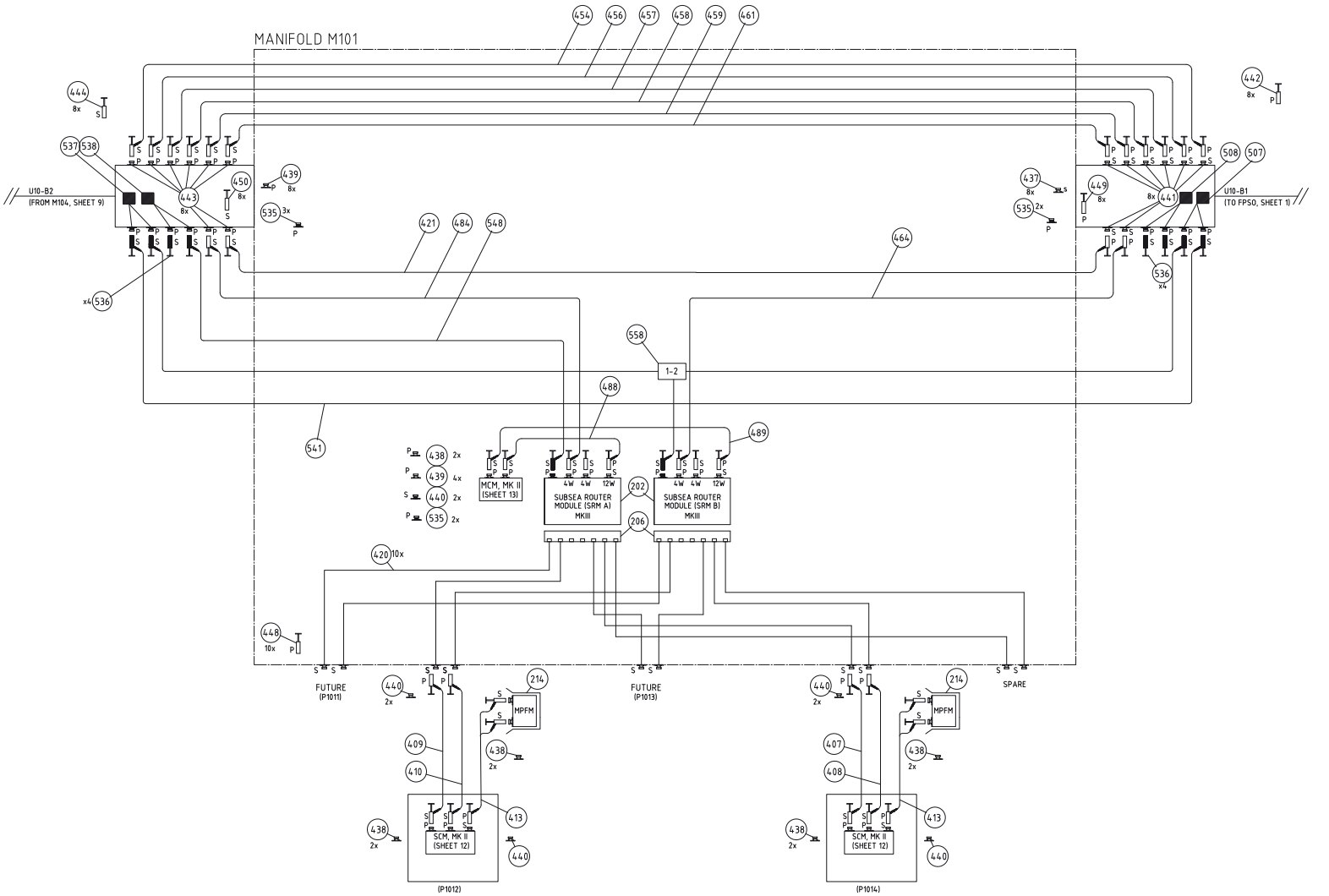

Control System Scope of Supply - Manifold M101

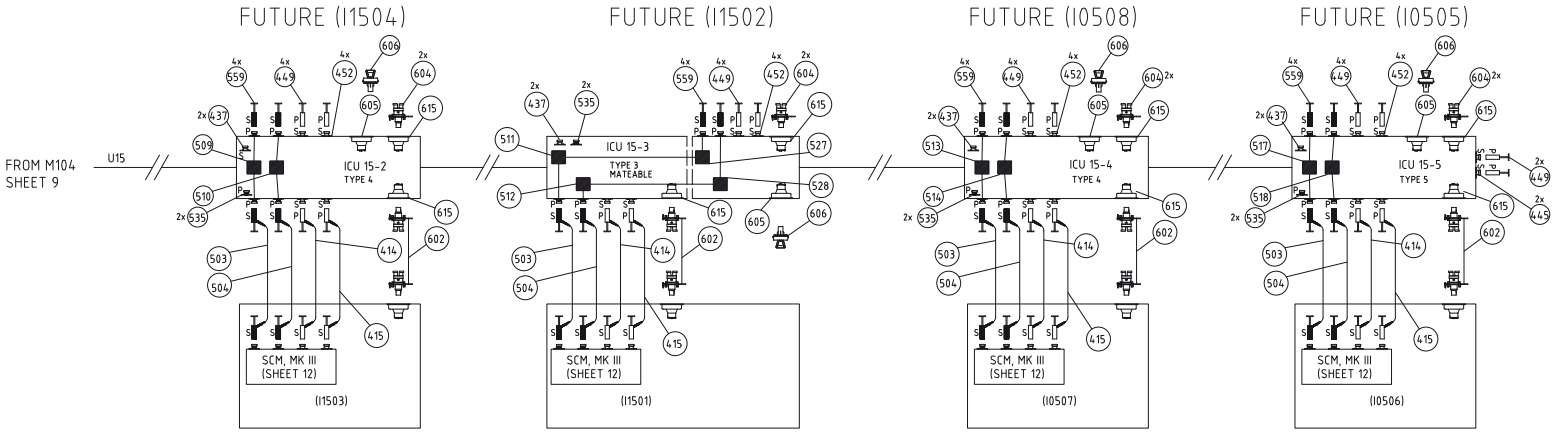
FUTURE (I1504)
FUTURE (I1502)
FUTURE (I0508)
FUTURE (I0505)
FROM M104
SHEET 9
U15
ICU 15-2
TYPE 4
ICU 15-3
TYPE 3
MATEABLE
ICU 15-4
TYPE 4
ICU 15-5
TYPE 5
SCM, MK III
(SHEET 12)
(I1503)
(I1501)
(I0507)
(I0506)

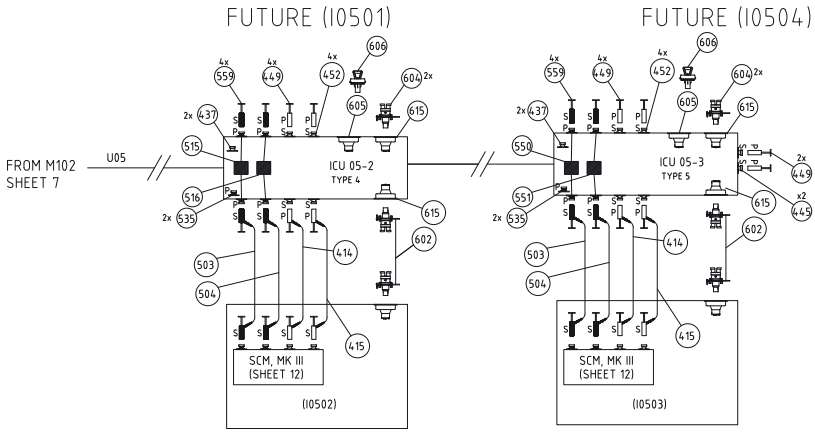
FUTURE (I0501)
FUTURE (I0504)
FROM M102
SHEET 7
U05
ICU 05-2
TYPE 4
ICU 05-3
TYPE 5
SCM, MK III
(SHEET 12)
(I0502)
(I0503)

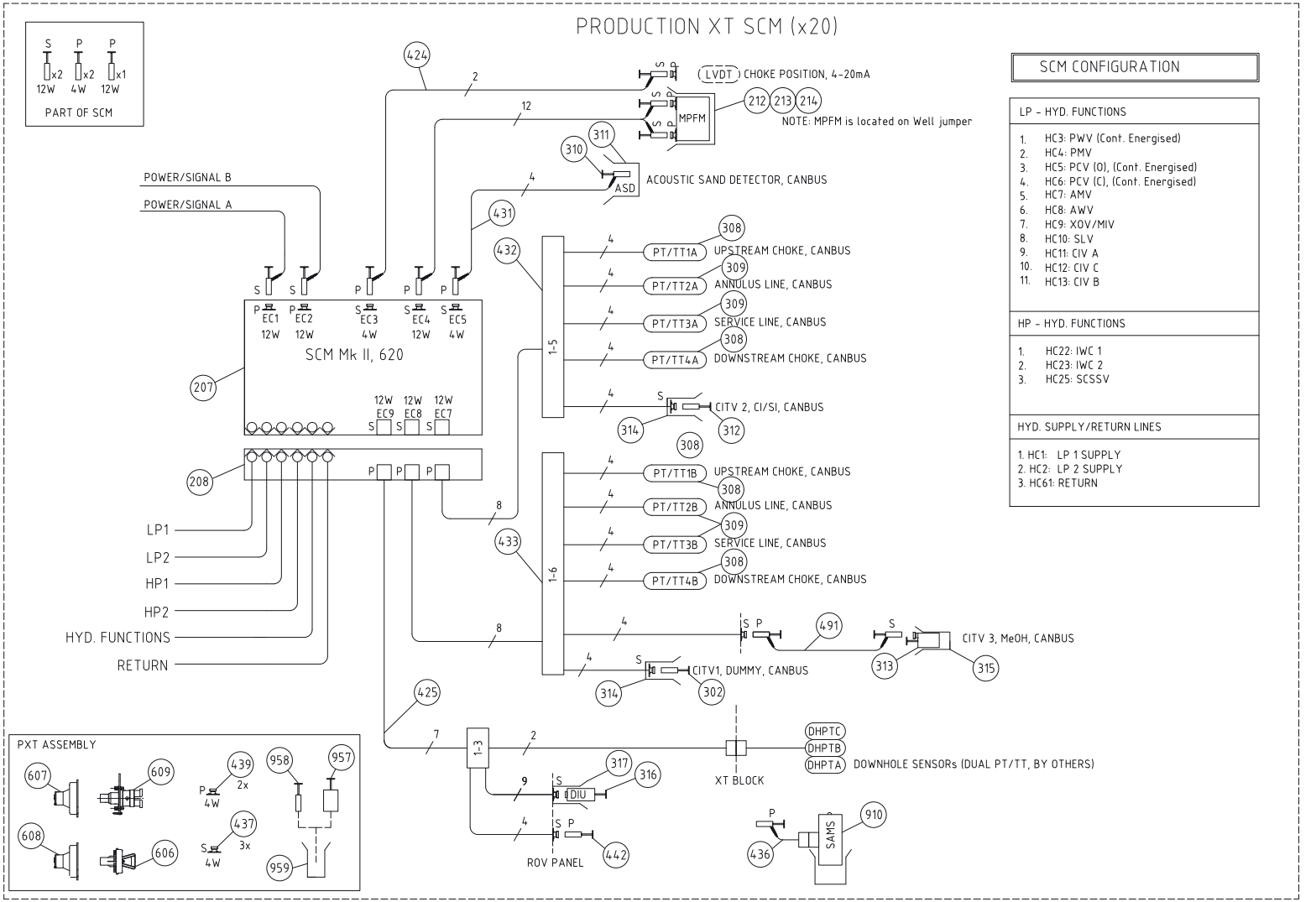

Control System Scope of Supply - PXT SCM

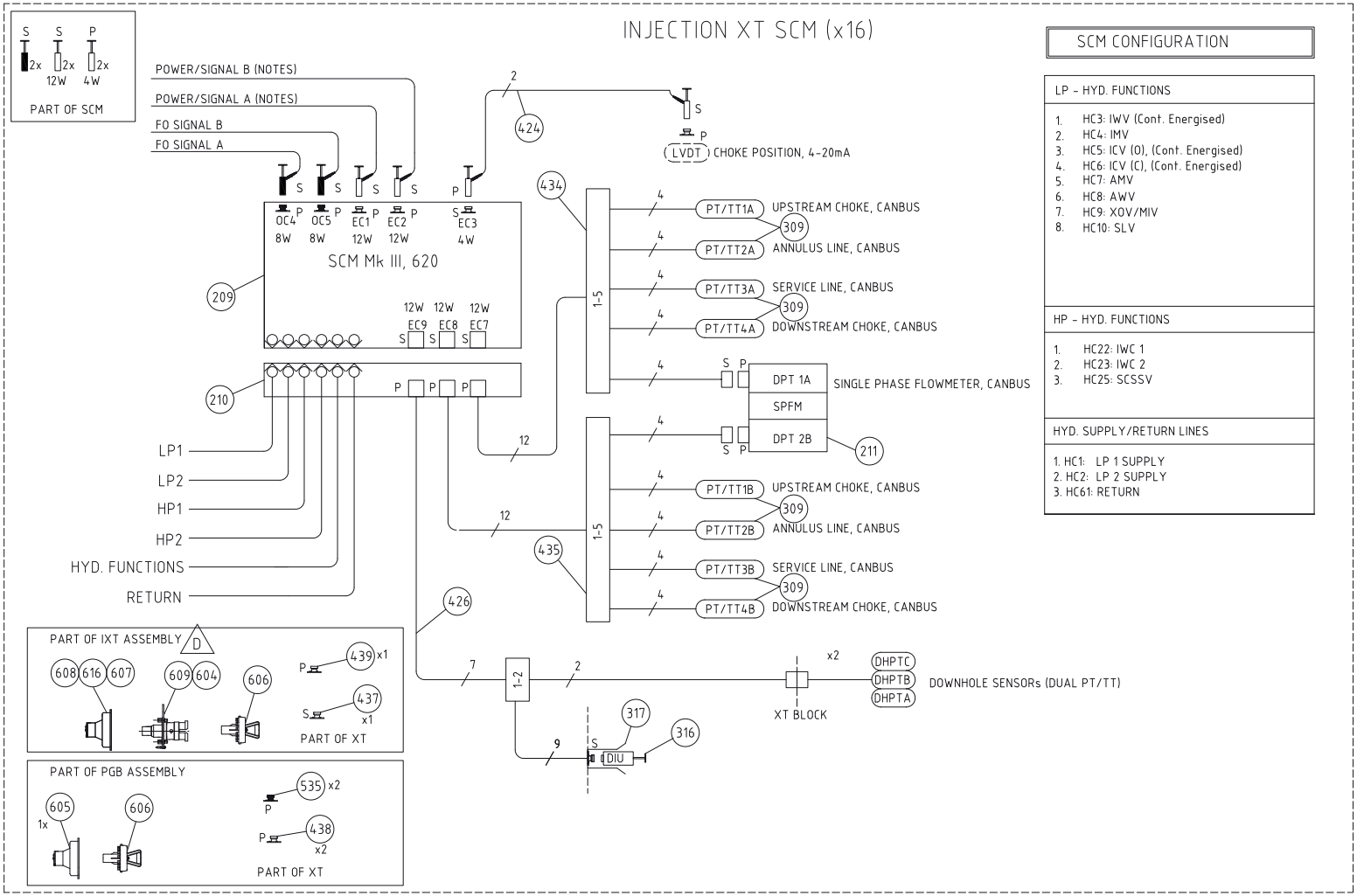

Control System Scope of Supply - WI XT SCM

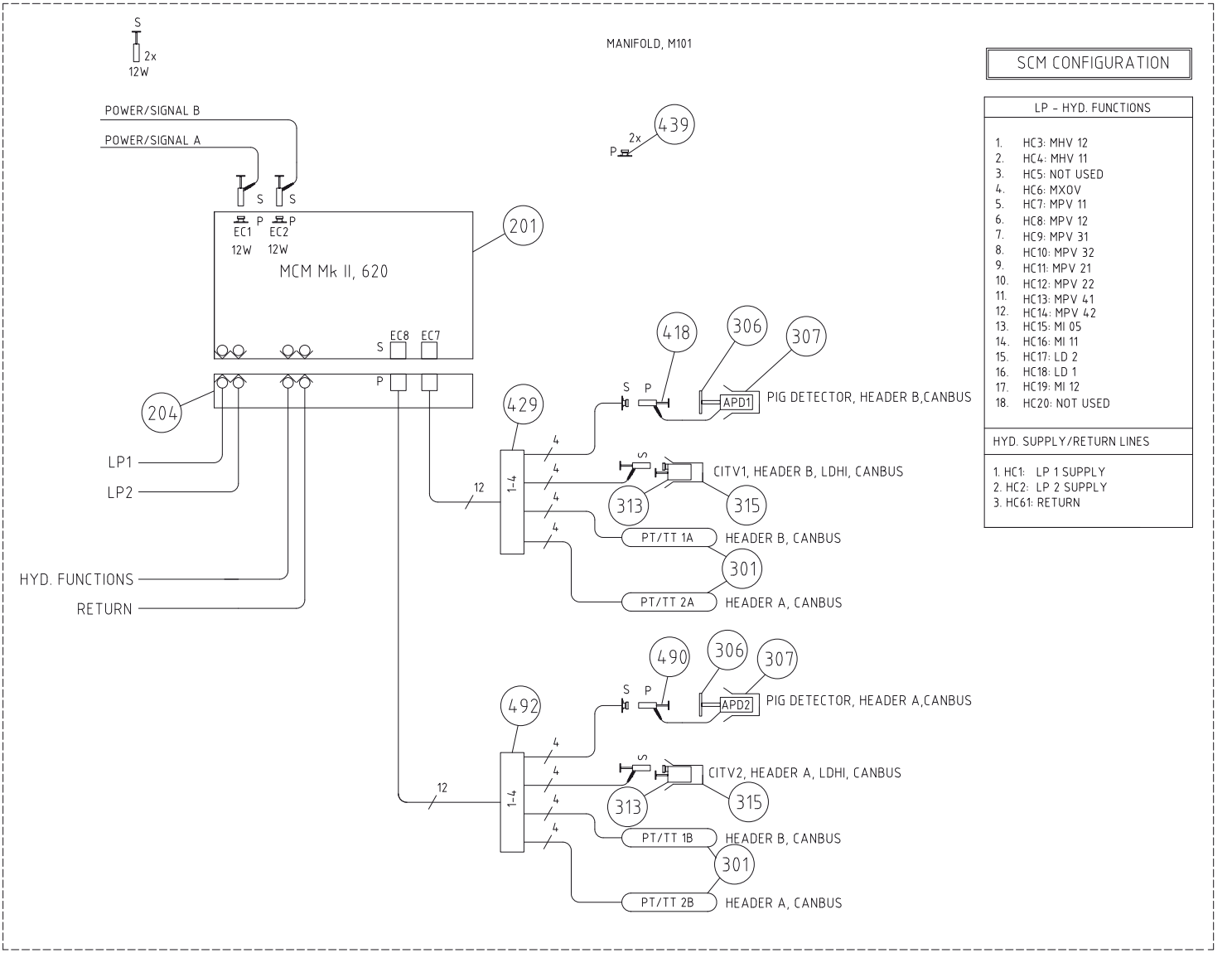

Control System Scope of Supply - Manifold M101 SCM

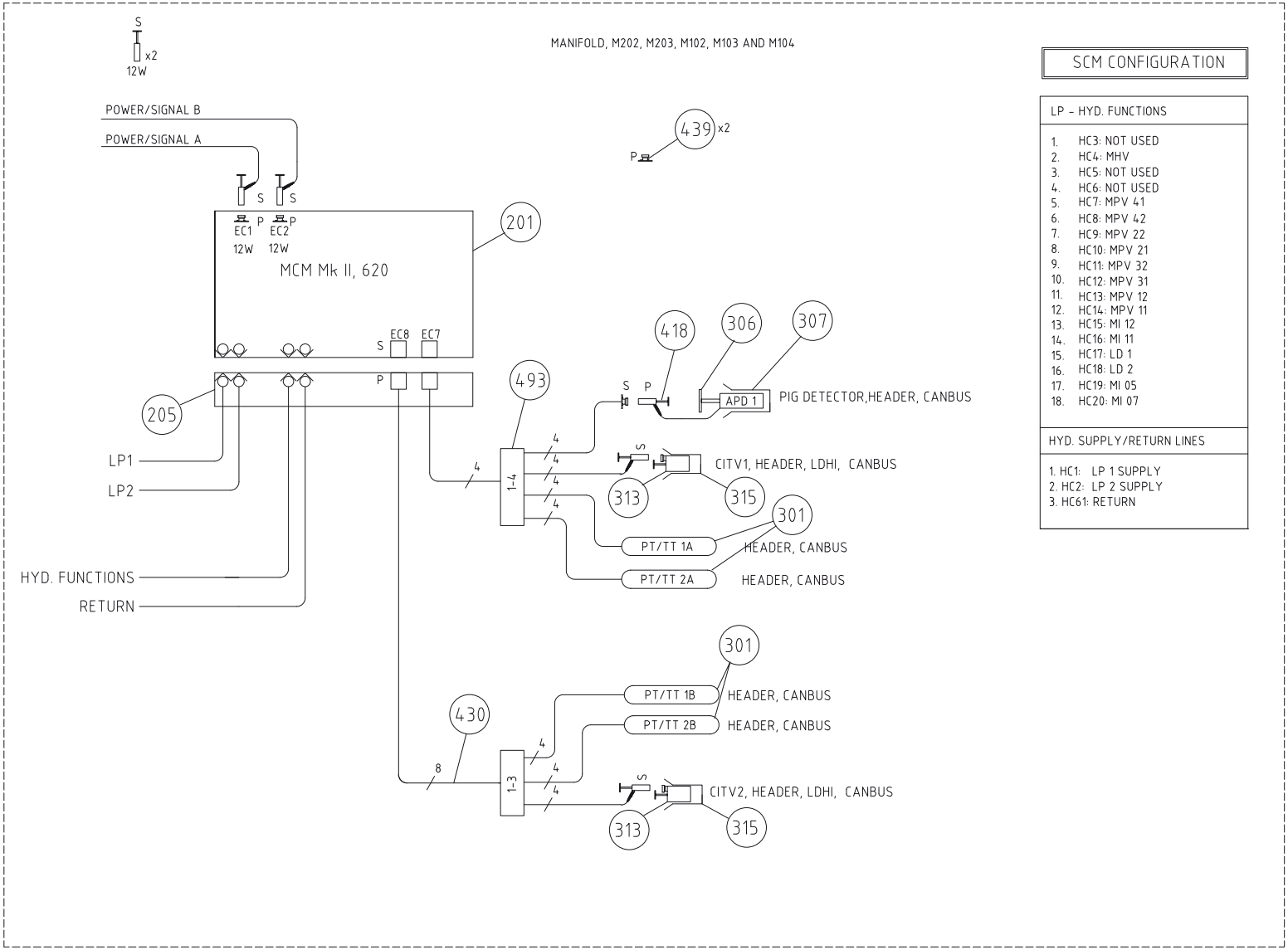

Control System Scope of Supply - Manifold M202, M203, M102, M103 and M104 SCM

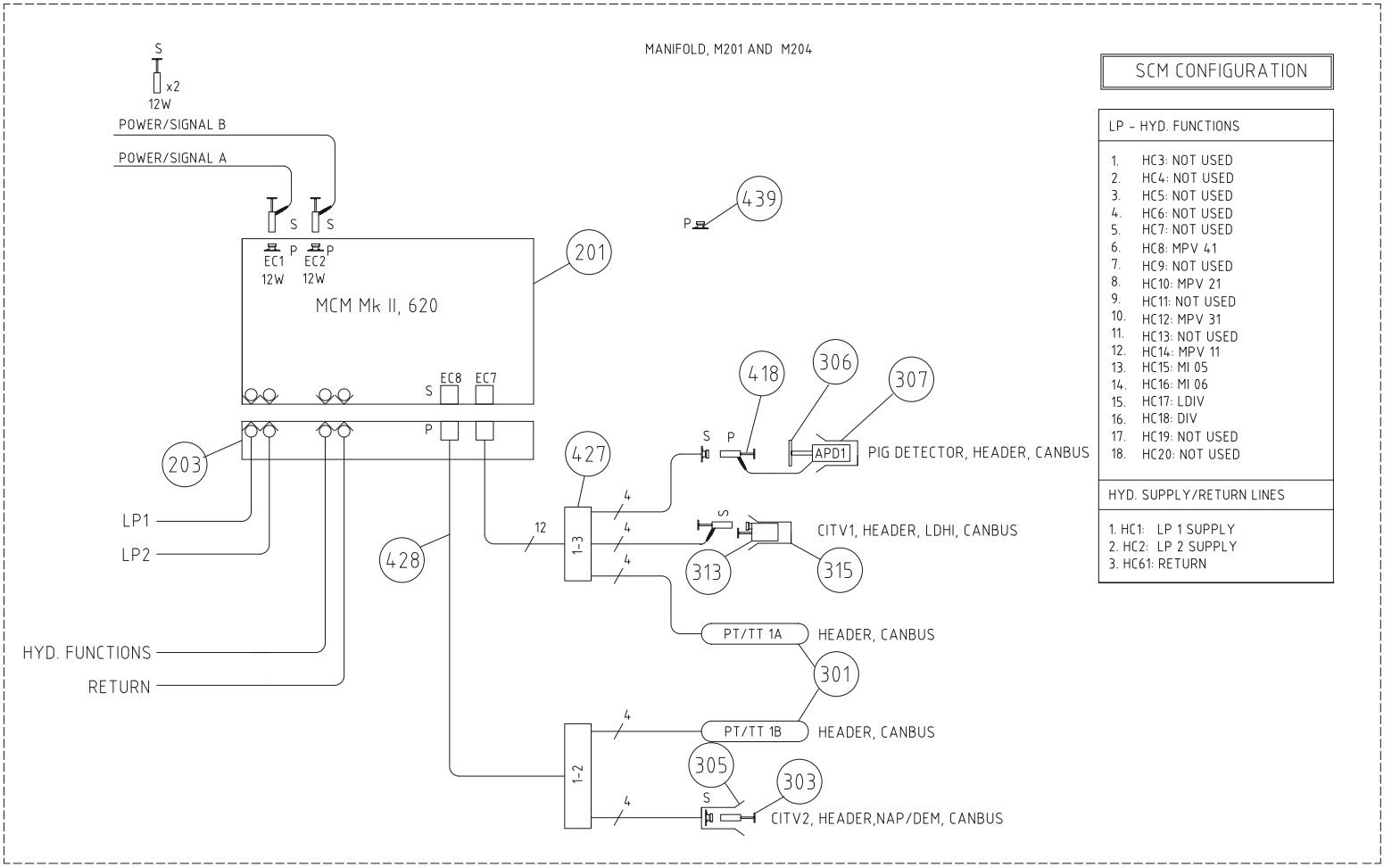

Control System Scope of Supply - Manifold M201 and M204 SCM

ITEM	QTY	QTY, CS	NAME, TYPE, DIMENSION	MATERIAL/PART NO
101	1	-	SCU, SPS Cabinet no. 1	P6000068272
102	1	-	SCU, SPS Cabinet no. 2	P6000088400
103	1	-	SCU, HPU Cabinet	P6000074969
104	2	-	SPCU, 1x8 lines	P6000073682
105	2	-	SPCU, 1x8 lines	P6000082436
106	2	-	SPCU, 1x8 lines	P6000082437
107	2	-	SPCU, 1x8 lines	P6000082438
108	1	-	SCU, network Cabinet	P6000075576
109	1	-	OPERATOR WORKSTATION (OWS), MINITOWER PC, for, SCU Network cab.	P6000074687
110	1	-	ENGINEERING WORKSTATION (EWS), MINITOWER PC, for, SCU Network cab.	P6000074686
111	-	2	ENGINEERING WORKSTATION (EWS), MINITOWER PC	P6000074687
112	1	-	SDPU Cabinet.	P6000084001
113	1	-	ENGINEERING WORKSTATION (EWS), RACKMOUNTED, for SDPU	P6000070387
114	1	-	MPPM Working Station (EWS), RACKMOUNTED, for SDPU	P6000089118
115	1	-	MPPM Working Station (OWS), MINITOWER PC	P6000074591
116	1	-	HPU	P6000075573
117	4	-	TUTU W/HYDRAULIC CONNECTIONS, SPS	P6000073840
118	1	-	TUTU W/HYDRAULIC CONNECTIONS, SIV	P6000073675
119	1	-	TUTU W/HYDRAULIC CONNECTIONS, MPP	P6000073677
120	1	-	ENGINEERING WORKSTATION (EWS), MINITOWER for CCR (SmartTool)	P6000106770
201	8	1	SCM MKII 620, 18P DHP (MCM)	P6000068918
202	16	1	SRM MKII 620	P6000068924
203	2	-	SCMMB MKII, MCM, 18 FUNCTION	P6000069955
204	1	-	SCMMB MKII, MCM, 18 FUNCTION	P6000069957
205	5	-	SCMMB MKII, MCM, 18 FUNCTION	P6000069954
206	16	-	SCMMB MKII, SRM	P6000073457
207	19	3	SCM MKII 620, 11LP & 3HP (PXT)	P6000068902
208	19	1	SCMMB MKII, 13 FUNCTION	P6000069953
209	15	2	SCM MKII 620, 8LP & 5HP (IXT)	P6000068912
210	15	1	SCMMB MKII, 11 FUNCTION	P6000069956
211	15	1	SPPM (VENTURI), 5% FS ACCURACY	P6000071701
212	5	0	MPPM, 65 MM VENTURE	P6000073670
213	12	1	MPPM, 52 MM VENTURE	P6000073671
214	2	0	MPPM, BLIND-T 180 DEGREE ROTATED WITH MIRRORED CONNECTOR PROT.	P6000104538
215	0	2	MPPM ELECTRONIC INSERT	P6000074589
301	28	-	PT/TT, CANBUS, 200 MM, HIGH ACCURACY	P6000070112
302	19	1	CITVLOW LOW FLOW, DUMMY, SKOFLO	P6000072808
303	2	2	CITVLOW LOW FLOW, NAP/DEM, SKOFLO	P6000070136
305	2	-	CITV FUNNEL, NAP/DEM, SKOFLO	P6000075980
306	9	-	APD	P6000070129
307	9	-	APD FUNNEL	TYP. P6000074209
308	76	8	PT/TT, CANBUS, 100 MM, HIGH ACCURACY	PXT Distr. ASSY P6000070110
309	196	16	PT/TT, CANBUS, 100 MM, STD ACCURACY	PXT Distr. ASSY P6000072006
310	19	3	ASD	P6000070128
311	19	1	ASD FUNNEL	P6000070130
312	19	3	CITV, CI/SI, LOW FLOW, SKOFLO	P6000072803
313	33	3	CITV, MEOH/LDHI, HIGH FLOW, ROXAR	P6000070137
314	38	2	CITV FUNNEL, CI/SI & DUMMY, LOW FLOW, SKOFLO	P6000075981
315	33	1	CITV FUNNEL, MEOH/LDHI, HIGH FLOW, ROXAR	P6000073211
316	34	2	DIU (IWCM)	P6000073554
317	34	2	DIU (IWCM) FUNNEL	P6000073056
401	5	4	EFL, 1-1, 04W P ROV, 04W S ROV, 70 M, MANFOLD-ICU	P6000069973
402	3	-	EFL, 1-1, 04W P ROV, 04W S ROV, 70 M, MANFOLD-ICU	P6000073363
403	5	-	EFL, 1-1, 04W P ROV, 04W S ROV, 70 M, MANFOLD-ICU	P6000073367
404	3	-	EFL, 1-1, 04W P ROV, 04W S ROV, 70 M, MANFOLD-ICU	P6000073366
405	5	6	EFL, 1-1, 12W P ROV, 12W S ROV, 70 M, MANFOLD-PXT	P6000073306
406	5	-	EFL, 1-1, 12W P ROV, 12W S ROV, 70 M, MANFOLD-PXT	P6000073377
407	5	-	EFL, 1-1, 12W P ROV, 12W S ROV, 70 M, MANFOLD-PXT	P6000073378
408	5	-	EFL, 1-1, 12W P ROV, 12W S ROV, 70 M, MANFOLD-PXT	P6000073376
409	7	-	EFL, 1-1, 12W P ROV, 12W S ROV, 70 M, MANFOLD-PXT	P6000073375
410	7	-	EFL, 1-1, 12W P ROV, 12W S ROV, 70 M, MANFOLD-PXT	P6000073374
411	1	-	EFL, 1-1, 12W P ROV, 12W S ROV, 70 M, MANFOLD-PXT	P6000073373
412	1	-	EFL, 1-1, 12W P ROV, 12W S ROV, 70 M, MANFOLD-PXT	P6000073372
413	19	2	EFL, 1-2, 12W P ROV, 12W S ROV, 70 M, PXT-MPPM	P6000069971
414	14	4	EFL, 1-1, 04W P ROV, 04W S ROV, 70 M, 4 LINES	P6000069972
415	14	-	EFL, 1-1, 04W P ROV, 04W S ROV, 70 M, 4 LINES	P6000073352
416	1	-	EFL, 1-1, 04W P ROV, 04W S ROV, 70 M, 4 LINES	P6000084185
417	1	-	EFL, 1-1, 04W P ROV, 04W S ROV, 70 M, 4 LINES	P6000084186
418	8	1	EFL, 1-1, 04W P ROV, APD	P6000069968
419	2	-	EFL, 1-1, 12W P ROV, 12W S ROV	P6000092927
420	80	-	EFL, 1-1, 12W P STP, 12W S ROV FLANGED	TYP. P6000063776
421	2	-	EFL, 1-1, 04W P ROV, 04W S ROV	P6000069974
422	-	-	-	-
423	20	-	EFL, 1-1, 04W P STP, 04W S ROV FLANGED	TYP. P6000073204
424	34	2	EFL, 1-1, 04W P ROV, 04W S ROV	P6000069970
425	19	1	EFL, 1-3, 12W P STB, 12W S STB, FLANGED, DG O'BRIAN	P6000069964
426	15	1	EFL, 1-2, 12W P STB, 12W S STB, DG O'BRIAN	P6000080342
427	2	-	SENSOR HARNESS, 1-3, 12W P STB, PT/TT, 04W S STB, 04W S ROV	P6000069963
428	2	-	SENSOR HARNESS, 1-2, 12W P STB, PT/TT, 04W S STB	P6000069961
429	1	-	SENSOR HARNESS, 1-4, 12W P STB, 2xPT/TT, 04W S STB, 04W S ROV	P6000073383
430	5	-	SENSOR HARNESS, 1-3, 12W P STB, 2xPT/TT, 04W S STB	P6000069960
431	19	3	SENSOR HARNESS, 1-1, 04W P ROV, ASD	P6000069969
432	19	2	SENSOR HARNESS, 1-5, 12W P STB, 5xPT/TT, 04W S STB	P6000069962
433	19	2	SENSOR HARNESS, 1-6, 12W P STB, 5xPT/TT, 04W S STB	P6000069958
434	15	1	SENSOR HARNESS, 1-5, 12W P STB, 4xPT/TT, 04W S DIV	P6000069959
435	15	1	SENSOR HARNESS, 1-5, 12W P STB, 4xPT/TT, 04W S DIV	P6000073384
436	4	-	SENSOR HARNESS, 1-1, 12W P ROV, SAMS	P6000087002
437	1	-	ELECTRICAL JUMPER, 1 X 1 LEGS, F/ DISTRIBUTION, EFL, 1-1, MAN ECTA - SCM EC1	P6000120541
438	1	-	ELECTRICAL JUMPER, 1 X 1 LEGS, F/ DISTRIBUTION, EFL, 1-1, MAN ECTB - SCM EC2	P6000120542

ITEM	QTY	QTY, CS	NAME, TYPE, DIMENSION	MATERIAL/PART NO
437	138	4	EL. CONN. 04W S, PARKING	200017689
438	124	6	EL. CONN. 12W P, PARKING	200019152
439	242	3	EL. CONN. 04W P, PARKING	200015548
440	73	4	EL. CONN. 12W S, PARKING	200017702
441	32	-	EL. CONN. 04W S, CABLE GLAND, ARHOURED	P6000085840
442	72	1	EL. CONN. 04W P, LOOPED PROTECTION	P6000062750
443	104	-	EL. CONN. 04W 9, CABLE GLAND	P6000085841
444	116	-	EL. CONN. 04W S, LOOPED PROTECTION	P6000052641
445	10	-	EL. CONN. 04W S, FLANGED ROV, CABLE GLAND	P6000077251
446	-	-	-	-
447	20	-	EL. CONN. 04W P, CABLE GLAND	P6000077252
448	80	-	EL. CONN. 12W P, PROTECTION	200017136
449	122	-	EL. CONN. 04W P, PROTECTION, UNLOOPED	200015708
450	96	-	EL. CONN. 04W S, PROTECTION, UNLOOPED	P6000045363
452	60	-	EL. CONN. 04W S, FLANGE ROV, HOSE	P6000031106
453	2	-	EFL, 1-1, 04W P ROV, 04W S ROV	P6000073226
454	3	-	EFL, 1-1, 04W P ROV, 04W S ROV	P6000073227
455	1	-	EFL, 1-1, 04W P ROV, 04W S ROV	P6000073235
456	4	-	EFL, 1-1, 04W P ROV, 04W S ROV	P6000073244
457	4	-	EFL, 1-1, 04W P ROV, 04W S ROV	P6000073243
458	4	-	EFL, 1-1, 04W P ROV, 04W S ROV	P6000073242
459	4	-	EFL, 1-1, 04W P ROV, 04W S ROV	P6000073241
460	2	-	EFL, 1-1, 04W P ROV, 04W S ROV	P6000073240
461	3	-	EFL, 1-1, 04W P ROV, 04W S ROV	P6000073239
462	1	-	EFL, 1-1, 04W P ROV, 04W S ROV	P6000073238
463	1	-	EFL, 1-1, 04W P ROV, 04W S ROV	P6000073237
464	1	-	EFL, 1-1, 04W P ROV, 04W S ROV	P6000092872
465	2	-	EFL, 1-1, 12W P ROV, 12W S ROV	P6000092929
466	2	-	EFL, 1-1, 04W P ROV, 04W S ROV	P6000073261
467	2	-	EFL, 1-1, 04W P ROV, 04W S ROV	P6000073263
468	4	-	EFL, 1-1, 04W P ROV, 04W S ROV	P6000073249
469	2	-	EFL, 1-1, 04W P ROV, 04W S ROV	P6000073270
470	4	-	EFL, 1-1, 04W P ROV, 04W S ROV	P6000073267
471	1	-	EFL, 1-1, 04W P ROV, 04W S ROV	P6000073269
472	2	-	EFL, 1-1, 04W P ROV, 04W S ROV	P6000073262
473	3	-	EFL, 1-1, 04W P ROV, 04W S ROV	P6000073264
474	1	-	EFL, 1-1, 04W P ROV, 04W S ROV	P6000073265
475	1	-	EFL, 1-1, 04W P ROV, 04W S ROV	P6000073271
476	2	-	EFL, 1-1, 04W P ROV, 04W S ROV	P6000073266
477	2	-	EFL, 1-1, 04W P ROV, 04W S ROV	P6000073268
478	2	-	EFL, 1-1, 04W P ROV, 04W S ROV	P6000073260
479	2	-	EFL, 1-1, 04W P ROV, 04W S ROV	P6000073259
480	2	-	EFL, 1-1, 04W P ROV, 04W S ROV	P6000073258
481	2	-	EFL, 1-1, 04W P ROV, 04W S ROV	P6000073257
482	4	-	EFL, 1-1, 04W P ROV, 04W S ROV	P6000073254
483	4	-	EFL, 1-1, 04W P ROV, 04W S ROV	P6000073253
484	2	-	EFL, 1-1, 04W P ROV, 04W S ROV	P6000073256
485	1	-	EFL, 1-1, 04W P ROV, 04W S ROV	P6000073255
486	5	-	EFL, 1-1, 12W P ROV, 12W S ROV	P6000092930
487	5	-	EFL, 1-1, 04W P ROV, 04W S ROV	P6000092928
488	1	1	EFL, 1-1, 04W P ROV, 04W S ROV	P6000063784
489	1	1	EFL, 1-1, 04W P ROV, 04W S ROV	P6000073216
490	1	1	EFL, 1-1, 04W P ROV, APD	P6000073381
491	19	1	EFL, 1-1, 04W ROV, FOR CITV HIGH FLOW, ROXAR	P6000080357
492	1	-	SENSOR HARNESS, 1-4, 12W P STB, 2xPT/TT, 04W S ROV	P6000076424
493	2,3	-	SENSOR HARNESS, 1-4, 12W P STB, 2xPT/TT, 04W S ROV	P6000069965, P6000093065
501	5	-	OFL, 1-1, 2x08W S ROV, 70 M, 8 LINES	P6000069981
502	5	-	OFL, 1-1, 2x08W S ROV, 70 M, 8 LINES	P6000073391
503	14	2	OFL, 1-1, 2x08W S ROV, 70 M, 1 LINES	P6000069978
504	14	-	OFL, 1-1, 2x08W S ROV, 70 M, 1 LINES	P6000073412
505	1	-	OFL, 1-1, 2x08W S ROV, 70 M, 1 LINES	P6000073411
506	1	-	OFL, 1-1, 2x08W S ROV, 70 M, 1 LINES	P6000073410
507	4	-	FO UMB TERMINATION W/HOSE AND 2x08W P, 16 LINES	P6000077133
508	4	-	FO UMB TERMINATION W/HOSE AND 2x08W P, 16 LINES	P6000077134
509	2	-	OFL W/FO UMB TERMINATION, 2x08W P, 8 LINES	P6000069977
510	2	-	OFL W/FO UMB TERMINATION, 2x08W P, 8 LINES	P6000074326
511	2	-	OFL W/FO UMB TERMINATION, 2x08W P, 6 LINES	P6000074297
512	2	-	OFL W/FO UMB TERMINATION, 2x08W P, 6 LINES	P6000074327
513	2	-	OFL W/FO UMB TERMINATION, 2x08W P, 4 LINES	P6000074296
514	2	-	OFL W/FO UMB TERMINATION, 2x08W P, 4 LINES	P6000074295
515	1	-	OFL W/FO UMB TERMINATION, 2x08W P, 4 LINES	P6000097052
516	1	-	OFL W/FO UMB TERMINATION, 2x08W P, 4 LINES	P6000097055
517	3	-	OFL W/FO UMB TERMINATION, 2x08W P, 2 LINES	P6000069975
518	3	-	OFL W/FO UMB TERMINATION, 2x08W P, 2 LINES	P6000074292
519	1	-	OFL W/FO UMB TERMINATION, 2x08W P, 8 LINES	P6000084412
520	1	-	OFL W/FO UMB TERMINATION, 2x08W P, 8 LINES	P6000084413
521	1	-	OFL W/FO UMB TERMINATION, 2x08W P, 8 LINES	P6000100026
522	1	-	OFL W/FO UMB TERMINATION, 2x08W P, 8 LINES	P6000100027
523	1	-	OFL W/FO UMB TERMINATION, 2x08W P, 8 LINES	P6000100028
524	1	-	OFL W/FO UMB TERMINATION, 2x08W P, 8 LINES	P6000100029
525	1	-	OFL W/FO UMB TERMINATION, 2x08W P, 8 LINES	P6000100031
526	1	-	OFL W/FO UMB TERMINATION, 2x08W P, 8 LINES	P6000100032
527	2	-	OFL W/FO UMB TERMINATION, 2x08W P, 8 LINES	P6000096851
528	2	-	OFL W/FO UMB TERMINATION, 2x08W P, 8 LINES	P6000096850
529	1	-	OFL, 1-2, 3x08W S ROV	P6000073400
530	4	-	OFL, 1-1, 2x08W S ROV, 8 LINES	P6000069983
531	1	-	OFL, 1-2, 3x08W S ROV, 1 LINE	P6000069980
532	1	-	OFL, 1-3, 3x08W S ROV, 08W P FLANGED	P6000073396
533	1	-	OFL, 1-2, 2x08W S ROV, 08W P FLANGED	P6000069979
534	1	-	OFL, 1-1, 2x08W S ROV, 08W P FLANGED, 8 LINES	P6000069982
535	153	-	FO. CONN. 08W P PARKING	200015522
536	74	-	FO. CONN. 08W S PROTECTION, LOOPED	200018831
537	13	-	FO UMB TERMINATION W/HOSE AND 2x08W P, 16 LINES	P6000077149
538	13	-	FO UMB TERMINATION W/HOSE AND 2x08W P, 16 LINES	P6000077148
539	5	-	FO UMB TERMINATION W/HOSE AND 08W P, 8 LINES	P6000074294

ITEM	QTY	QTY, CS	NAME, TYPE, DIMENSION	MATERIAL/PART NO
540	5	-	FO UMB TERMINATION W/HOSE AND 08W P, 8 LINES	P6000074330
541	4	-	OFL, 1-1, 2x08W S, 8 LINES	P6000073385
542	2	-	OFL, 1-1, 2x08W S, 8 LINES	P6000073386
543	1	-	OFL, 1-2 2x08W S, 8 LINES	P6000073394
544	1	-	OFL, 1-2, 2x08W S, 8 LINES	P6000073399
545	2	-	OFL, 1-1, 2x08W S ROV, 8W P FLANGED, 8 LINES	P6000073388
546	1	-	OFL, 1-1, 2x08W S ROV, 8W P FLANGED, 8 LINES	P6000073387
547	1	-	OFL, 1-1, 2x08W S, 1 LINE	P6000073393
548	1	-	OFL, 1-1, 2x08W S, 1 LINE	P6000073392
549	1	-	OFL, 1-2, 2x08W S, 1 LINE	P6000073406
550	1	-	OFL, W/FO UMB TERMINATION, 2x08W P, 8 LINES	P6000096967
551	1	-	OFL, W/FO UMB TERMINATION, 2x08W P, 8 LINES	P6000096968
552	1	-	OFL, 1-2, 2x08W S ROV, 1 LINE	P6000073398
553	1	-	OFL, 1-2, 2x08W S ROV, 1 LINE	P6000073395
554	1	-	OFL, 1-2, 2x08W S ROV, 1 LINE	P6000073404
555	1	-	OFL, 1-2, 2x08W S ROV, 1 LINE	P6000073403
556	1	-	OFL, 1-2, 2x08W S ROV, 1 LINE	P6000073402
557	1	-	OFL, 1-2, 2x08W S ROV, 1 LINE	P6000073401
558	1	-	OFL, 1-2, 2x08W S ROV, 1 LINE	P6000073405
559	70	-	FO CONN, 08W S PROTECTION, UNLOOPED	200017831
601	5	2	HFL, 70M, 5 LINES, MANIFOLD-ICU	P6000069951
602	15	2	HFL, 70M, 5 LINES, ICU-OXT	P6000069952
603	5	-	MQC INBOARD, 5 LINES	P6000069947
604	56	1	MQC OUTBOARD PRESSURE CAP, 5 LINES	P6000069150
605	38	1	MQC INBOARD PARKING, 5 LINES	P6000079610
606	74	2	MQC OUTBOARD, LTPC	100017910
607	34	2	MQC INBOARD, IWOCS, 13 LINES	P6000069146
608	34	2	MQC INBOARDPARKING PLATE, 13 LINES	P6000069145
609	34	2	MQC OUTBOARD LC, IWOCS, 13 LINES	P6000069152
610	-	-	-	-
611	-	-	-	-
612	2	-	MQC MKII OUTBOARD TEST & FLUSHING CAP, 13 LINES	P6000076298
613	15	-	MQC MKII OUTBOARD TEST & FLUSHING CAP, 5 LINES	P6000074231
614	2	-	MQC MKII INBOARD TEST & FLUSHING CAP, 5 LINES	P6000074230
615	35	-	MQC INBOARD, 5 LINES	P6000084513
616	15	1	MQC INBOARD, 5 LINES, IXT	P6000086491
901	4	-	SMART TOOL, LAPTOP, EWS	P6000051562
903	2	-	SCMMB TEST & FLUSHING CAP (DUMMY SCM), MKII	P6000068754
904	2	-	SCMMB TEST & FLUSHING CAP (DUMMY SCM), MKIII	P6000068931
905	2	-	SENSOR SIMULATOR (SESI)	P6000072592
906	2	-	TEST & FLUSHING HPU (TFHPU)	P6000070655
907	3	-	SCM TEST STAND (SCMTS)	P6000068776
908	2	-	SPCTU200e W/FIBER, 620VAC	P6000069203
909	4	-	SAMS, TOPSIDE SYSTEM	P6000070133
910	4	-	SAMS, SUBSEA SYSTEM	P6000070134
911	1	-	EL. TEST CABLE, SPCU - SCM, 50 M, 12W S ROV (FOR ONSHORE USE)	P6000074468
912	3	-	EL. TEST CABLE, SPCU - SCM, 50 M, 12W S ROV (FOR OFFSHORE USE)	P6000074469
913	3	-	EL. TEST CABLE, ST - SCM, 50 M, 12W S ROV (FOR OFFSHORE USE)	P6000074470
914	6	-	TEM SIMULATOR (TEMS) 200e	P6000036581
915	1	-	PORTABLE SEM SIMULATOR (PSEMS)	P6000069155
916	-	-	-	-
917	8	-	EL. TEST CONN - ON PROD. UTH FOR UMBILICAL FAT	200019335
918	8	-	EL. TEST CONN - ON PROD. UTH FOR UMBILICAL FAT	200016960
919	4	-	EL. TEST SET W/TEST CONNECTORS 12WP	200019336
920	-	-	-	-
921	4	-	EL. TEST SET W/TEST CONNECTORS 12WS	P6000032666
922	-	-	-	-
923	-	-	-	-
924	-	-	-	-
925	-	-	-	-
926	-	-	-	-
927	2	-	FO. CONN TEST , 08W, PIN	P6000038340
928	1	-	FO. TEST JUMPER FOR DUMMY ICU	P6000093525
929	6	-	FO. CONN TEST 08W, SOCKET, 10M	P6000038341
930	4	-	MPPM SIMULATOR	P6000072775
932	2	-	SAMS TEST TOOL SET	P6000072765
933	2	-	SIMULATOR LOW FLOW, SKOFLO	P6000072774
934	2	-	CITV LOW FLOW TEST & FLUSHING UNIT, CI/SI & SPARE & NAP/DEM	P6000072808
935	3	-	CITV HIGH FLOW TEST & FLUSHING UNIT, MeOH & LDHI	P6000073212
951	2	-	MPPM SHIPPING FRAME	P6000074592
952	1	-	MPPM TEST AND SHIPPING FRAME	P6000074592
953	2	-	SCM SHIPPING SKID, MKII	100048881
954	1	-	SCM SHIPPING SKID, MKIII	100028733
955	2	-	SPCTU200e W/FIBER, 900VAC	P6000076890
956	2	-	CITV SIMULATOR HIGH FLOW, ROXAR	P6000073980
957	1	-	WTM	P6000080736
958	19	1	WTM PLUG	P6000080722
959	19	1	WTM FUNNEL	P6000080697
960	1	-	WTM CALIBRATION KIT	P6000080723
961	1	-	WTM SW	P6000080724
962	1	-	WTM TOPSIDE PC	P6000084173
963	1	-	WTM STORAGE CONTAINER	P6000084172

Control System Scope of Supply - SoS table

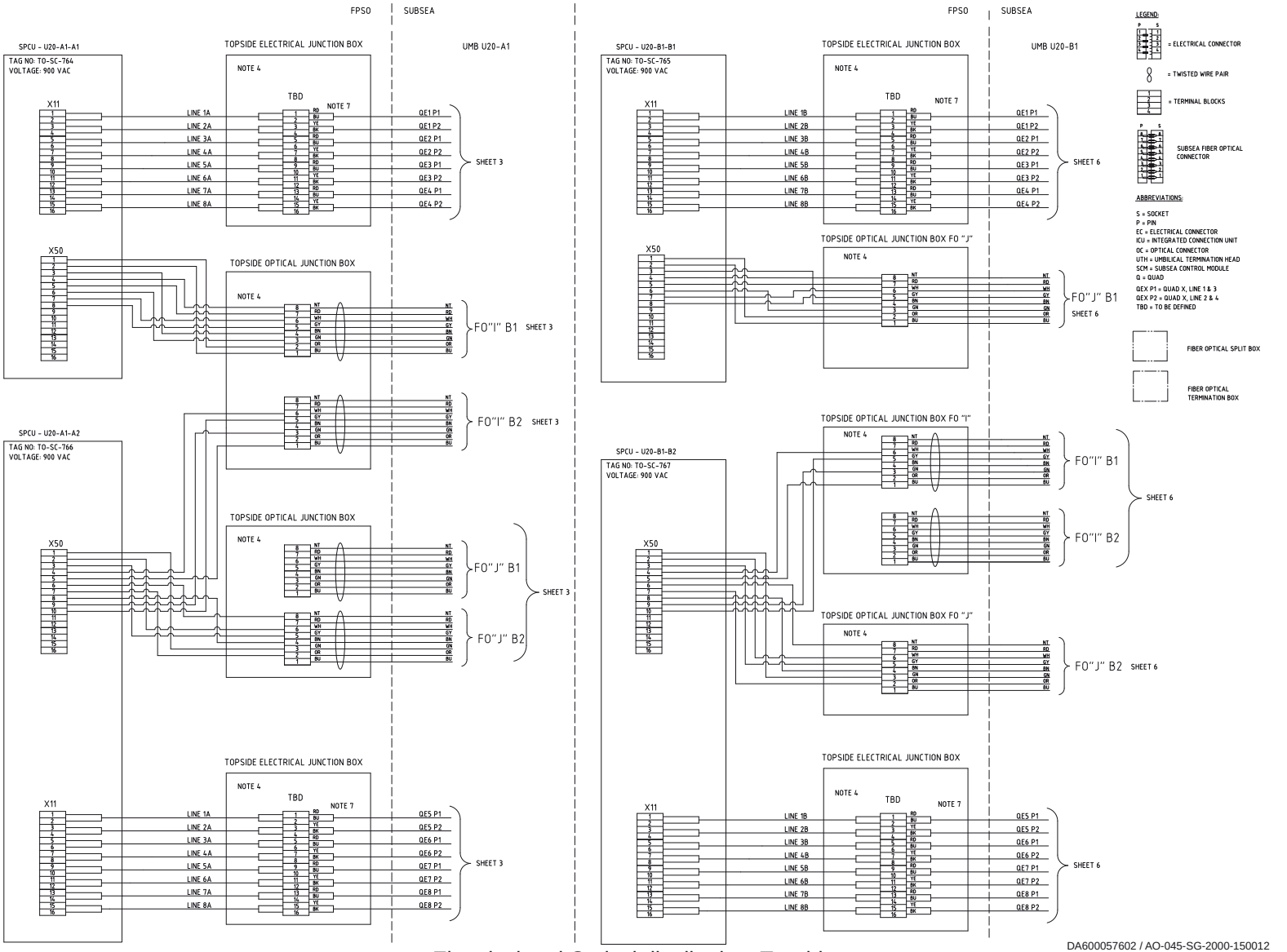

DA600057602 / AO-045-SG-2000-150012

Electrical and Optical distribution, Topside

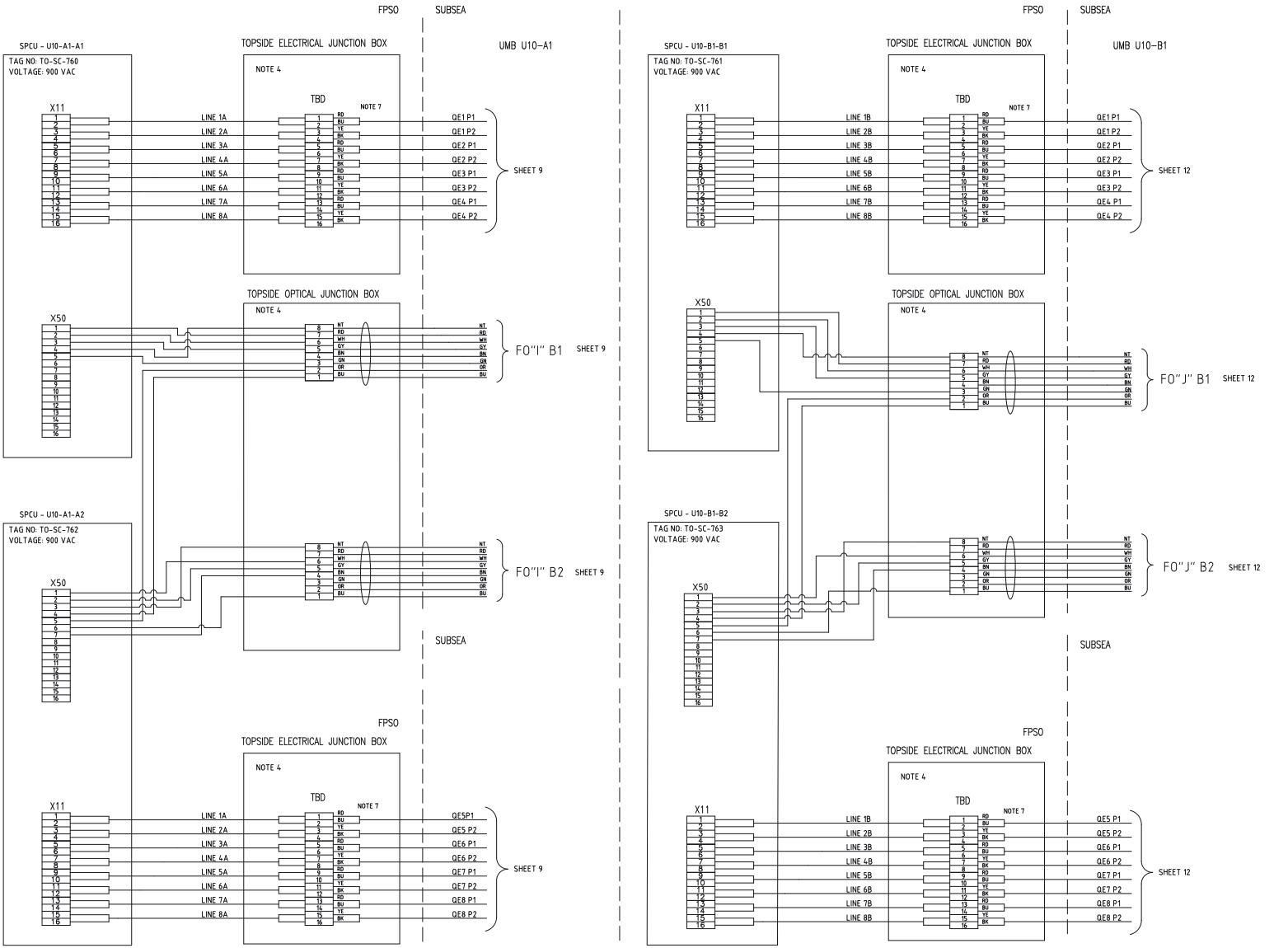

DA600057602 / AO-045-SG-2000-150012

Electrical and Optical distribution, Topside

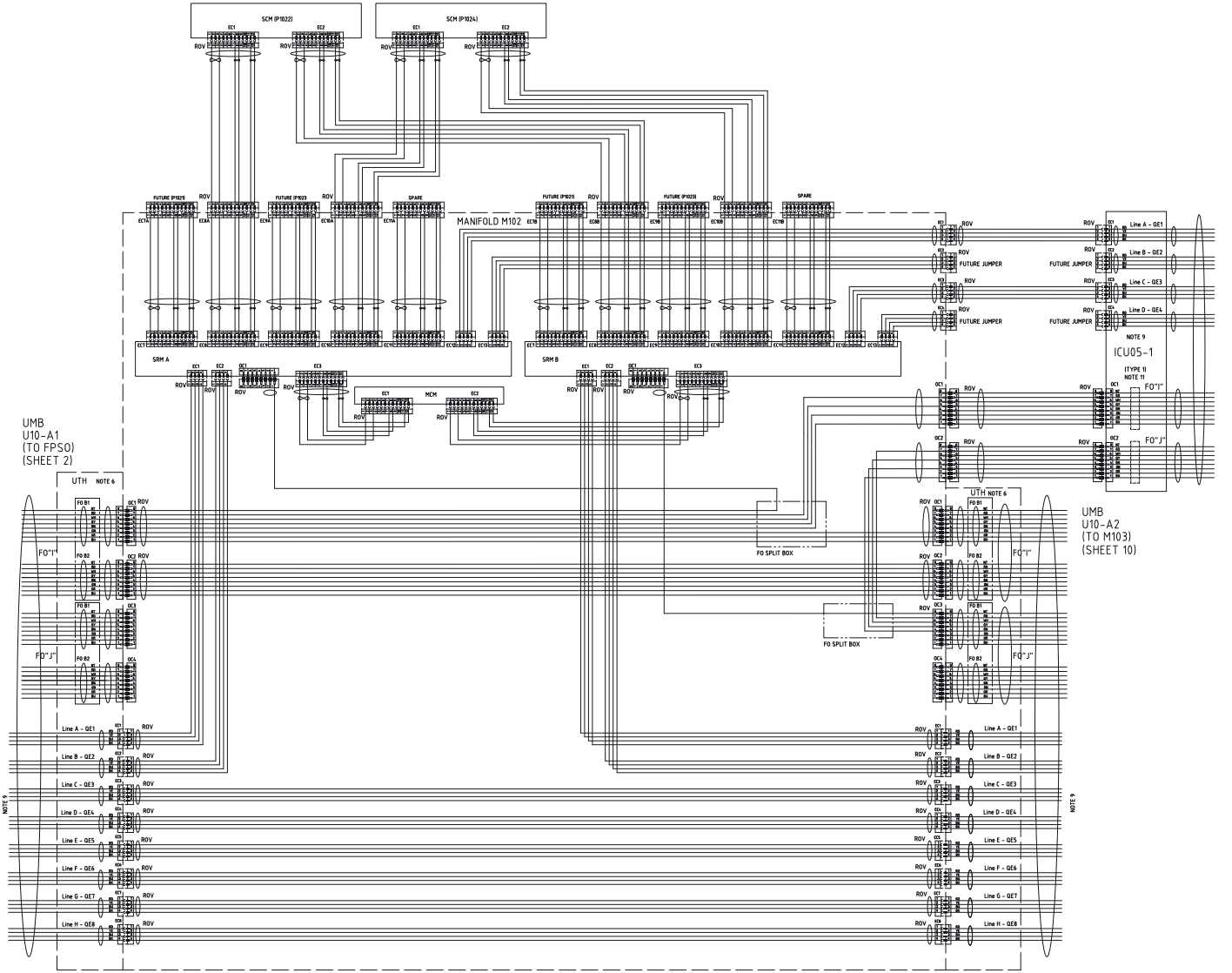

DA600057602 / AO-045-SG-2000-150012

Subsea Electrical and Optical distribution, Single Header

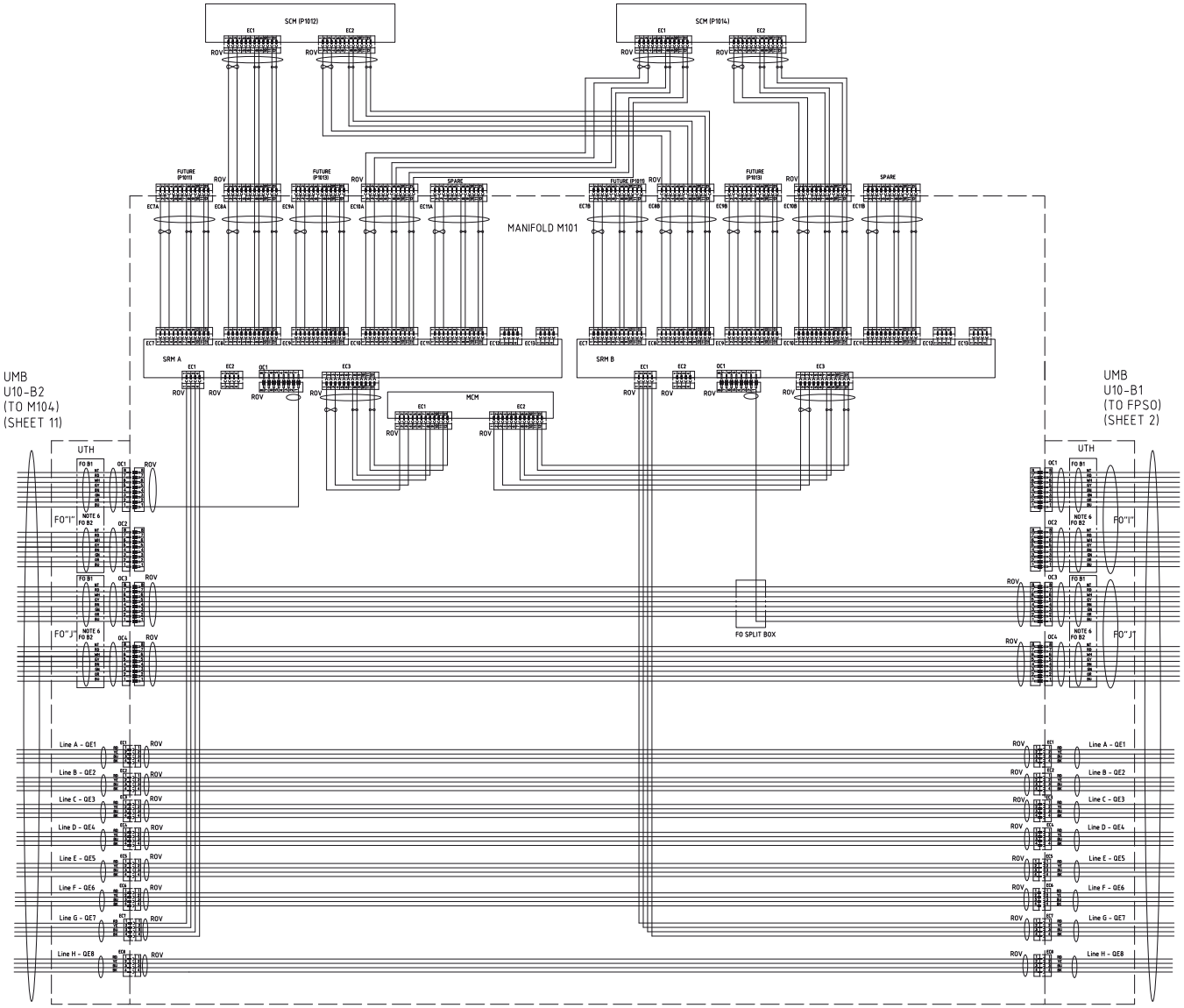

DA600057602 / AO-045-SG-2000-150012

Subsea Electrical and Optical distribution, Dual Header

SRM (Manifold tag)	EC	SCM (XT tag)
SRM A(M101)	EC8A – EC1	P1012
SRM A(M101)	EC9A –	P1013
SRM A(M101)	EC10A – EC1	P1014
SRM A(M101)	EC7A -	P1011
SRM B(M101)	EC8B – EC2	P1012
SRM B(M101)	EC9B –	P1013
SRM B(M101)	EC10B – EC2	P1014
SRM B(M101)	EC7B -	P1011
SRM A(M104)	EC8A – EC1	P1042
SRM A(M104)	EC10A -	P1044
SRM A(M104)	EC7A - EC1	P1041
SRM A(M104)	EC9A - EC1	P1043
SRM B(M104)	EC8B – EC2	P1042
SRM B(M104)	EC10B –	P1044
SRM B(M104)	EC7B - EC2	P1041
SRM B(M104)	EC9B - EC2	P1043
SRM A(M103)	EC7A – EC1	P1031
SRM A(M103)	EC8A – EC1	P1032
SRM A(M103)	EC9A -	P1033
SRM A(M103)	EC10A -	P1034
SRM B(M103)	EC7B – EC2	P1031
SRM B(M103)	EC8B – EC2	P1032
SRM B(M103)	EC9B -	P1033
SRM B(M103)	EC10B -	P1034
SRM A(M102)	EC8A – EC1	P1022
SRM A(M102)	EC10A – EC1	P1024
SRM A(M102)	EC7A -	P1021
SRM A(M102)	EC9A -	P1023
SRM B(M102)	EC8B – EC2	P1022
SRM B(M102)	EC10B – EC2	P1024
SRM B(M102)	EC7B -	P1021
SRM B(M102)	EC9B -	P1023
SRM A(M204)	EC8A – EC1	P2042
SRM A(M204)	EC9A – EC1	P2043

SRM (Manifold tag)	EC	SCM (XT tag)
SRM A(M204)	EC10A – EC1	P2044
SRM A(M204)	EC7A -	P2041
SRM B(M204)	EC8B – EC2	P2042
SRM B(M204)	EC9B – EC2	P2043
SRM B(M204)	EC10B – EC2	P2044
SRM B(M204)	EC7B -	P2041
SRM A(M203)	EC8A – EC1	P2032
SRM A(M203)	EC8A – EC2	P2033
SRM A(M203)	EC7A -	P2031
SRM A(M203)	EC10A -	P2034
SRM B(M203)	EC8B – EC1	P2032
SRM B(M203)	EC9B – EC2	P2033
SRM B(M203)	EC7B -	P2031
SRM B(M203)	EC10B -	P2034
SRM A(M202)	EC8A – EC1	P2022
SRM A(M202)	EC9A – EC1	P2023
SRM A(M202)	EC10A – EC1	P2024
SRM A(M202)	EC7A -	P2021
SRM B(M202)	EC8B – EC2	P2022
SRM B(M202)	EC9B – EC2	P2023
SRM B(M202)	EC7B -	P2021
SRM B(M202)	EC10B – EC2	P2024
SRM A(M201)	EC9A – EC1	P2013
SRM A(M201)	EC10A – EC1	P2014
SRM A(M201)	EC7A –	P2011
SRM A(M201)	EC8A –	P2012
SRM B(M201)	EC9B – EC2	P2013
SRM B(M201)	EC10B – EC2	P2014
SRM B(M201)	EC7B -	P2011
SRM B(M201)	EC8B -	P2012
SRM A(M104)	EC13 – EC3 ICU	I0508
SRM A(M104)	EC13 – EC1	I0507
SRM A(M104)	EC12 – EC1	I1501
SRM A(M104)	EC12 – EC1	I1503

SRM (Manifold tag)	EC	SCM (XT tag)
SRM A(M104)	EC12 – EC3 ICU	I1504
SRM A(M104)	EC12 – EC3 ICU	
SRM A (M104)	EC13 – EC3 ICU	I0508
SRM A (M104)	EC13 – EC1 ICU	I0505
SRM B(M104)	EC12 – EC4 ICU	I1504
SRM B (M104)	EC13 – EC4 ICU	I0506
SRM B (M104)	EC13 – EC2	I0507
SRM B (M104)	EC13 – EC4 ICU	I0508
SRM B (M104)	EC13 – EC2 ICU	I0505
SRM B (M104)	EC12 – EC2	I1501
SRM B (M104)	EC12 – EC2	I0503
SRM B (M104)	EC12- EC4 ICU	I1502
SRM A (M102)	EC12 – EC1	I0502
SRM A (M102)	EC12 – EC1	I0503
SRM A (M102)	EC12 – EC3 ICU	I0501
SRM A (M102)	EC12 – EC3 ICU	I0504
SRM B (M102)	EC12 – EC2	I0502
SRM B (M102)	EC12 – EC2	I0503
SRM B (M102)	EC12 – EC4 ICU	I0501
SRM B (M102)	EC12 – EC4 ICU	I0504
SRM A(M204)	EC13 – EC1	I3501
SRM A(M204)	EC13 – EC1	I3502
SRM A(M204)	EC13 – EC3 ICU	I3503
SRM A(M204)	EC12 – EC1	I3504
SRM A(M204)	EC12 – EC1	I3506
SRM A(M204)	EC12 – EC3 ICU	I3507
SRM A(M204)	EC12 – EC3 ICU	
SRM B(M204)	EC13 – EC2	I3501
SRM B(M204)	EC13 – EC2	I3502
SRM B(M204)	EC13 – EC4 ICU	I3503
SRM B(M204)	EC12 –EC2	I3504
SRM B(M204)	EC12 – EC2	I3506
SRM B(M204)	EC12 – EC4 ICU	I3507
SRM B(M204)	EC12 – EC4 ICU	I3505

SRM (Manifold tag)	EC	SCM (XT tag)
SRM A(M203)	EC12 – EC1	I2508
SRM A(M203)	EC12 – EC1	I2507
SRM B(M203)	EC12 – EC2	I2508
SRM B(M203)	EC12 – EC2	I2507
SRM A(M202)	EC12 – EC1	I2505
SRM A(M202)	EC12 – EC1	I2503
SRM A(M202)	EC12- EC3 ICU	I2506
SRM A(M202)	EC12- EC3 ICU	
SRM A(M202)	EC13 – EC1	I2501
SRM A(M202)	EC13 – EC3 ICU	I2502
SRM B(M202)	EC12 – EC2	I2505
SRM B(M202)	EC12 – EC4 ICU	I2506
SRM B(M202)	EC12 – EC2	I2503
SRM B(M202)	EC12 – EC4 ICU	I2504
SRM B(M202)	EC12 - EC3 ICU	I2503
SRM B(M202)	EC13 – EC4 ICU	I2502
SRM B(M202)	EC13 – EC2	I2501

Power Distribution SRM-WELLS

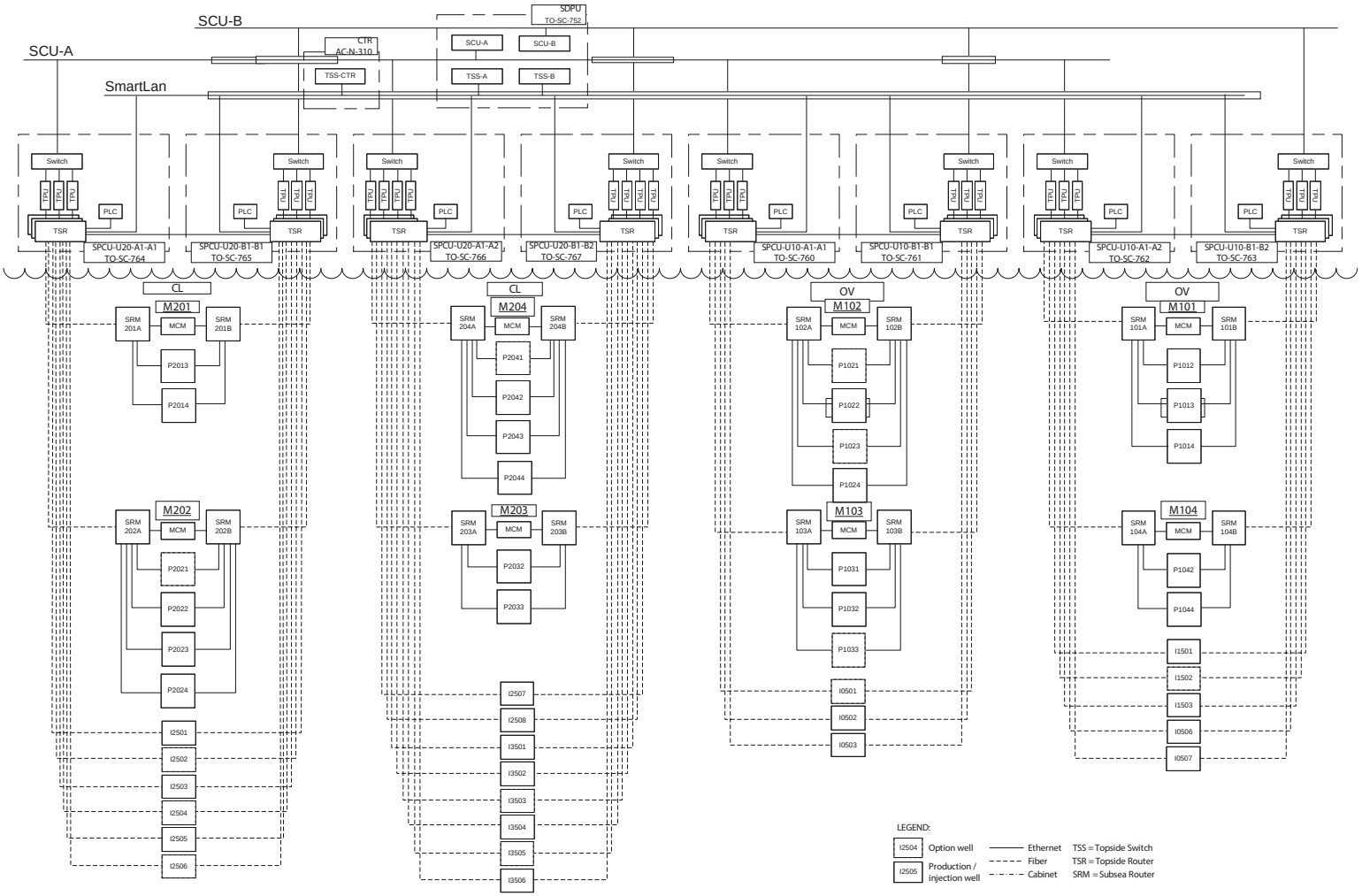

SPC60067806 / AO-045-SG-2000-150238

Network topology Block Diagram

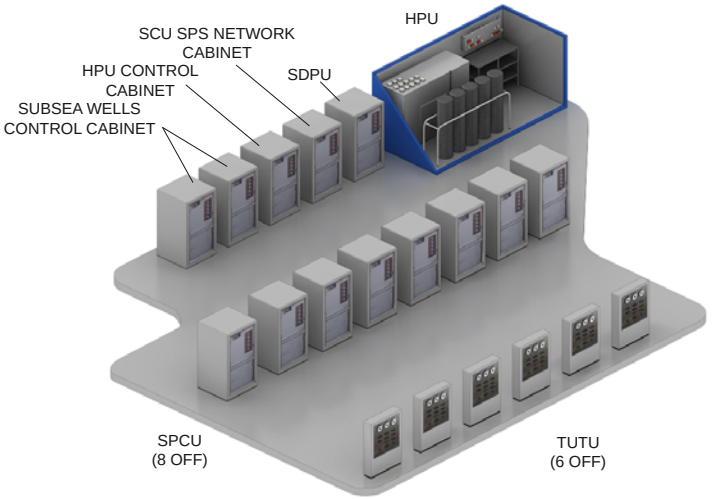

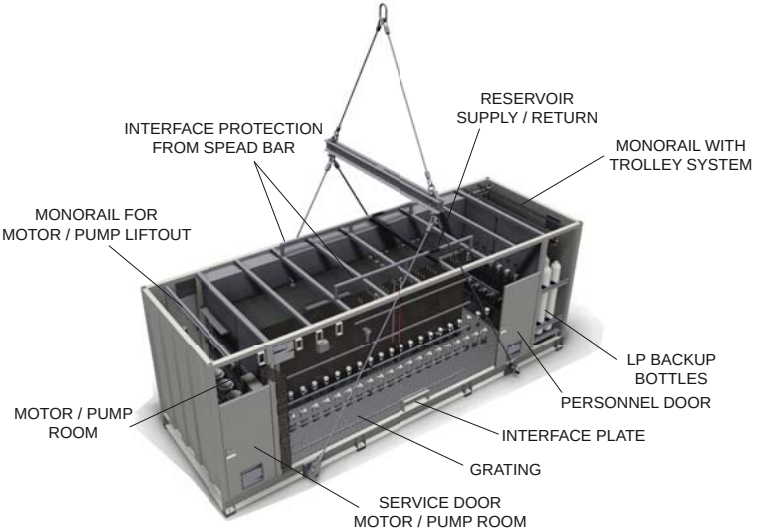

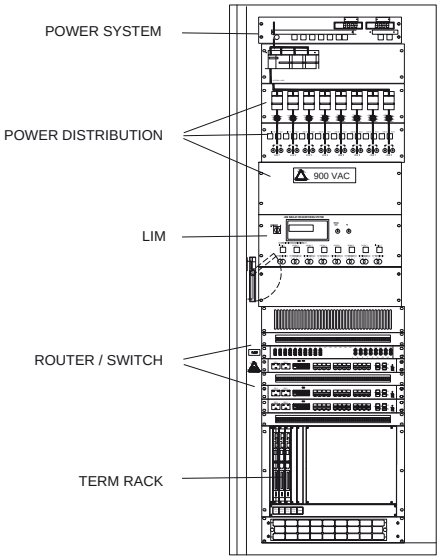

FRONT VIEW SWING FRAME

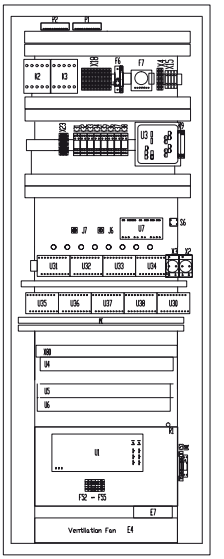

REAR VIEW SWING FRAME

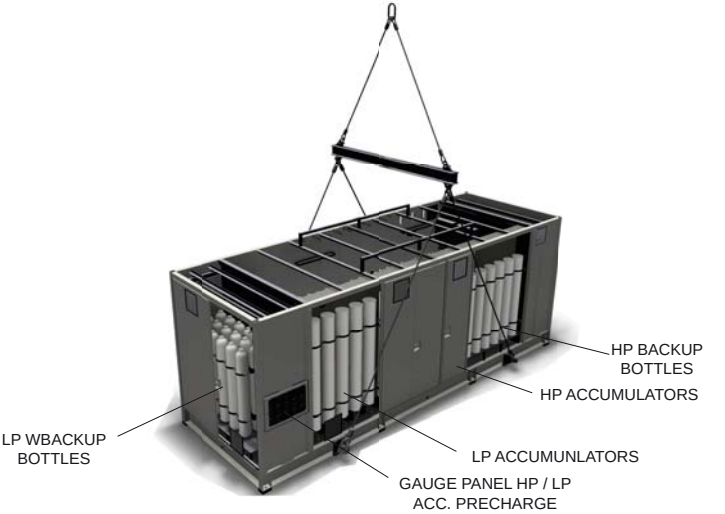

Note: Oceanic HW443

Topside cabinets, typical SPCU

Topside HPU

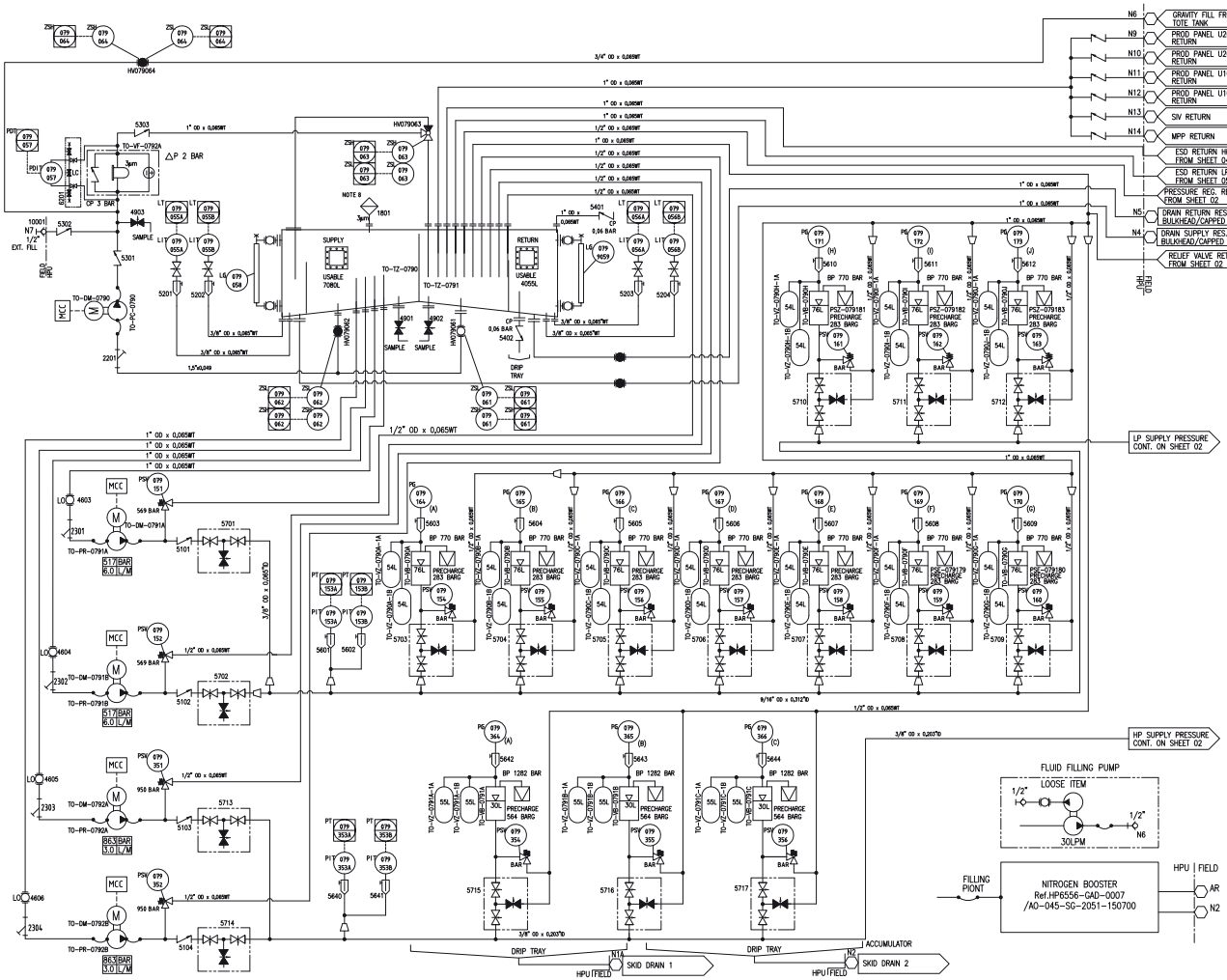

NOZZLE No.	DECRIPTION	SIZE/TYPE
N1A	PHPU DRAIN A	1" NPT
N1B	PHPU DRAIN B	1" NPT
N2	ACC ROOM DRAIN	1" NPT
N3	MOTOR/PUMP ROOM DRAIN	1" NPT
N4	DRAIN SUPPLY RESERVOIR	1" BULKHEAD/CAPPED
N5	DRAIN RETURN RESERVOIR	1" BULKHEAD/CAPPED
N6	FILL FROM TOTE TANK	3/4" BULKHEAD
N7	EXTERNAL FILL	1/2" SNAPTITE MALE
N8	AIR SUPPLY	1/2" BULKHEAD
N9	TEST RETURN, PROD. PANEL A	9/16" AUTOCLAVE
N10	TEST RETURN, PROD. PANEL B	9/16" AUTOCLAVE
N11	TEST RETURN, PROD. PANEL C	9/16" AUTOCLAVE
N12	TEST RETURN, PROD. PANEL D	9/16" AUTOCLAVE
N13	TEST RETURN, SIV PANEL	1" AUTOCLAVE
N14	TEST RETURN, MPP PANEL	1" AUTOCLAVE

NOTES:

1. KEY:
   - HYDRAULIC LINE
   - ELECTRIC SIGNAL
   - ELECTRIC LINE
   - MODULE/PANEL LIMITS
   - PNEUMATIC LINE
   - NEEDLE VALVE NORMALLY OPEN
   - NEEDLE VALVE NORMALLY CLOSED
   - BALL VALVE NORMALLY OPEN
   - BALL VALVE NORMALLY CLOSED
   - BULKHEAD CONNECTION
   - REDUCTION IN TUBE SIZE
   - STRAINER
   - PISTON ACCU
   - REGULATOR
   - BLADDER ACCU
   - BREATHER
   - BURST DISC
   - RELIEF VALVE
   - CHECK VALVE
   - FILTER
2. ALL TUBING TO SEAMLESS 316 STAINLESS STEEL TO ASTM A213/A269.
3. TUBE FITTINGS TO BE AUTOCLAVE FOR HYDRAULIC SUPPLY LINES
   PARKER TWIN FERRULE TO BE USED ON RETURN AND CIRCULATION LINES
   THREAD SEALANT LOCTITE TYPE 577 - PTFE TAPE NOT TO BE USED.
   HYDRAULIC FLUID:- OCEANIC HW443
   PUMP OIL : CASTROL ALPHASYN PG 150 LUBRICATION OIL
   ACCUMULATOR GAS: NITROGEN
4. REFERENCE DRAWINGS:
   SPC4006368T/AO-045-SG-2000-150061 HPU SPECIFICATION
   HP6556-GAD-0001/AO-045-SG-2051-000007: GENERAL ARRANGEMENT DWG.
   HP6556-GAD-0002/AO-045-SG-2051-000008: INTERFACE & ENVELOPE DWG.
   HP6556-IDX-0001/AO-045-SG-2002-120734 INSTRUMENT INDEX/SIGNAL LIST
   HP6556-PAL-0001/AO-045-SG-2051-000006 LIST OF MATERIALS
   HP6556-PID-0001/AO-045-SG-2051-000009 HYDRAULIC SCHEMATIC
   HP6556-PID-0002/AO-045-SG-2051-TBA PIPING AND INSTRUMENT DIAGRAM
   HP6556-SID-0001/AO-045-SG-2002-120735 SINGLE LINE DIAGRAM
   HP6556-TER-0001/AO-045-SG-2002-120733 ELECTRICAL TERMINATION DWG.
5. ELECTRICAL POWER 3 PHASE 400VAC 50 Hz.
6. UTILITY AIR FOR FILLING PUMP
   REG AIR PRESSURE 6 BAR 14L/SEC
7. PHPU P/N P6000071573
   SLING P/N : P6000071572
   PUMP AIR OPERATED P/N : P6000077991
8. BREATHER:
   OUTLET TO BE OUTSIDE THE CONTAINER

HP6556-PID-0002 / AO-045-SG-2051-150406

HPU schematic

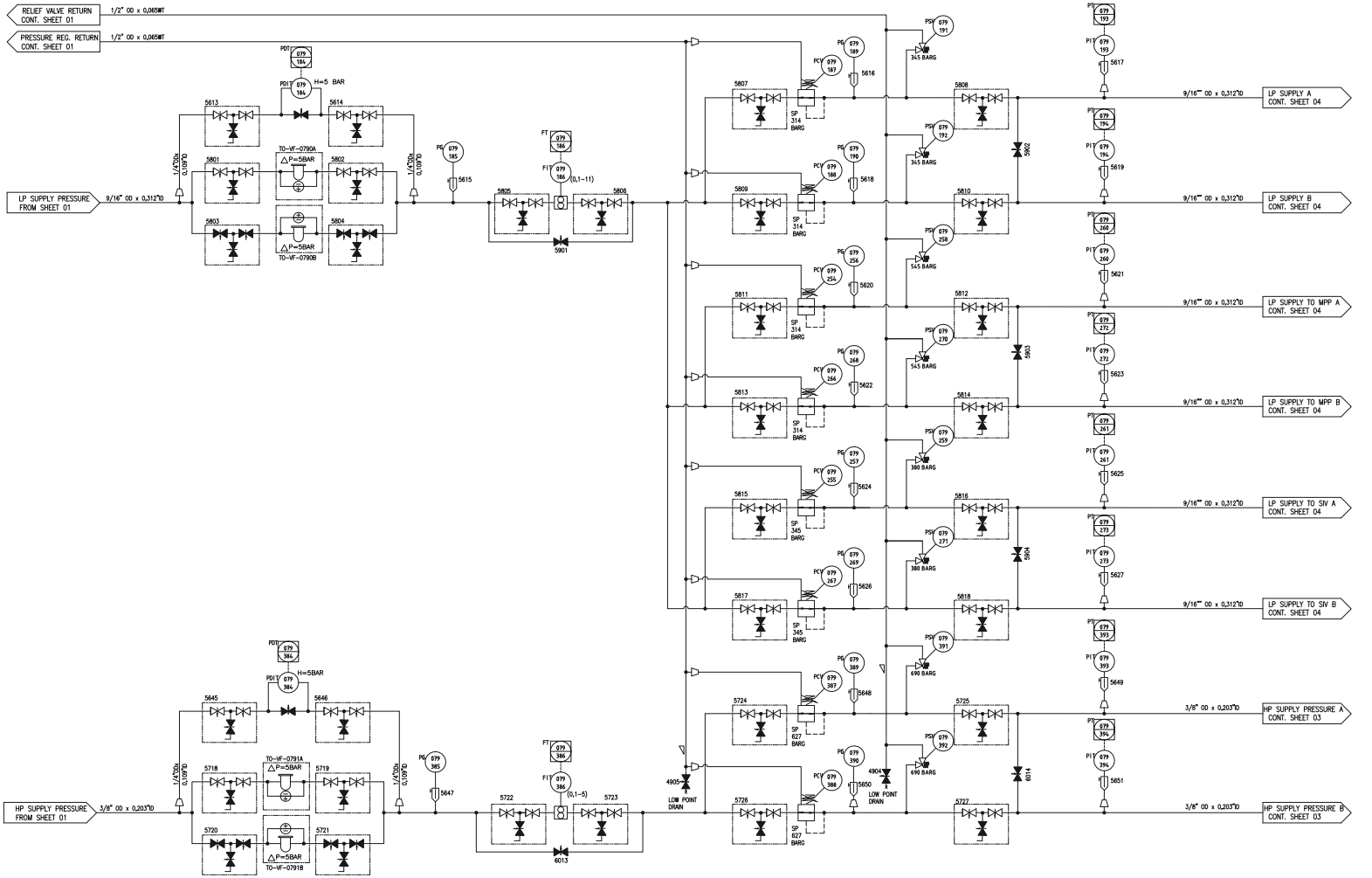

HP6556-PID-0002 / AO-045-SG-2051-150406

HPU schematic

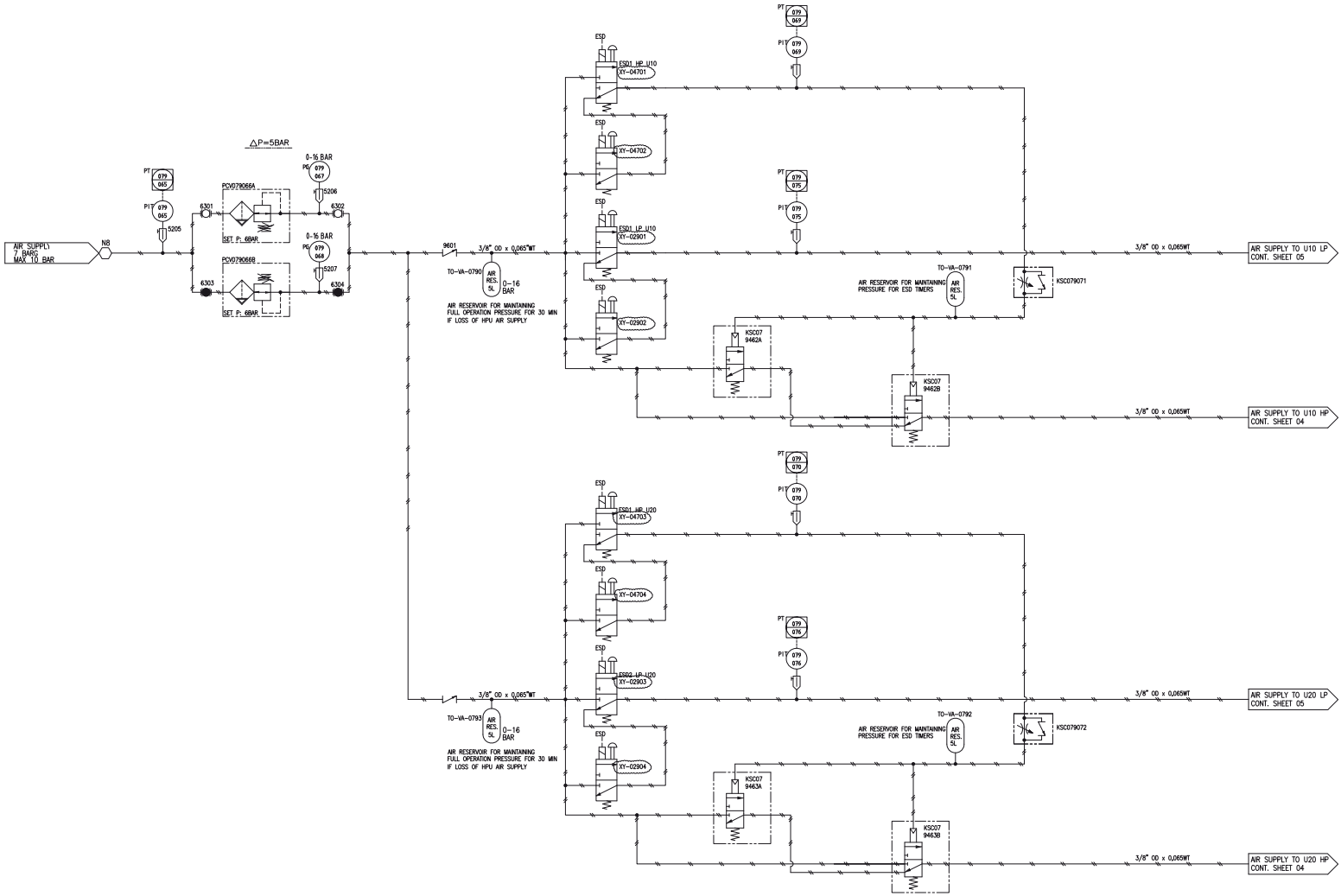

HP6556-PID-0002 / AO-045-SG-2051-150406

HPU schematic

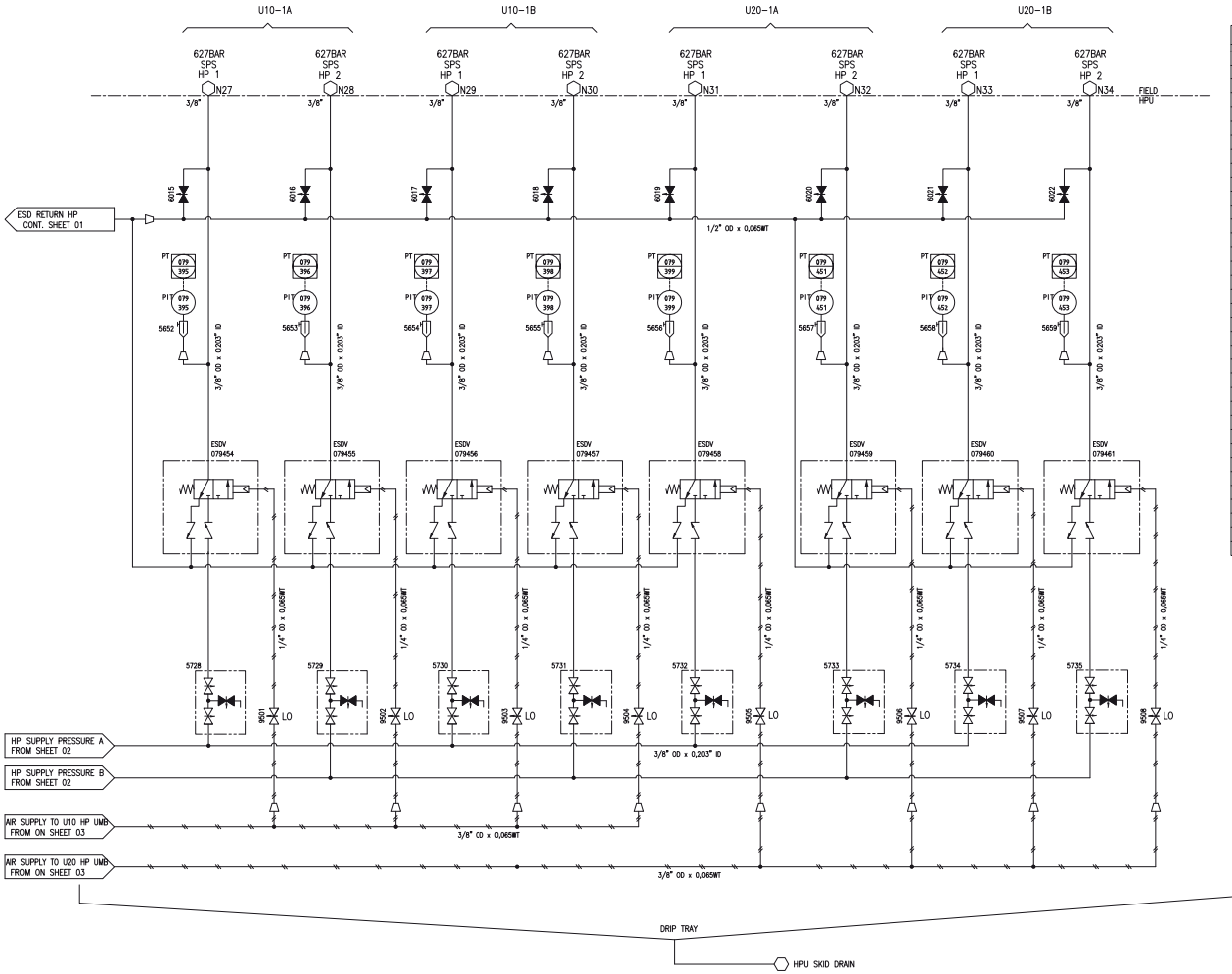

NOZZLE LIST		
NOZZLE No.	DESCRIPTION	SIZE / TYPE
N1A	PHPU DRAIN A	1" NPT
N1B	PHPU DRAIN B	1" NPT
N2	ACC. ROOM DRAIN	1" NPT
N3	MOTOR/PUMP ROOM DRAIN	1" NPT
N4	DRAIN SUPPLY RESERVOIR	1" BULKHEAD/CAPPED
N5	DRAIN RETURN RESERVOIR	1" BULKHEAD/CAPPED
N6	FILL FROM TOTE TANK	3/4" BULKHEAD
N7	EXTERNAL FILL	1/2" SNAPTITE MALE
N8	AIR SUPPLY	1/2" BULKHEAD
N9	TEST RETURN, PROD. PANEL A	9/16" AUTOCLAVE
N10	TEST RETURN, PROD. PANEL B	9/16" AUTOCLAVE
N11	TEST RETURN, PROD. PANEL C	9/16" AUTOCLAVE
N12	TEST RETURN, PROD. PANEL D	9/16" AUTOCLAVE
N13	TEST RETURN, SIV PANEL	1" AUTOCLAVE
N14	TEST RETURN, MPP PANEL	1" AUTOCLAVE
N15	SPS LP1, U10-1A	9/16" AUTOCLAVE
N16	SPS LP2, U10-1A	9/16" AUTOCLAVE
N17	SPS LP1, U10-1B	9/16" AUTOCLAVE
N18	SPS LP2, U10-1B	9/16" AUTOCLAVE
N19	SPS LP1, U20-1A	9/16" AUTOCLAVE
N20	SPS LP2, U20-1A	9/16" AUTOCLAVE
N21	SPS LP1, U20-1B	9/16" AUTOCLAVE
N22	SPS LP2, U20-1B	9/16" AUTOCLAVE
N23	SIV LP1, SIV UMB	1" AUTOCLAVE
N24	SIV LP2, SIV UMB	1" AUTOCLAVE
N25	MPP LP1, MPP UMB	1" AUTOCLAVE
N26	MPP LP2, MPP UMB	1" AUTOCLAVE
N27	SPS HP1, U10-1A	3/8" AUTOCLAVE
N28	SPS HP2, U10-1A	3/8" AUTOCLAVE
N29	SPS HP1, U10-1B	3/8" AUTOCLAVE
N30	SPS HP2, U10-1B	3/8" AUTOCLAVE
N31	SPS HP1, U20-1A	3/8" AUTOCLAVE
N32	SPS HP2, U20-1A	3/8" AUTOCLAVE
N33	SPS HP1, U20-1B	3/8" AUTOCLAVE
N34	SPS HP2, U20-1B	3/8" AUTOCLAVE

HP6556-PID-0002 / AO-045-SG-2051-150406

HPU schematic

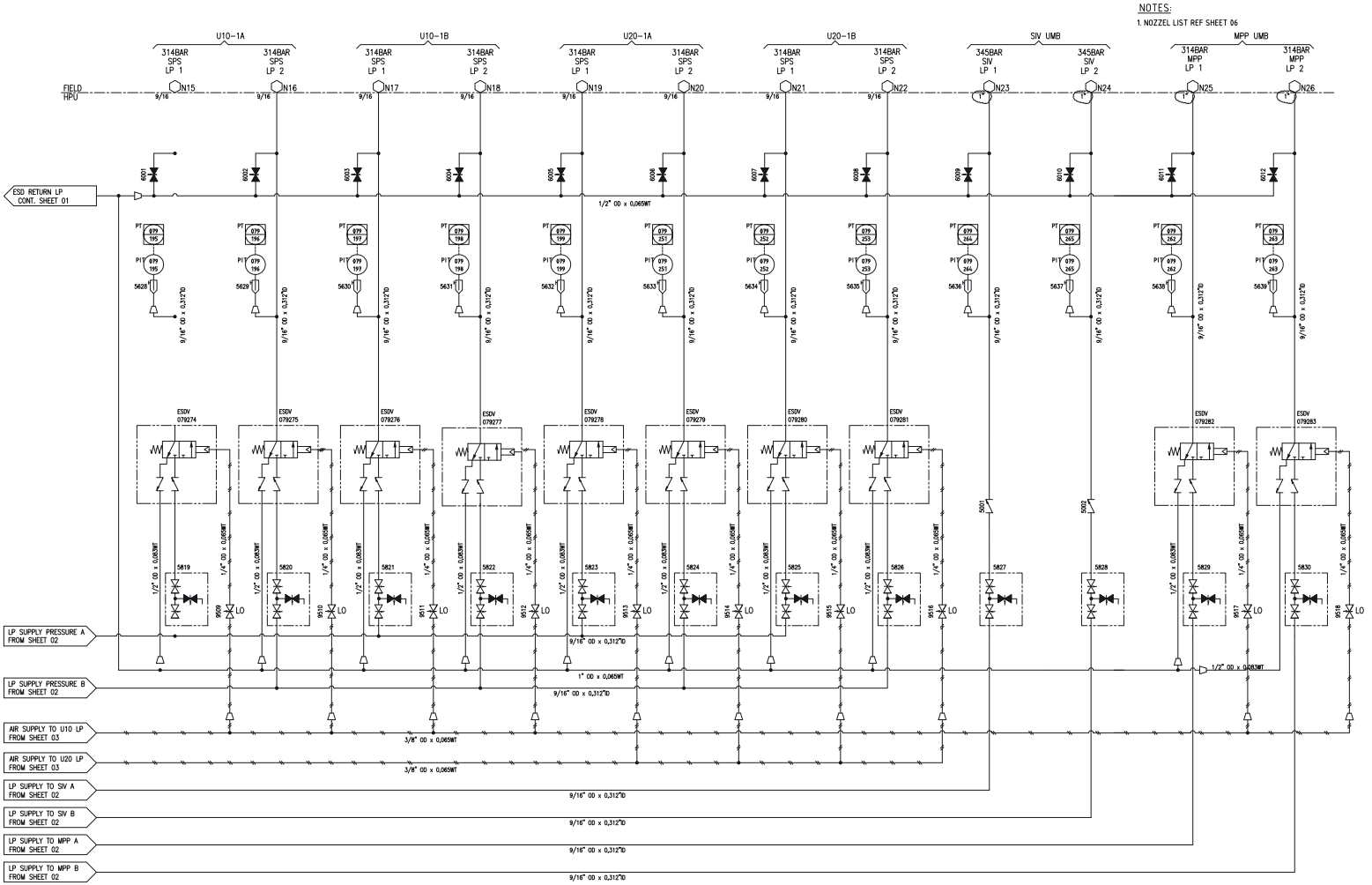

HP6556-PID-0002 / AO-045-SG-2051-150406

HPU schematic

NOTES

04. Wellhead and Tubing Hanger System

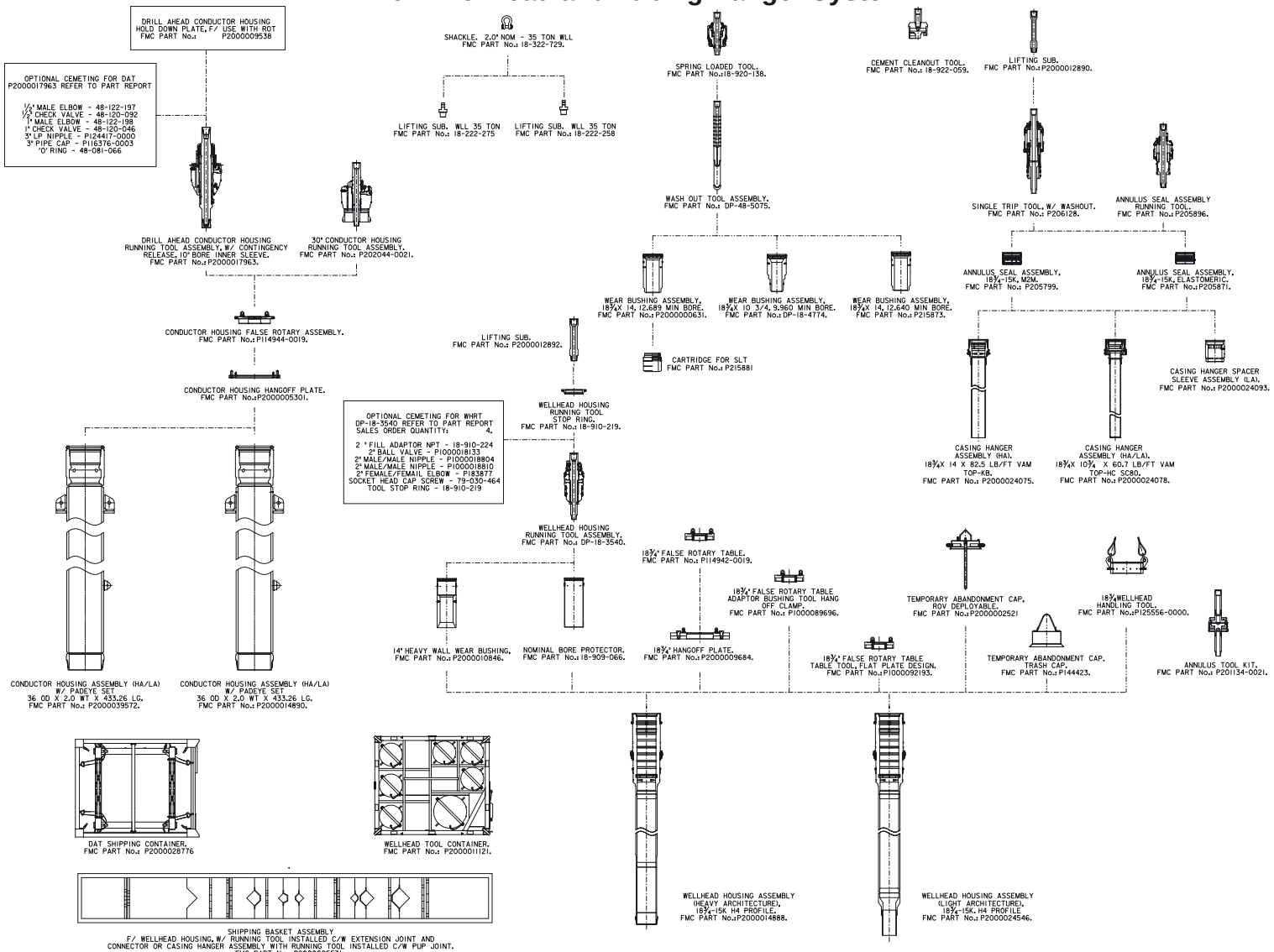

Wellhead Scope of Supply

ROTATION AND ORIENTATION TOOL FOR INSTALLATION OF PGB

INSTALLATION TOOL FOR INSULATION RING

ROTATION AND ORIENTATION TOOL w/ SLING

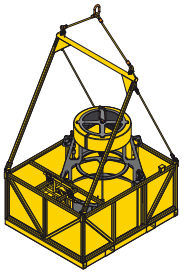

BASKET FOR INSULATION RING AND INSTALLATION TOOL

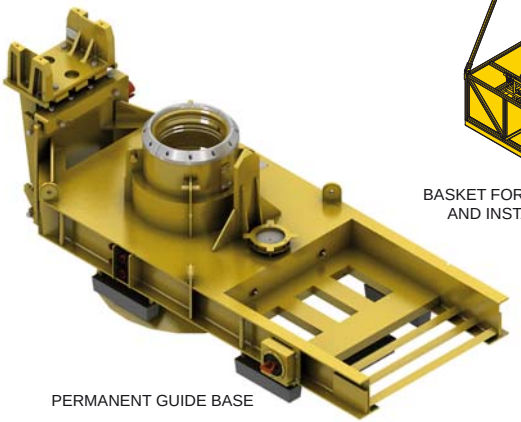

PERMANENT GUIDE BASE

PGB Scope of Supply

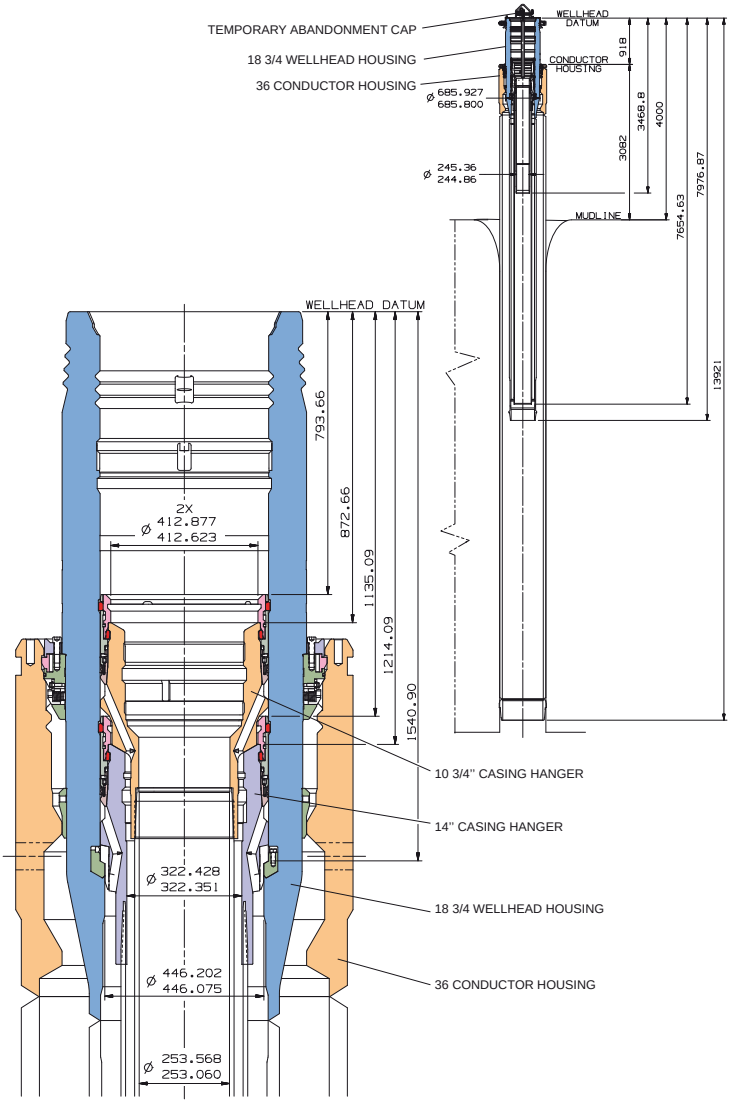

Wellhead System Stackup Layout, Heavy Architecture

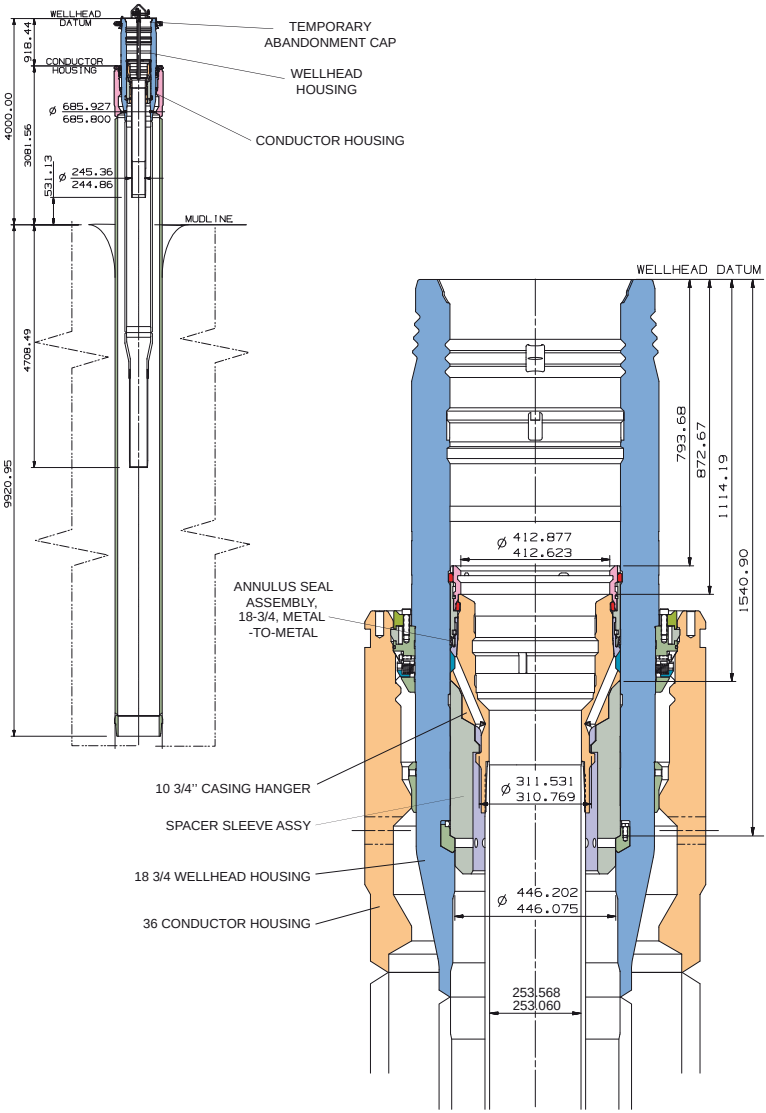

Wellhead System Stackup Layout, Light Architecture

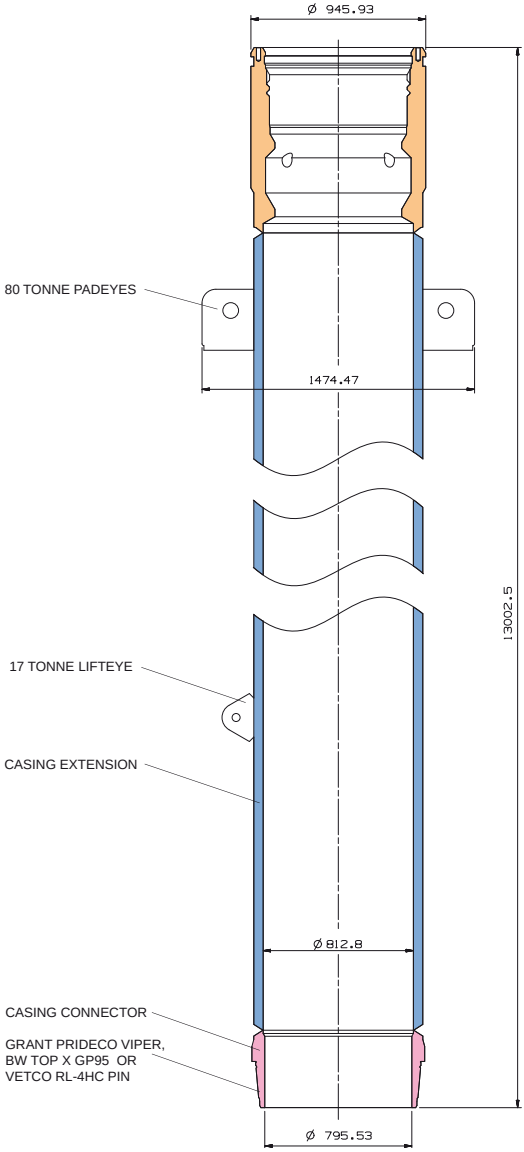

36” Conductor Housing

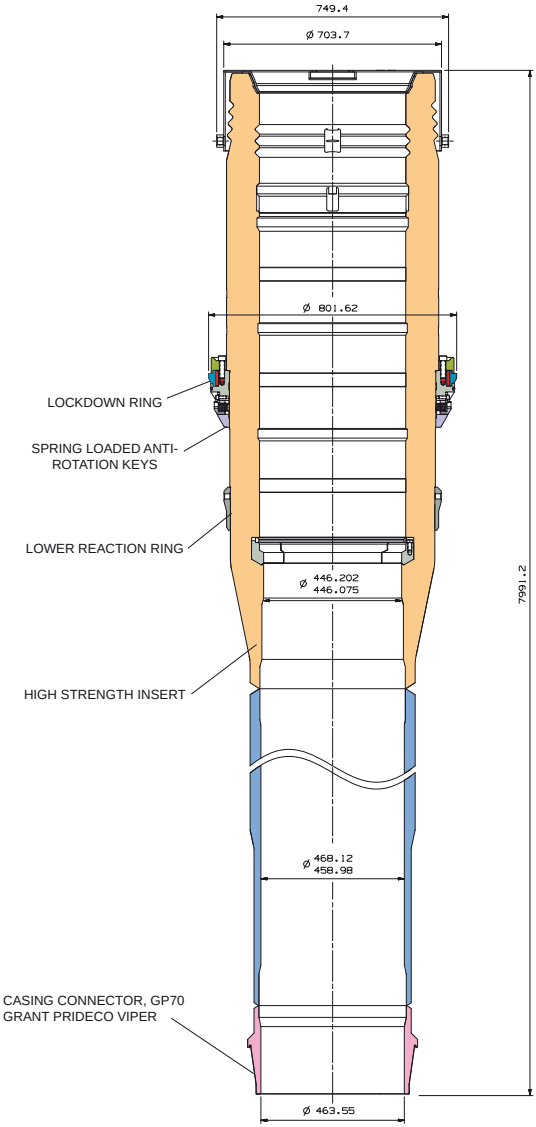

Wellhead Housing Heavy architecture

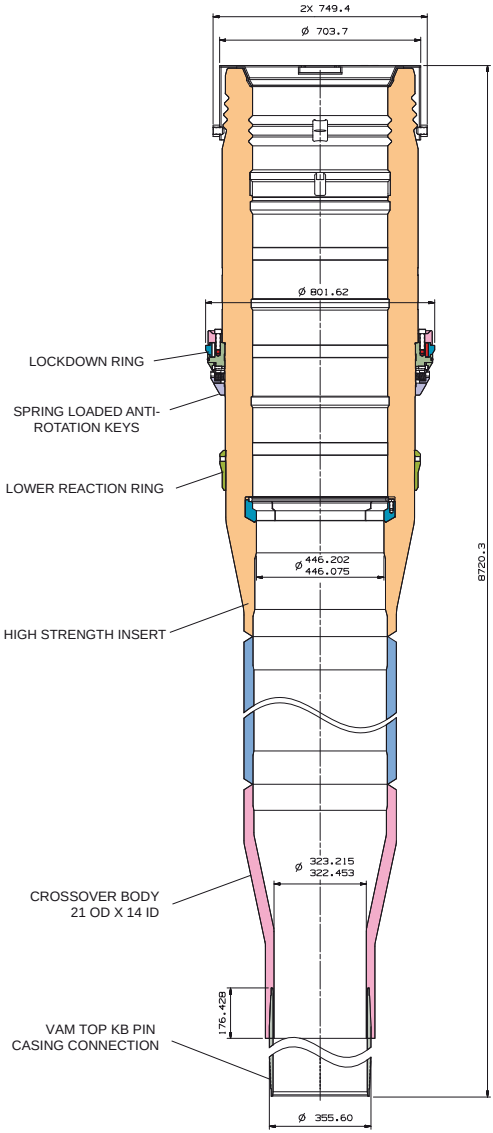

Wellhead Housing Light architecture

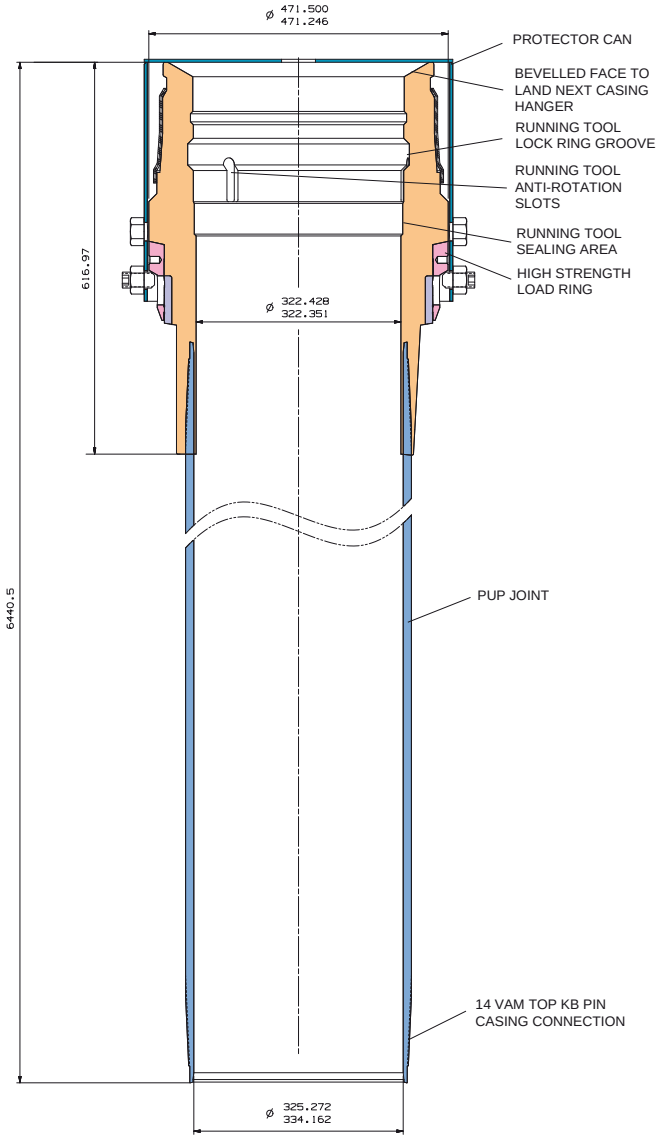

Casing Hanger 14”

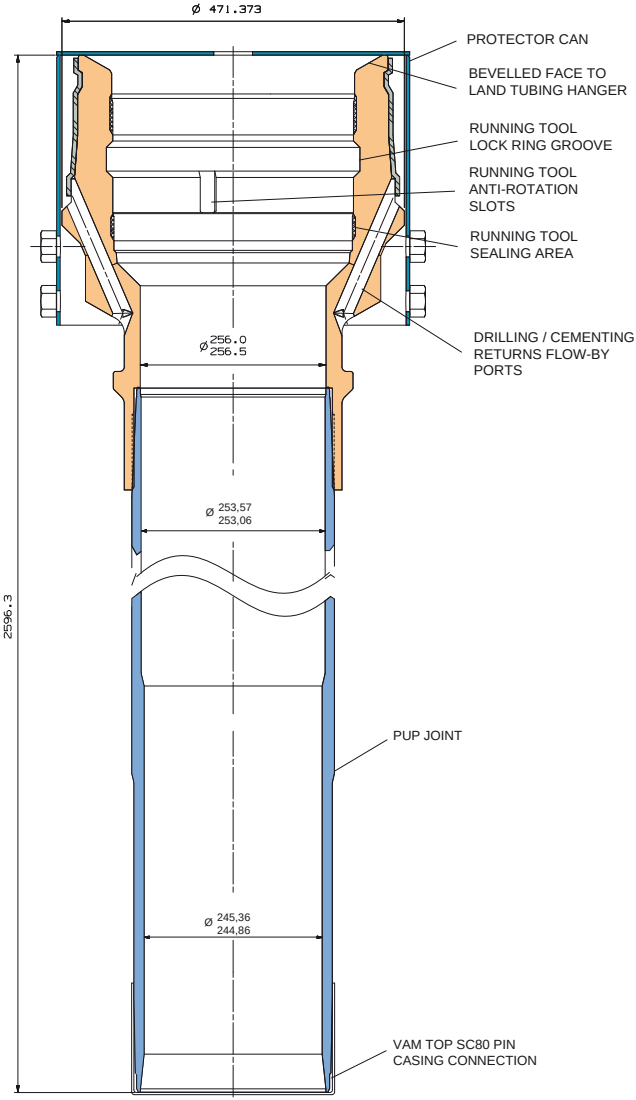

Casing Hanger 10 3/4”

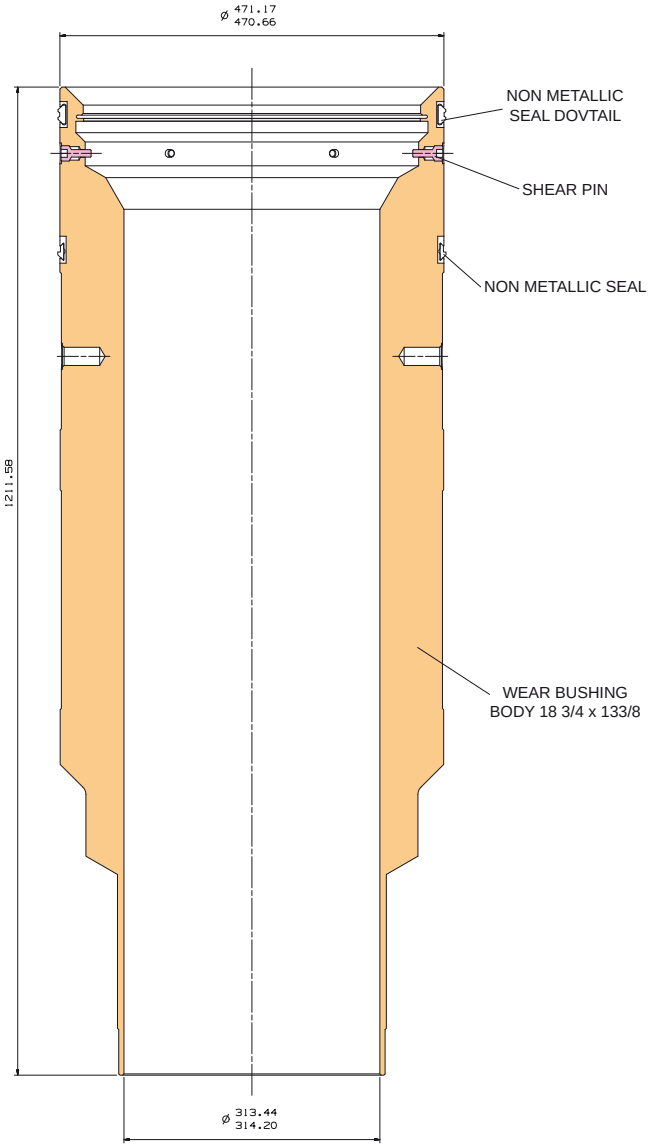

Wear Bushing

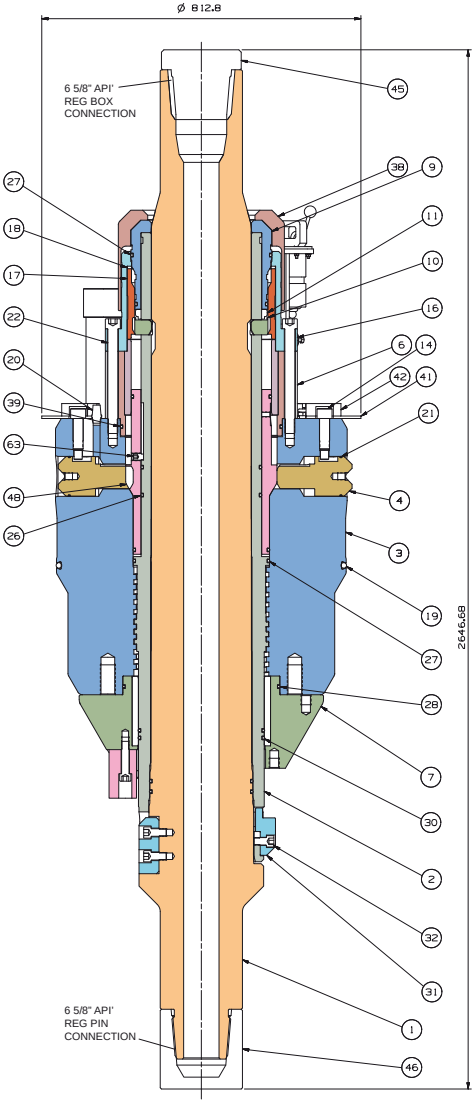

ITEM	DESCRIPTION
1	MANDREL
2	INNER SLEEVE
3	BODY
4	LOCKING DOG
6	UPPER CAP ASSEMBLY
7	LOWER CAP ASSEMBLY
9	INDICATOR CAP
10	LOCKING LUG
11	EXPANSION RING
14	RETAINER SCREW, 3/4-10UNC-2A X 2.95 LG
16	UPPER CAP RETAINER
17	ROTATING LOAD RING
18	BEARING RING
19	O-RING .562 CS X 27.750 1D
20	FILTER, 1/2"LP
21	O-RING
22	CAP SCREW, SOCKET HEAD
26	O-RING .275 CS X 10.975 1D
27	O-RING .275 CS X 12.475 1D
28	O-RING .275 CS X 14.975 1D
30	O-RING .275 X 11.475 1D
31	TORQUE
32	CAP SCREW, SOCKET HEAD .750-10UNC-2A X 3.25 LG
38	PROTECTION CAP
39	O-RING .275 CS X 14.475 1D
41	PROTECTION RING
42	HOLD DOWN RING
45	THREAD PROTECTOR
46	THREAD PROTECTOR
48	RELEASE SLEEVE
63	SHEAR PIN DOG POINT 0.750-10UNC-2A X 1.000 LG

Drill Ahead Tool

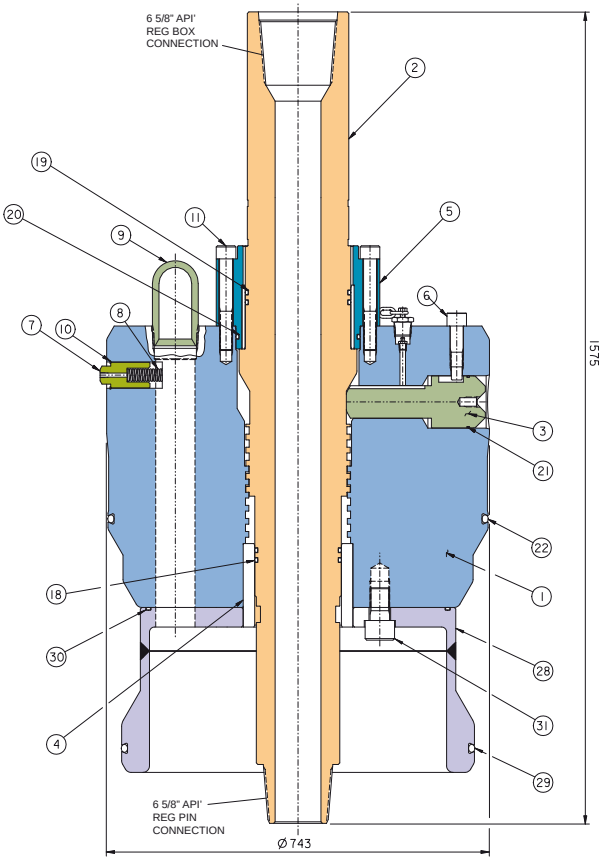

ITEM	DESCRIPTION
1	BODY
2	MANDREL
3	LOCKING DOG
4	EXTENDED LOWER BUSHING
5	INDICATOR CAP
6	RETAINER SCREW
7	ANTI-ROTATION PIN
8	COIL SPRING
9	BULL PLUG
10	RETAINING RING
11	CAP SCREW
12	GREASE FITTING
13	PLUG PIPE
14	CAP SCREW
15	MALE ELBOW

ITEM	DESCRIPTION
16	CHECK VALVE
17	CHAIN
18	O-RING
19	O-RING
20	O-RING
21	O-RING
22	O-RING
23	MALE ELBOW
24	CHECK VALVE
25	FILTER
26	THREAD PROTECTOR
27	THREAD PROTECTOR
28	SEAL RING
29	O-RING
30	O-RING
31	CAP SCREW

Conductor Housing RT

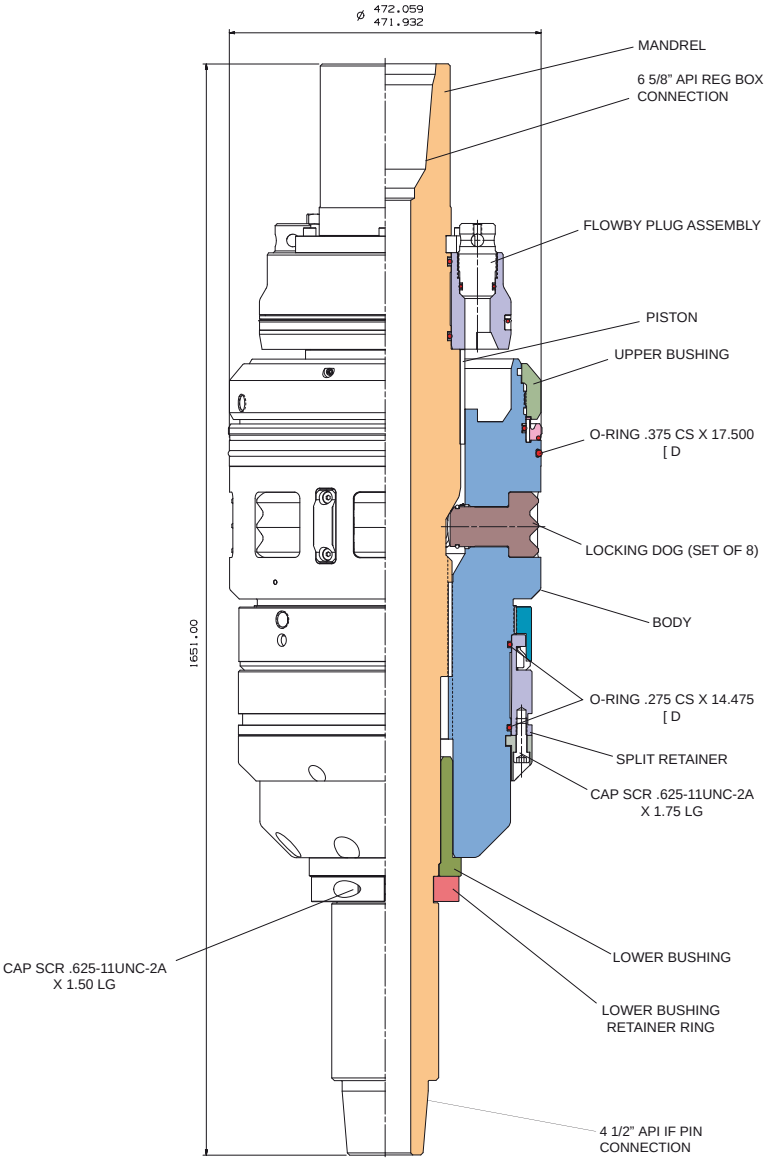

Wellhead Running Tool

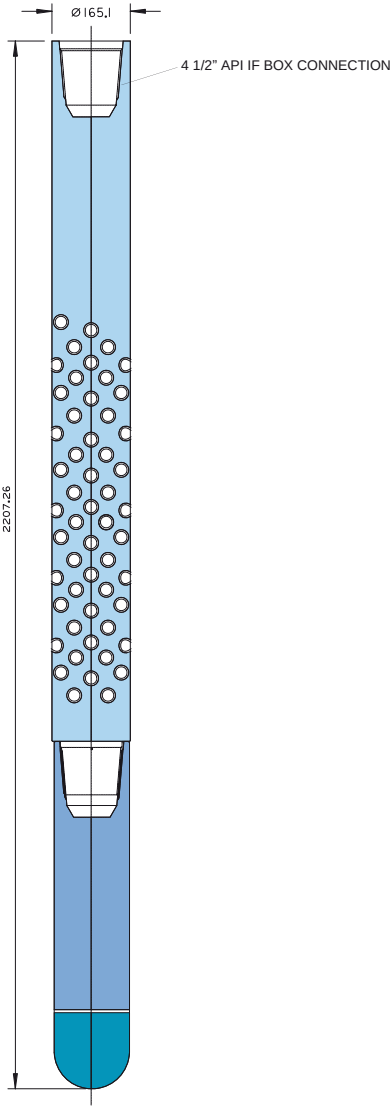

Wash Out Tool

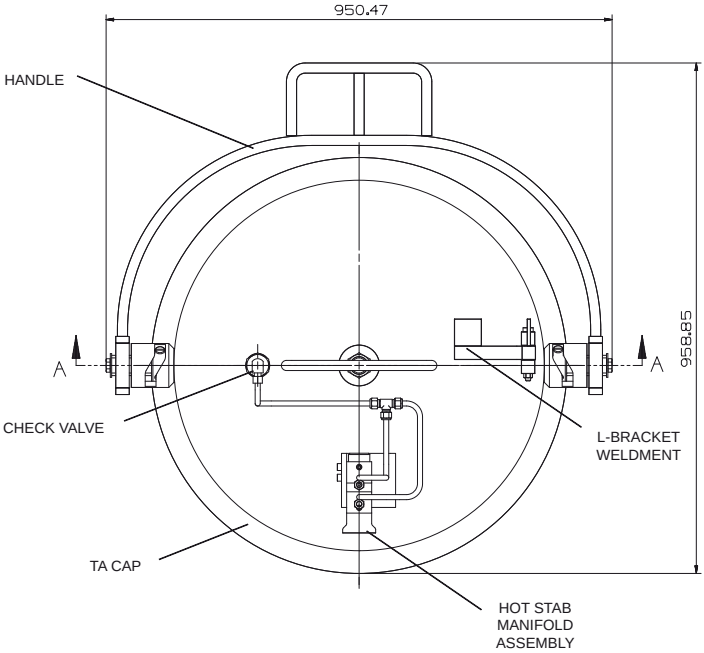
950.47
HANDLE
958.85
A
A
CHECK VALVE
L-BRACKET
WELDMENT
TA CAP
HOT STAB
MANIFOLD
ASSEMBLY

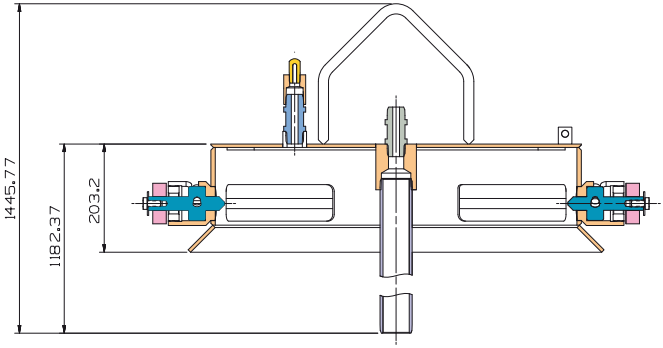
1445.77
1182.37
203.2

TA Cap

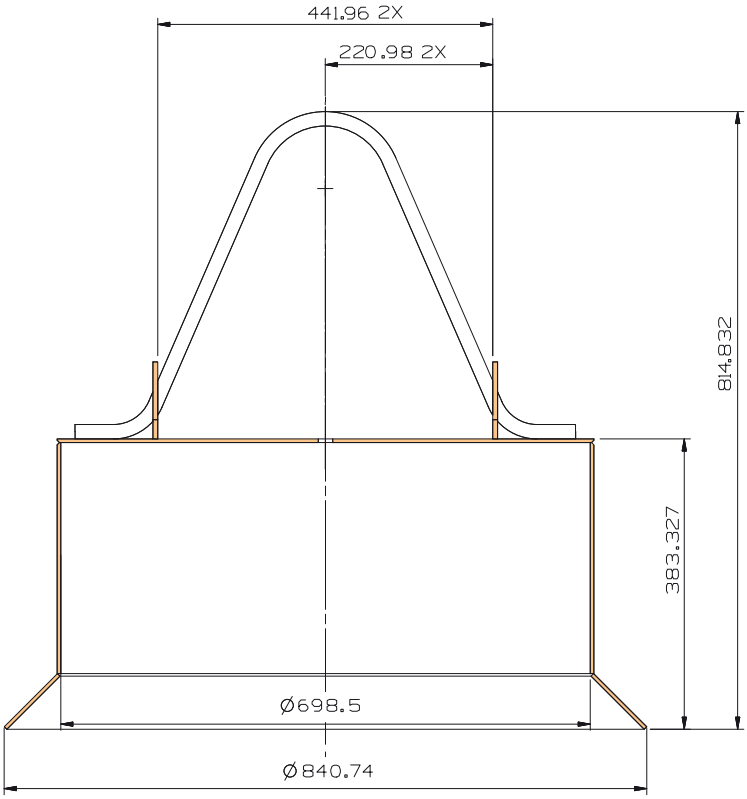

Trash Cap

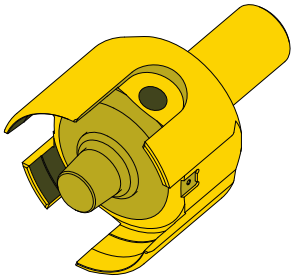

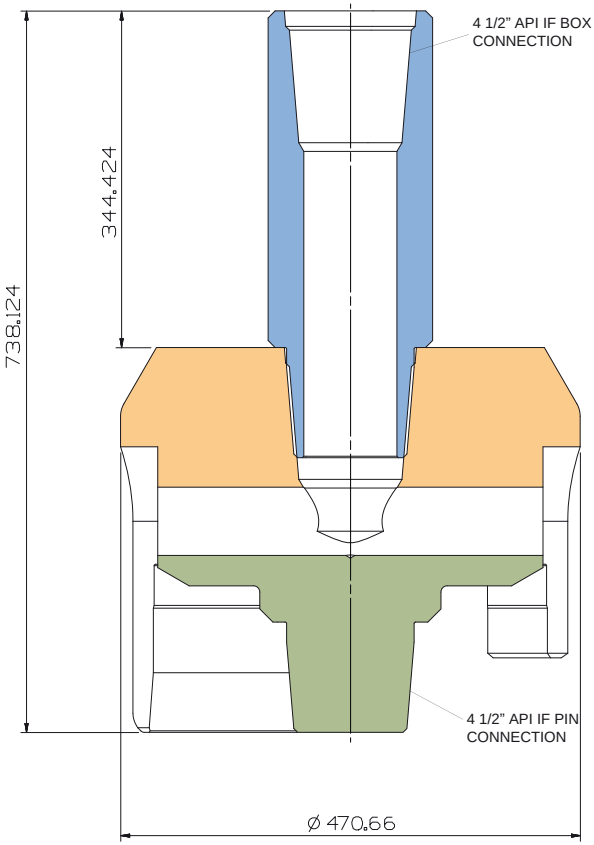

Cement Cleanout Tool

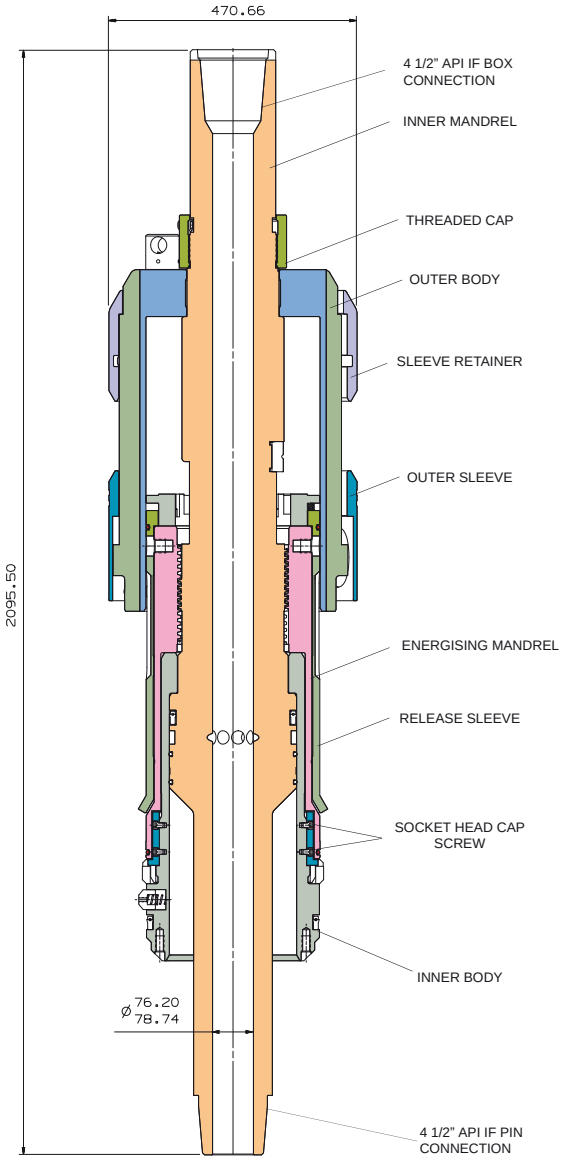

Single Trip Tool w/ Washout Facility

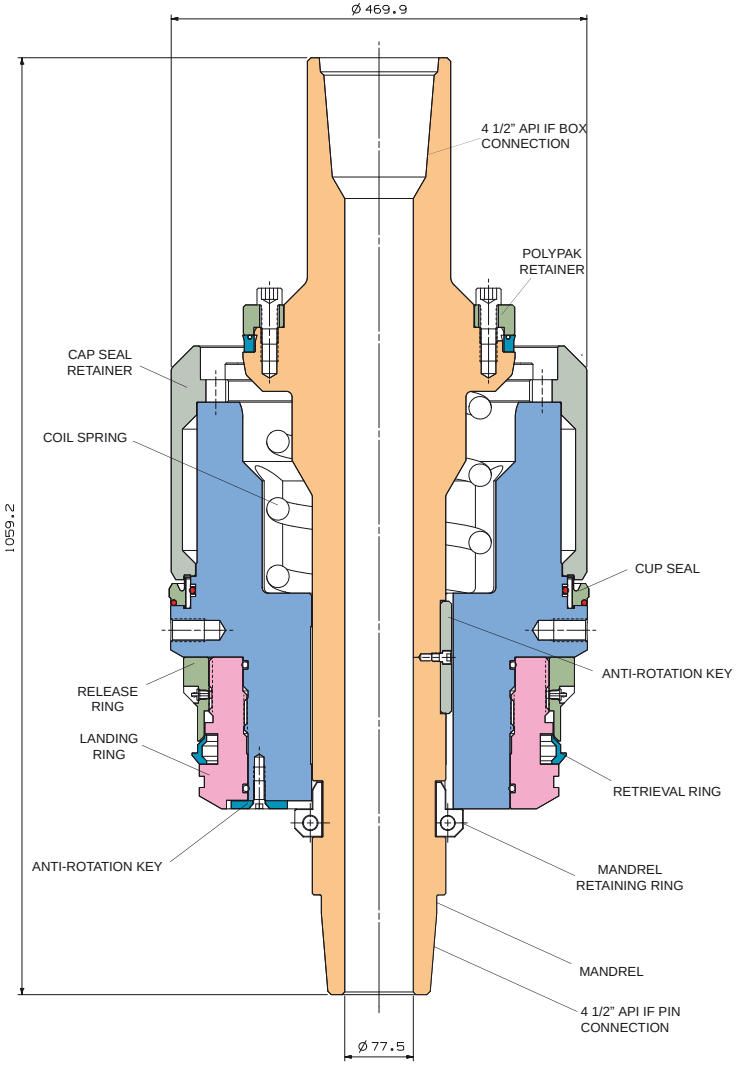

Spring Loaded Tool

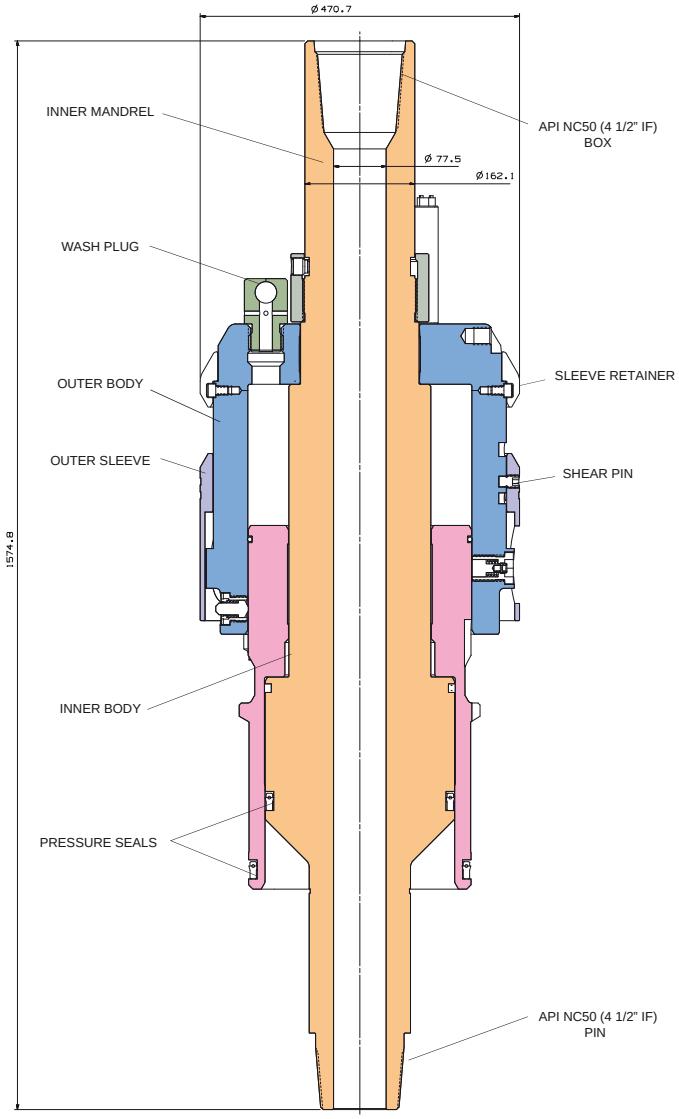

Annulus Seal Assembly Running Tool

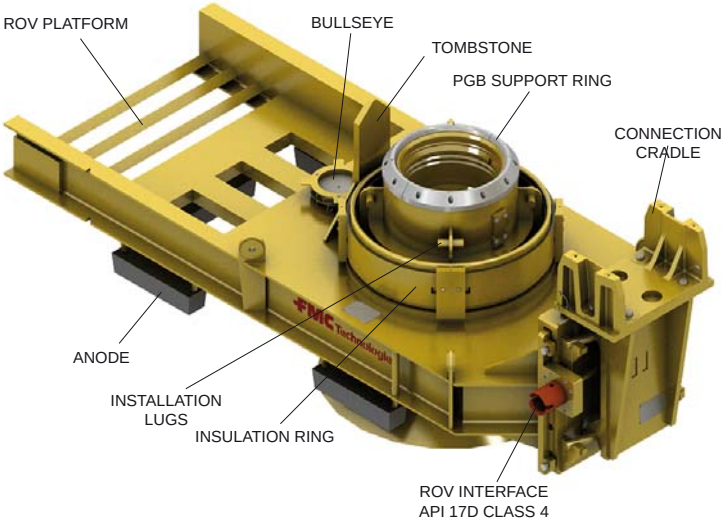

Permanent Guide Base, Production

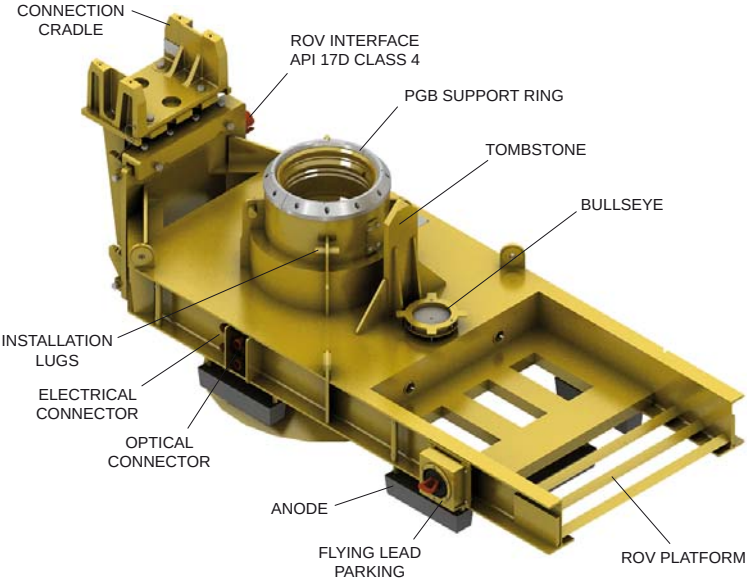

Permanent Guide Base, Injection

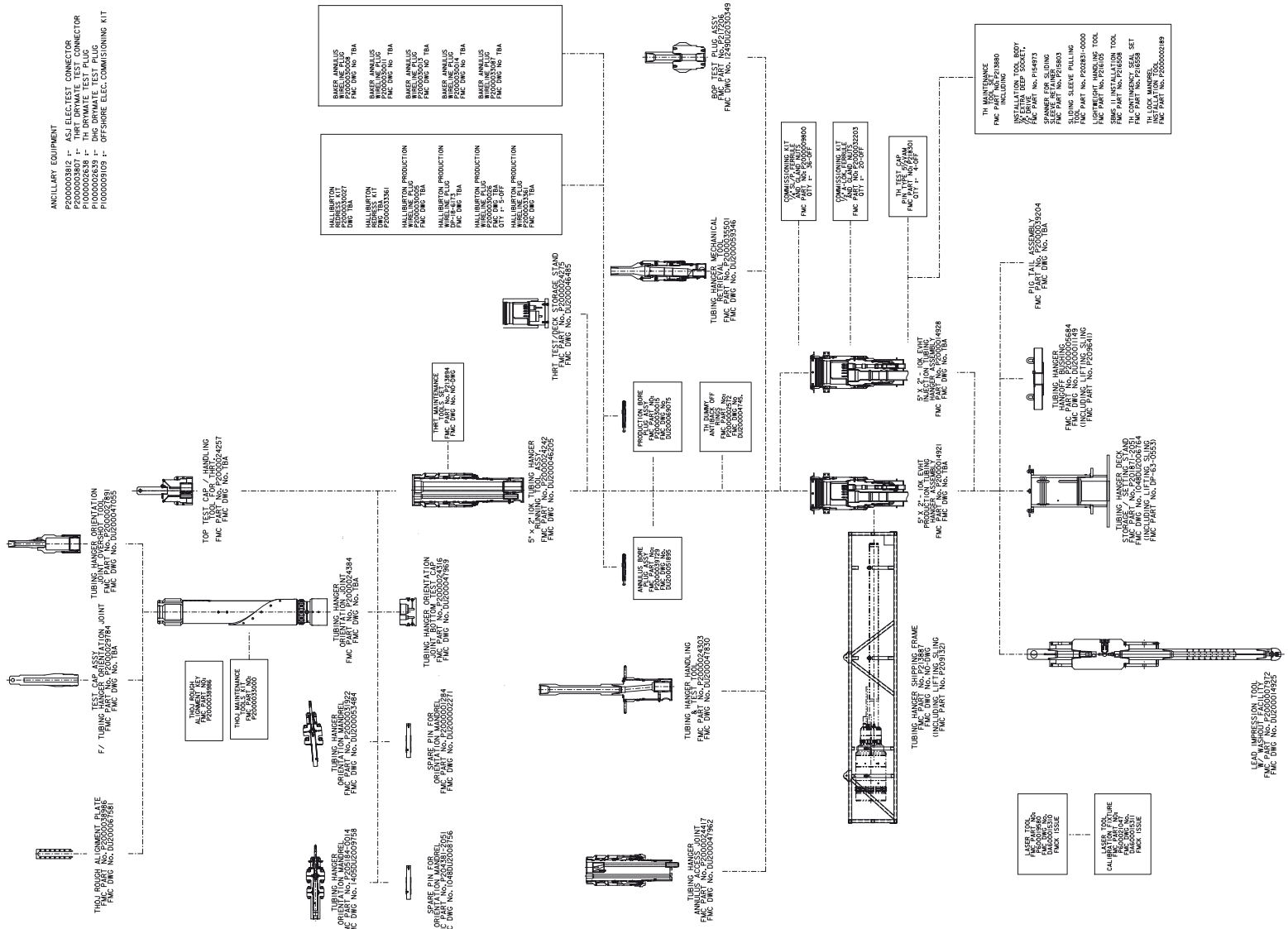

Tubing Hanger Scope of Supply

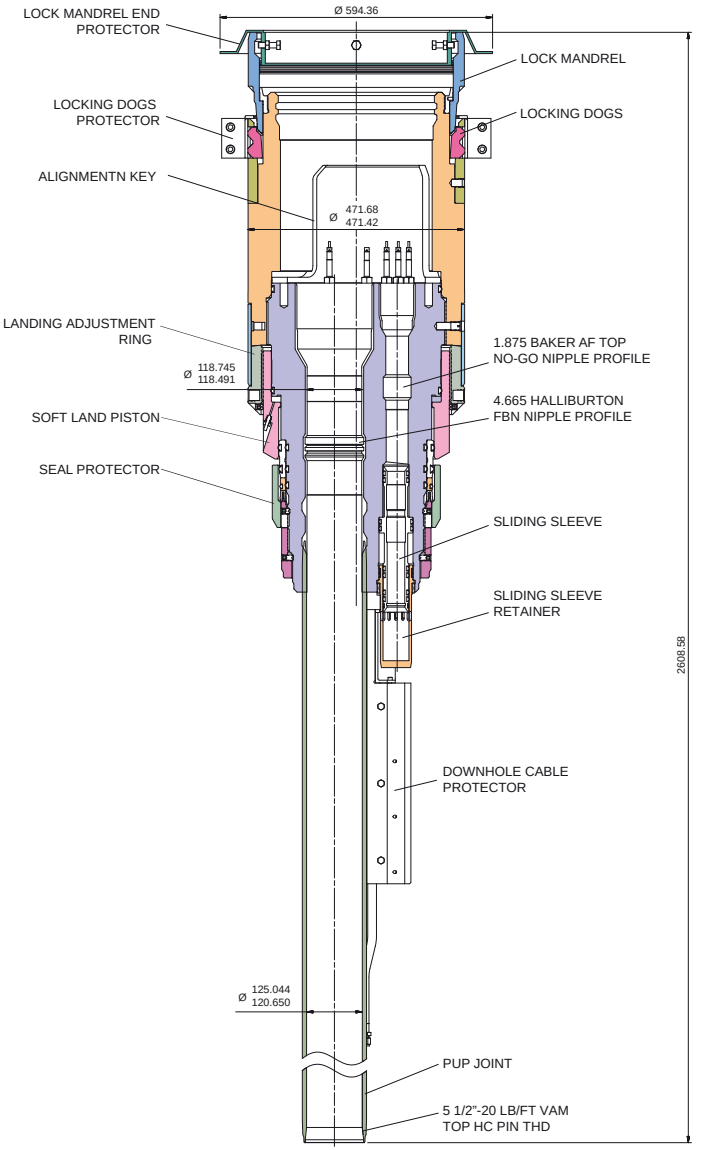

Tubing Hanger Production

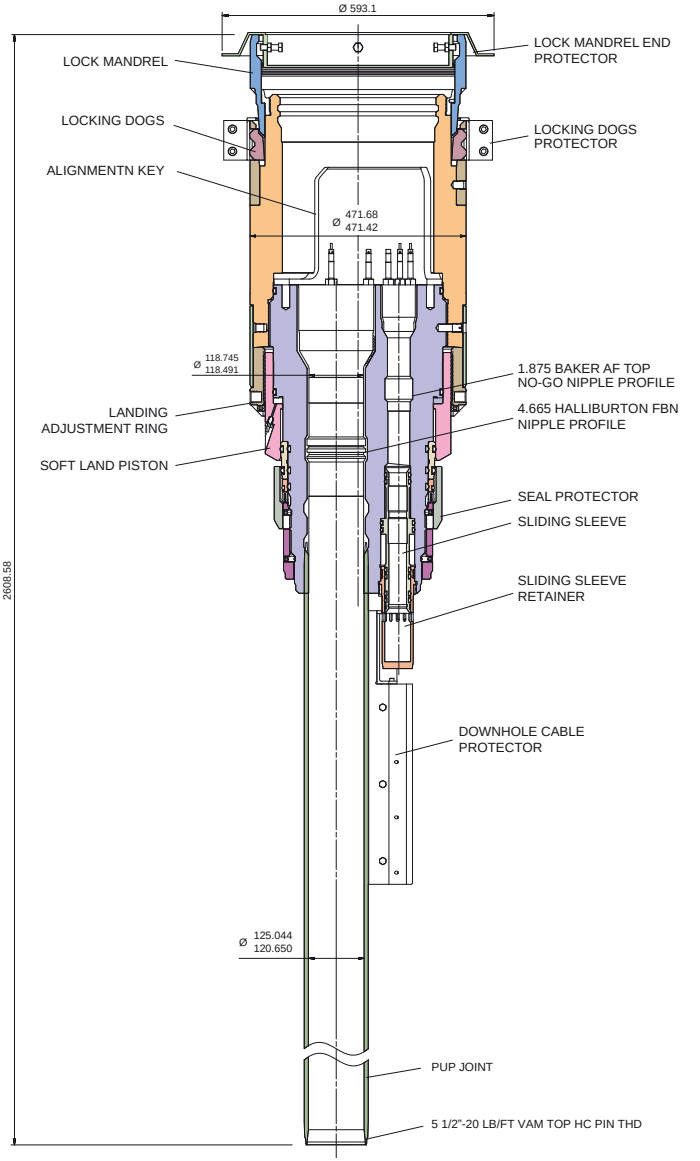

Tubing Hanger Injection

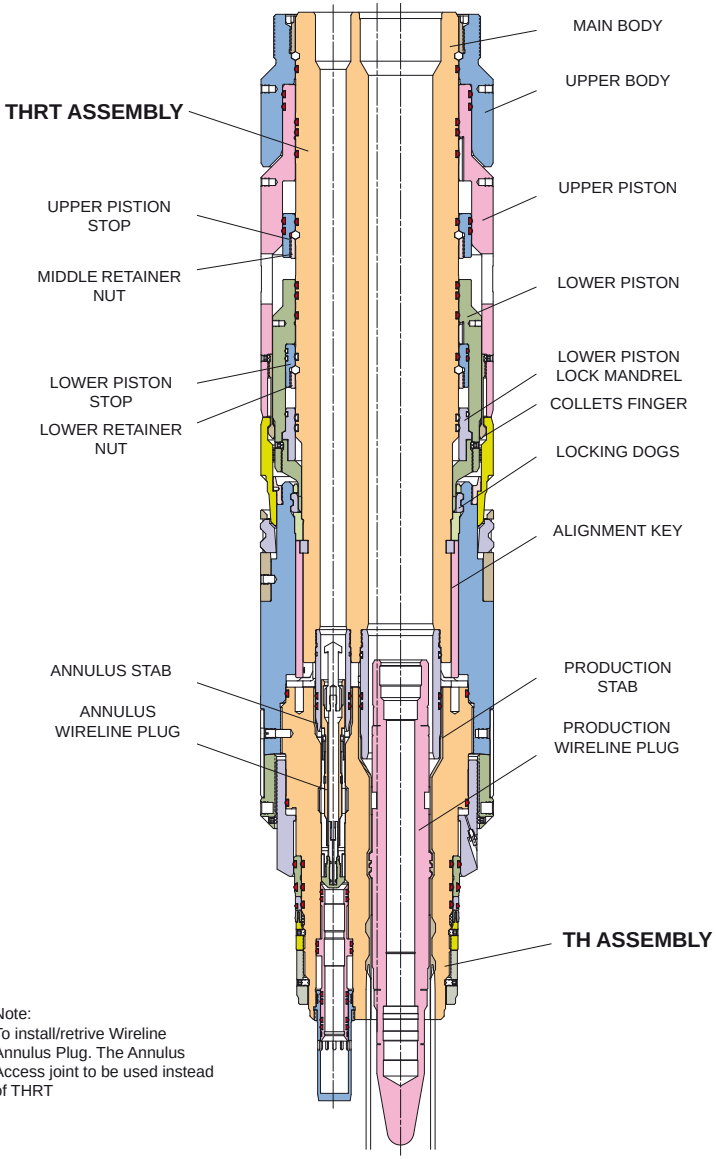

Note:
To install/retrive Wireline Annulus Plug. The Annulus Access joint to be used instead of THRT

TH and THRT

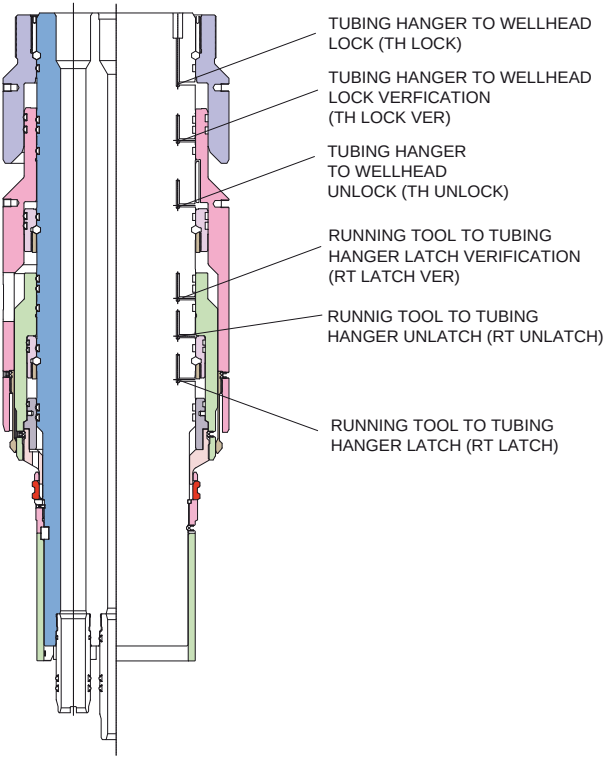

Function	Theoretical piston volume [liter] (Swept volume)	Max WP [bar]
THRT Unlatch	0,91	207
THRT Latch	0,91	207
THRT Latch Verification	N/A	207
TH Unlock	1,98 in air 1,6 in wellhead	276
TH Lock	1,98 in air 1,6 in wellhead	276
TH Lock Verification	N/A	276
TH Soft Land	1,29	207

THRT Hydraulic Functions and Volumes

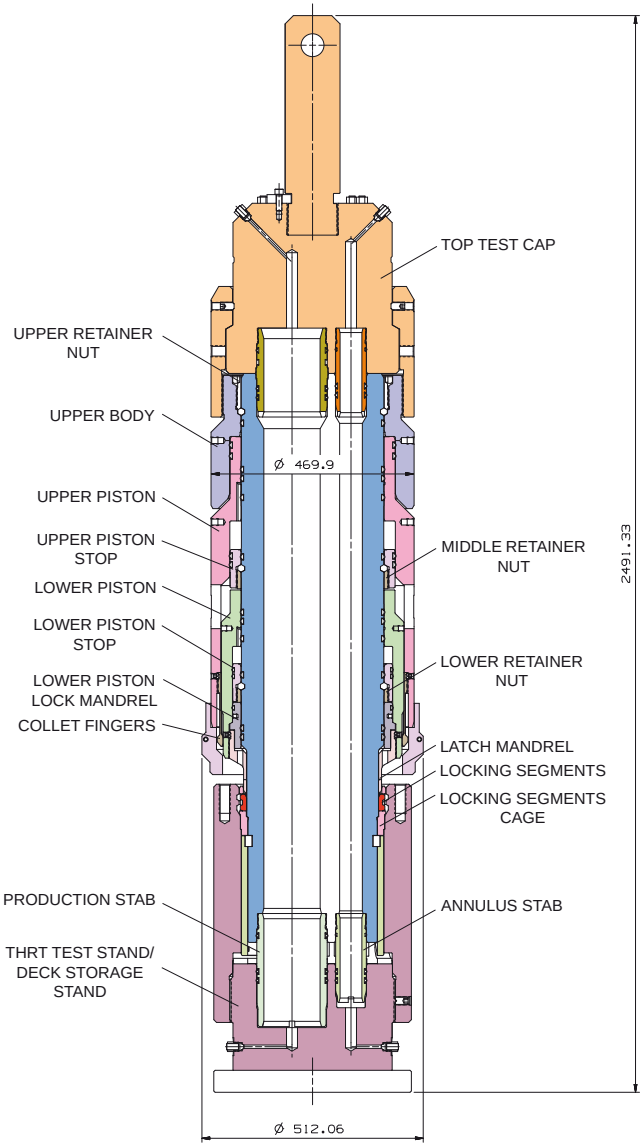

Tubing Hanger Running Tool

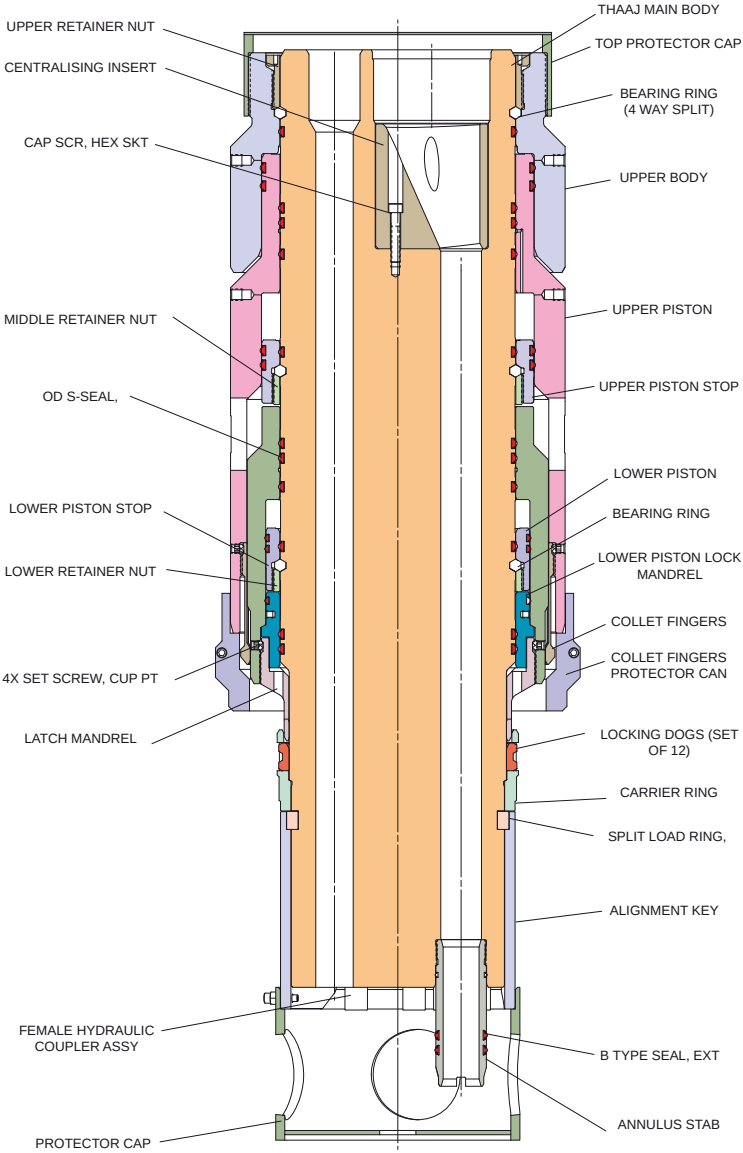

Tubing Hanger Annulus Access Joint

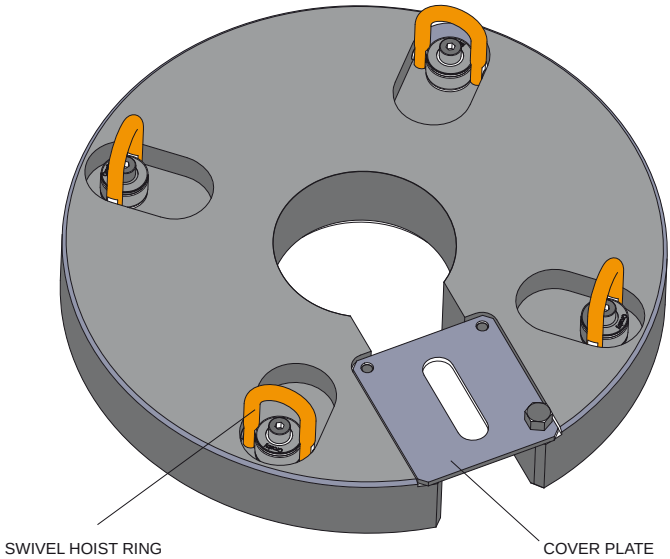

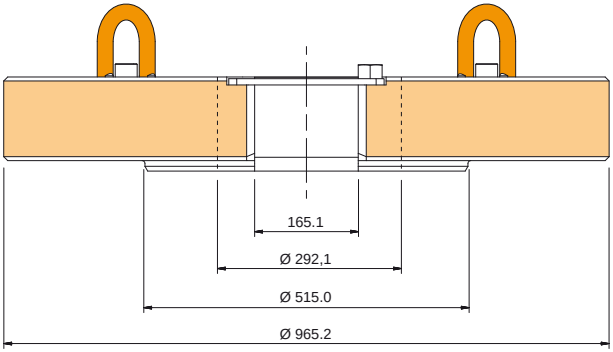

TH Hang-off bushing

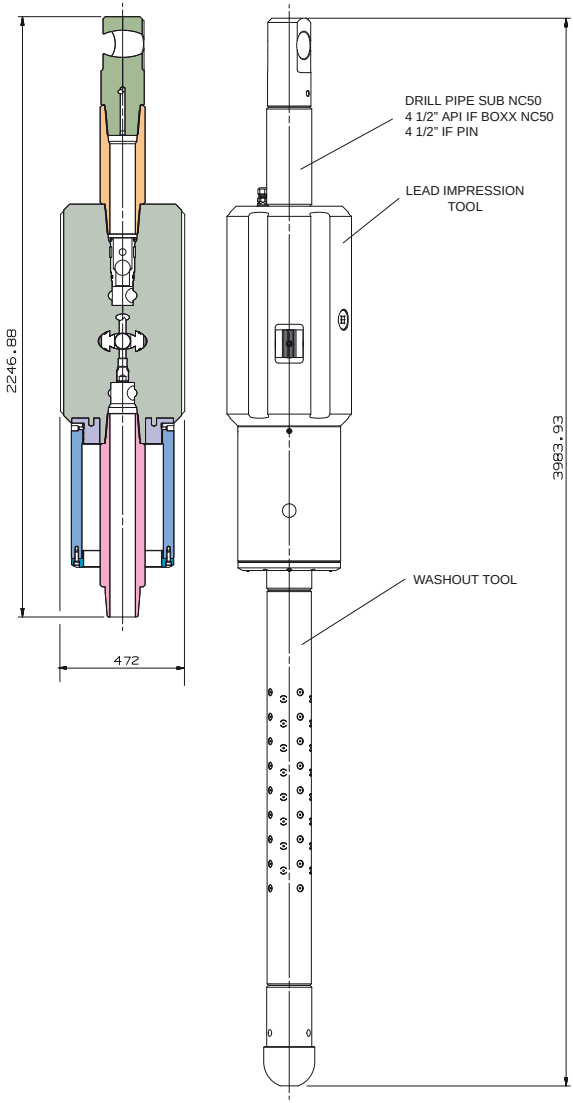

TH Lead Impression Tool

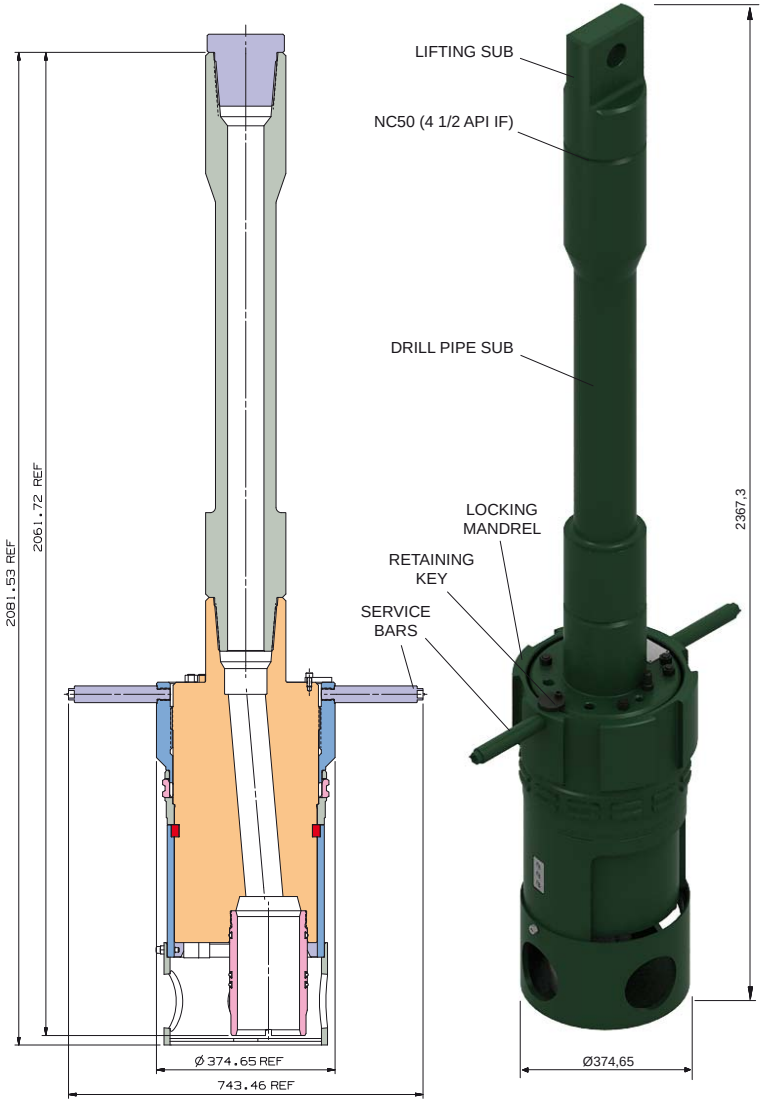

TH Test & Handling Tool

TH Deck Storage / Setting Stand

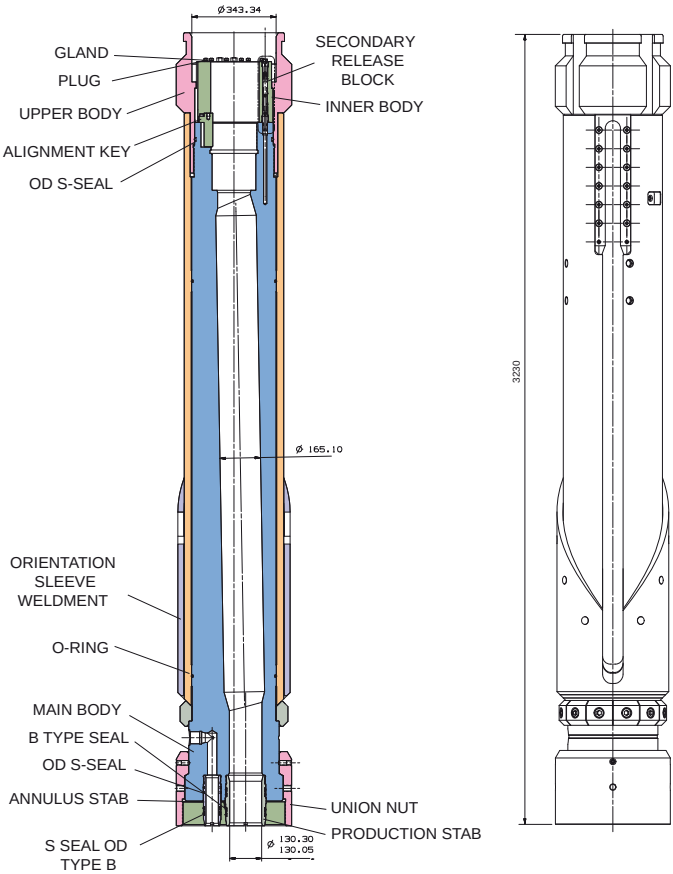

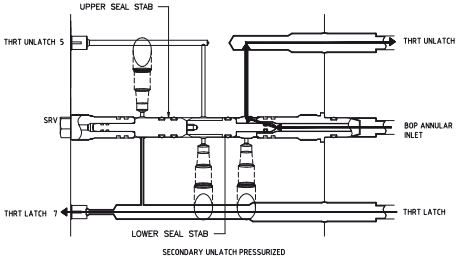

TH Orientation Joint

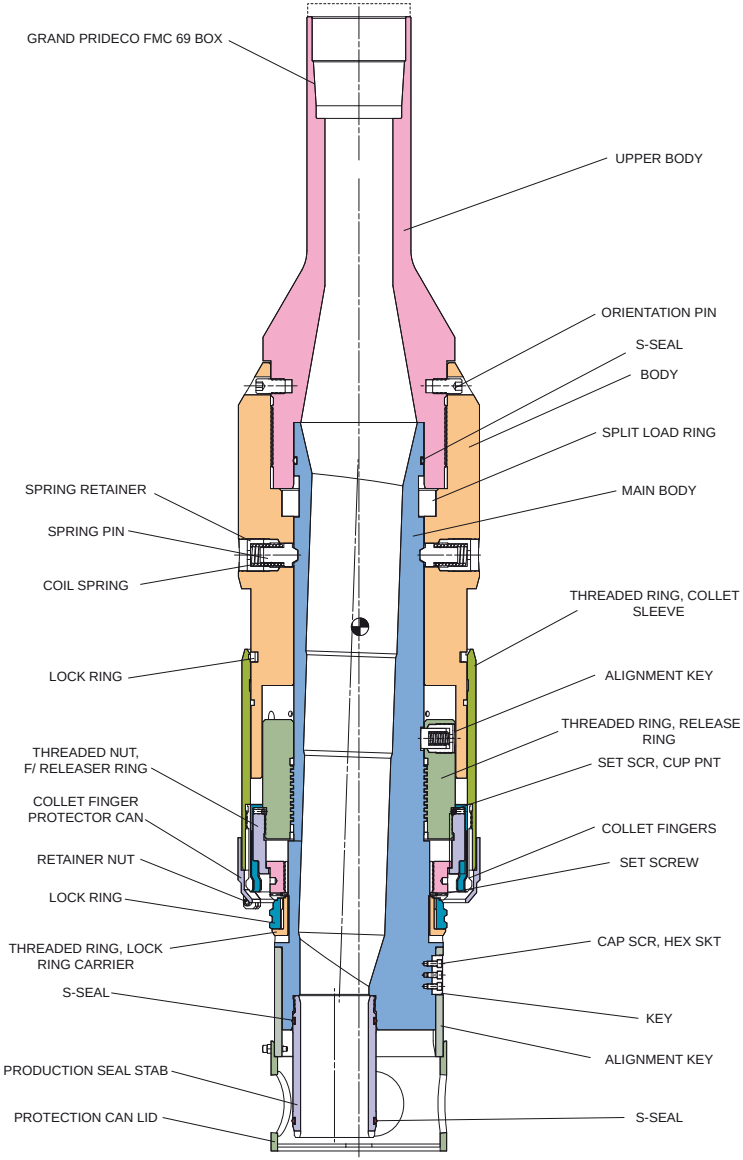

TH Mechanical Retrieval Tool

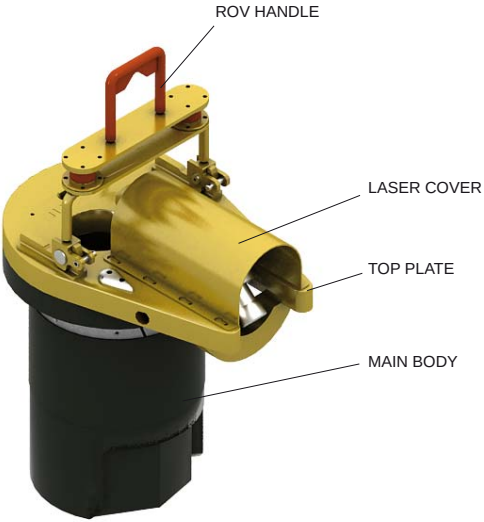

TH ORIENTATION CHECK TOOL

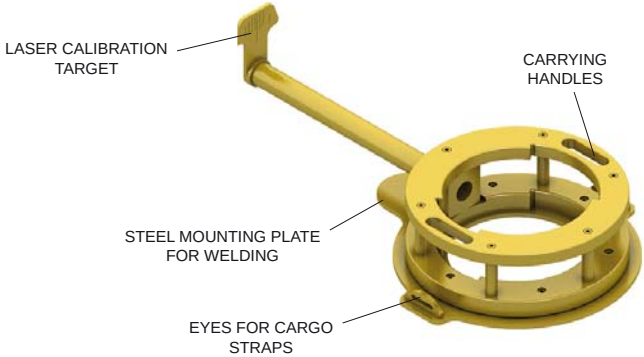

CALIBRATION TOOL

TH Orientation Check Tool – laser type with calibration tool

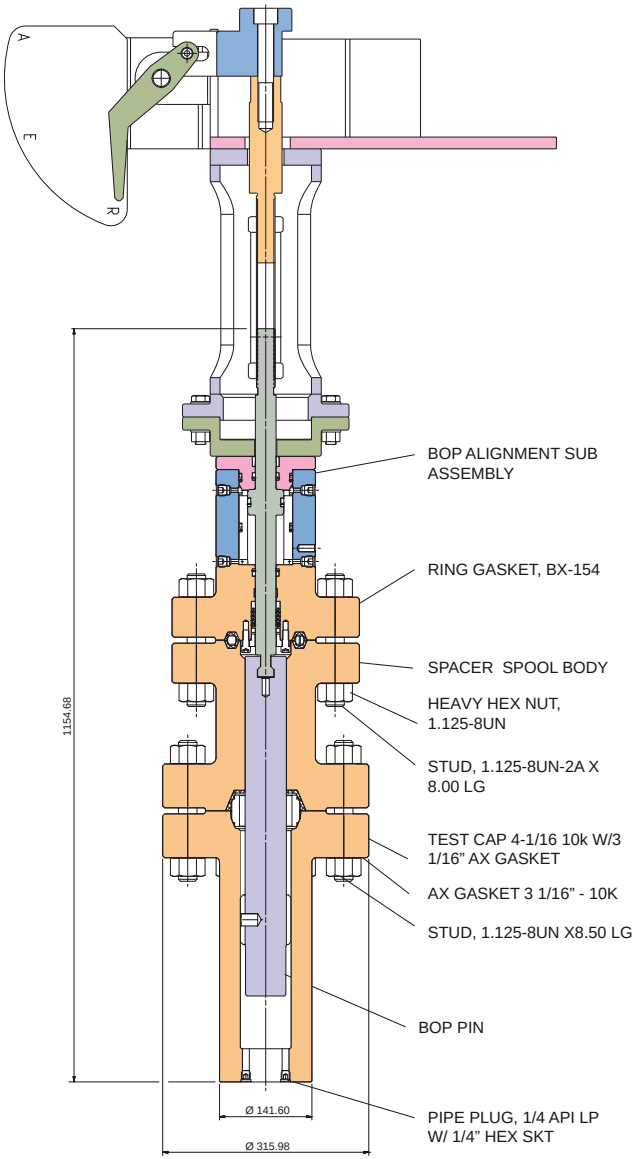
A
E
R
1154.68
BOP ALIGNMENT SUB ASSEMBLY
RING GASKET, BX-154
SPACER SPOOL BODY
HEAVY HEX NUT, 1.125-8UN
STUD, 1.125-8UN-2A X 8.00 LG
TEST CAP 4-1/16 10k W/3 1/16” AX GASKET
AX GASKET 3 1/16” - 10K
STUD, 1.125-8UN X8.50 LG
BOP PIN
PIPE PLUG, 1/4 API LP W/ 1/4” HEX SKT
Ø 141.60
Ø 315.98

BOP Pin DS-1

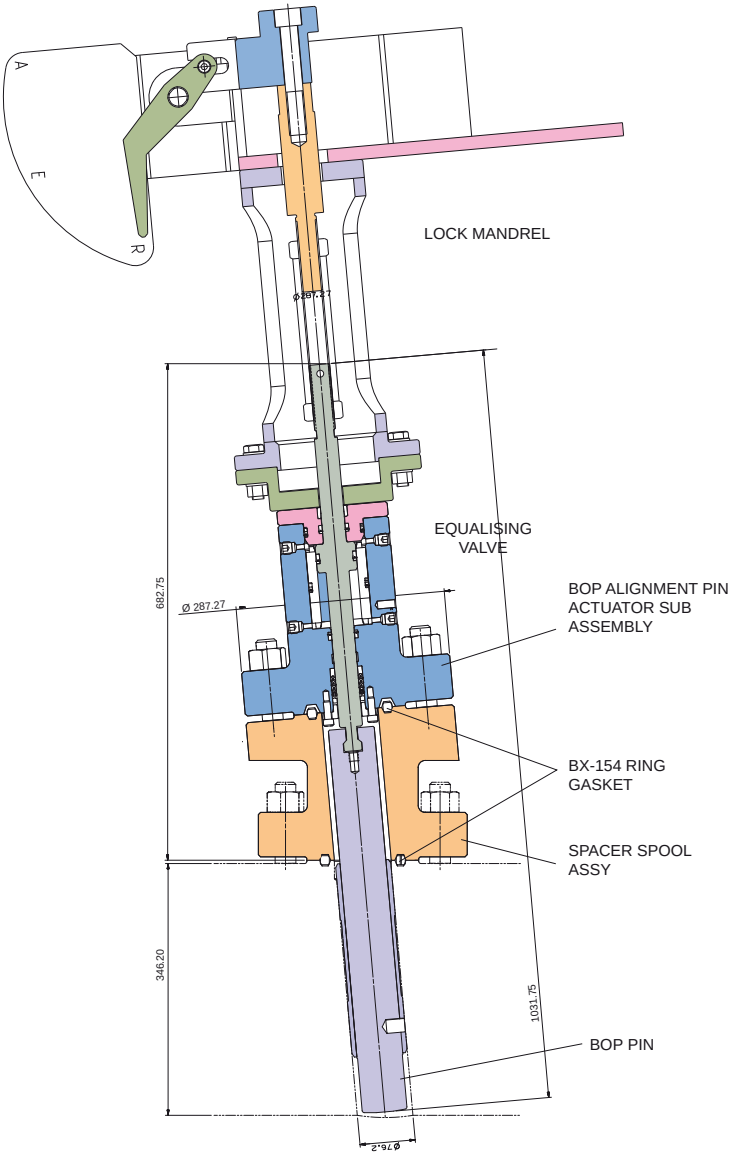

BOP Pin West Gemini

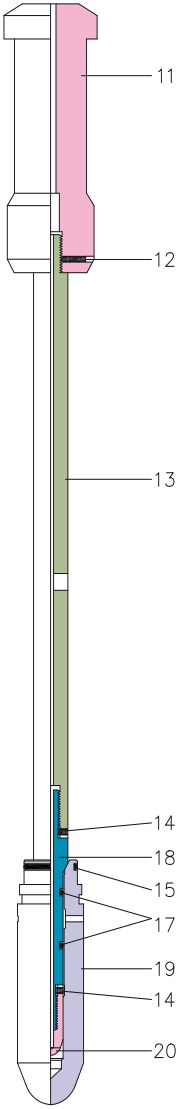

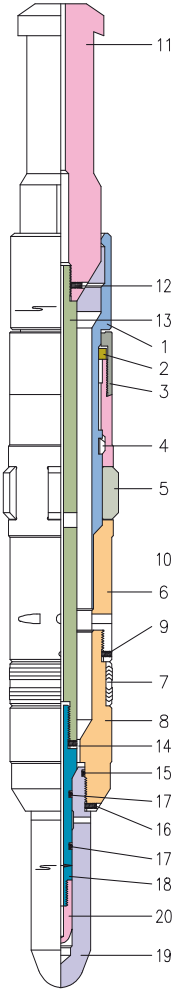

Item No.	Description
1	Fishing Neck
2	Split Ring Segments
3	Lock Ring
4	C-ring
5	Locking Dogs
6	Lock Mandrel
7	Packing Unit
8	Packing Sub
9	St. St'l. min Socket Hd Set Screw
10	St. St'l. min Socket Hd Set Screw
11	Fishing Neck
12	St. St'l. min Socket Hd Set Screw
13	Seal Mandrel Extension
14	St. St'l. min Socket Hd Set Screw
15	O-ring
16	St. St'l. min Socket Hd Set Screw
17	O-ring
18	Seal Mandrel
19	Bottom Sub
20	Nose Cap

Annulus Wireline Plug (Baker AF 1.875")

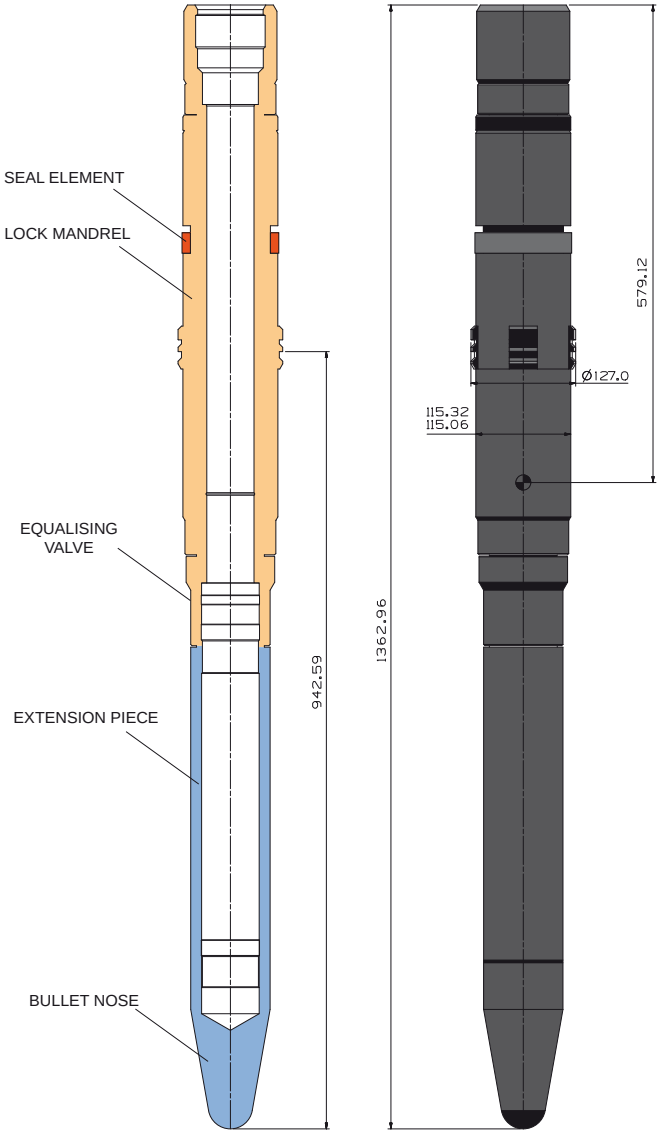

Production Wireline Plug (Halliburton 4.665 FBN Plug)

NOTES

05. Xmas Tree System

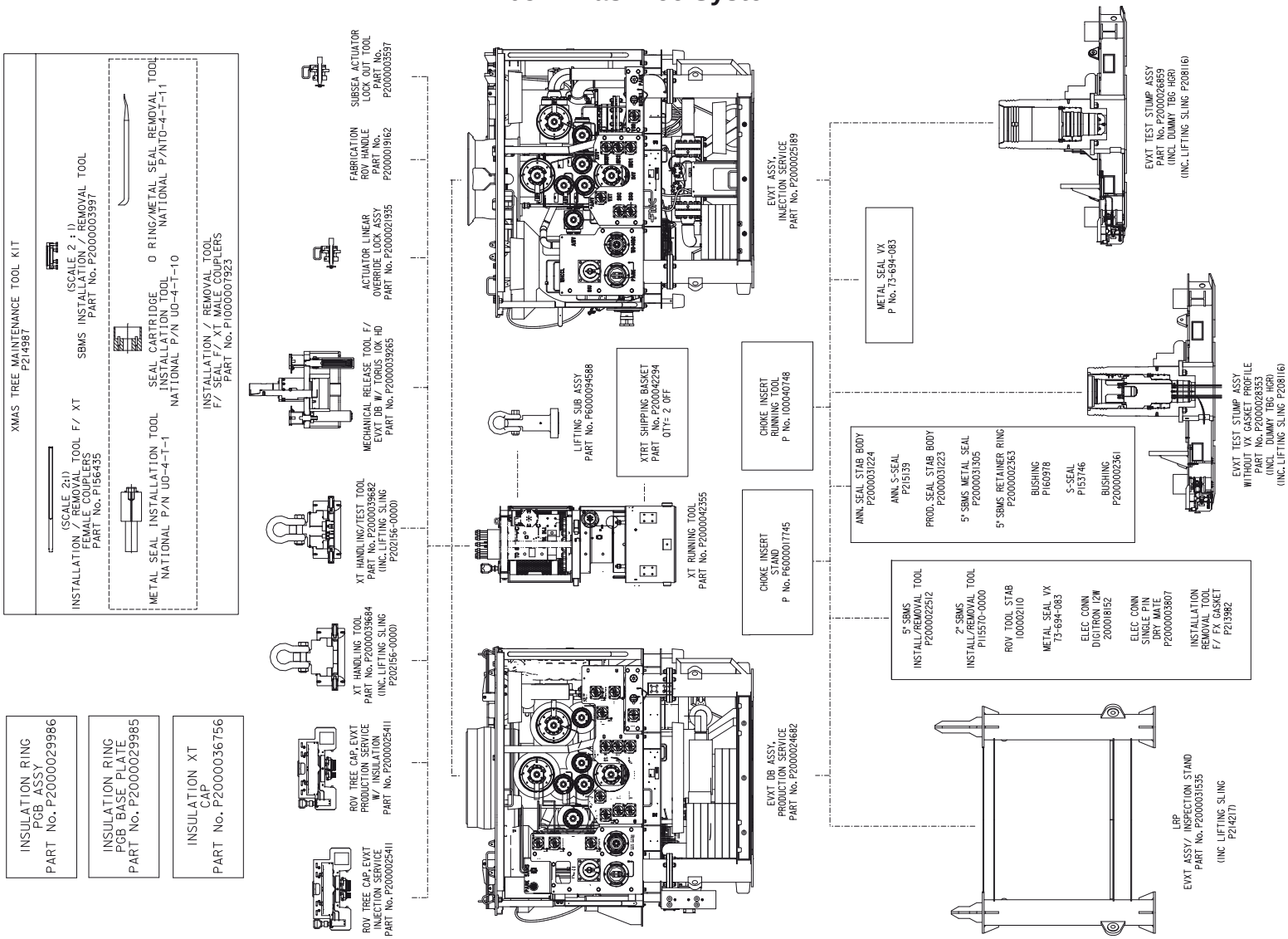

XT System Scope of Supply

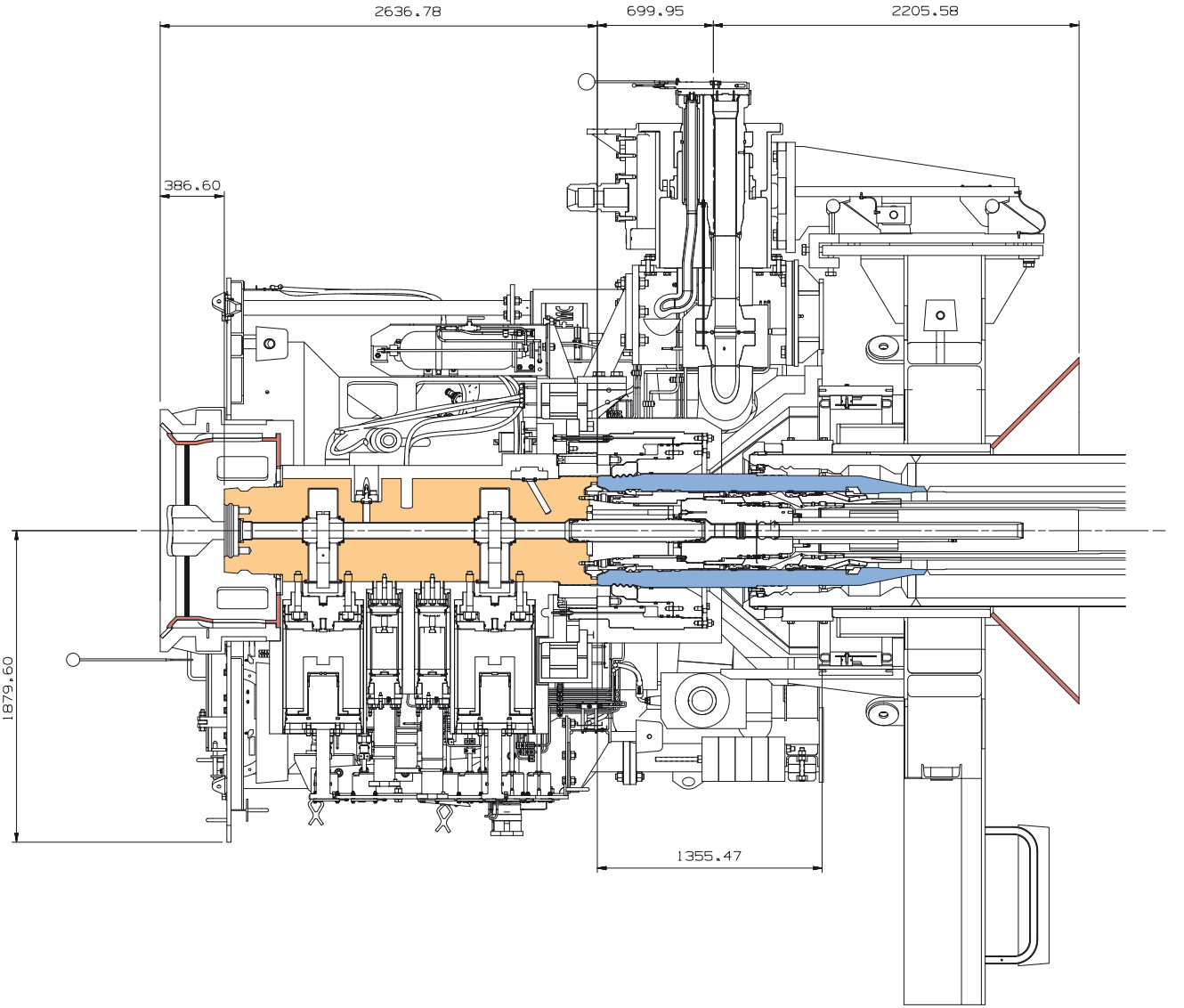

DU200062421

Wellhead Conductor, PGB, XT incl. stack-up heights

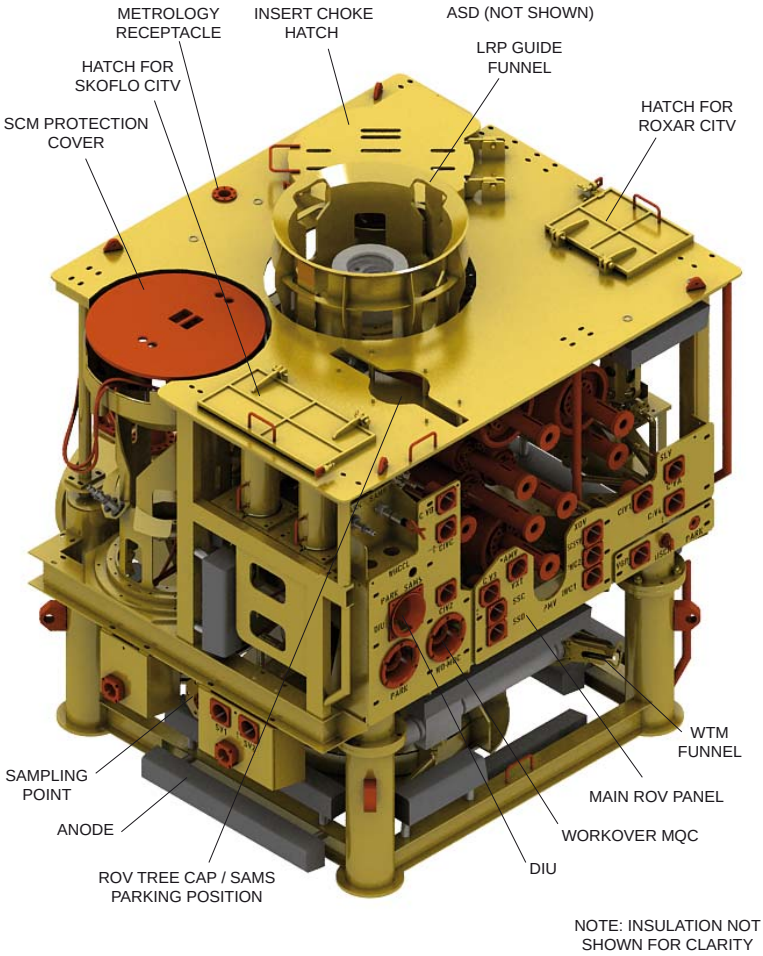
METROLOGY RECEPTACLE
INSERT CHOKE HATCH
ASD (NOT SHOWN)
LRP GUIDE FUNNEL
HATCH FOR SKOFLO CITV
SCM PROTECTION COVER
HATCH FOR ROXAR CITV
WTM FUNNEL
SAMPLING POINT
MAIN ROV PANEL
ANODE
WORKOVER MQC
DIU
ROV TREE CAP / SAMS PARKING POSITION
NOTE: INSULATION NOT SHOWN FOR CLARITY

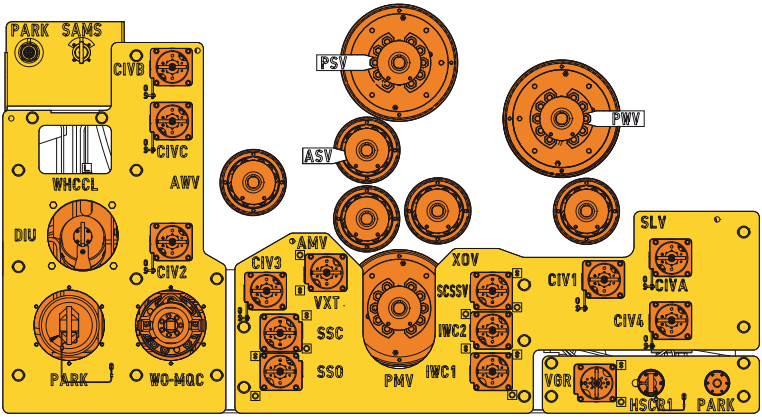

ROTARY OVERRIDE INTERFACES							
Label	Type	Description	ROV Interface	No. of Turns	Direction to Close/ Engage	Torque	
						Nominal	Max. Op.
VXT	Needle Valve	½" – 10K, Block Mounted, Oliver Needle Valve	ISO 13628-8 Type B (operate with FMC special tool)	3/4±15°	CW	90 lbf-ft (122 Nm)	200 lbf-ft (271 Nm)
SSC SSO SCSSV IWC1 IWC2 VGR	Needle Valve	½" – 10K, Block Mounted, Oliver Needle Valve	ISO 13628-8 Type B (operate with FMC special tool)	3/4±15°	CW	90 lbf-ft (122 Nm)	200 lbf-ft (271 Nm)
CIVA CIVB CIVC	Gate Valve	1 -10K, W/ Actuator, FF, P-U Multi-lip Stack Stem Seal, W/ 1" Check Valve	ISO 13628-8 Type B (operate with FMC special tool)	12	CW	70-90 lbf-ft (95-122 Nm)	250 lbf-ft (339 Nm)
CIV1 CIV2 CIV3 CIV4 SV1 SV2	Gate Valve	1 -10K, W/ Manual, FF, P-U Multi-lip Stack Stem Seal, High Torque	ISO 13628-8 Type B (operate with FMC special tool)	12	CW	70-90 lbf-ft (95-122 Nm)	250 lbf-ft (339 Nm)
CITV 3 ROXAR	Rotary Pen-etrator	Vertical Docking	J-Slot with locking handle				
CITV1 & 2 SKOFLO	Rotary Pen-etrator	Vertical Docking	ISO 13628-8 Class 4	9±0.25	CW to Lock	450 ft-lbf (610 Nm)	460 ft-lbf (624 Nm)
					CCW to Unlock	500 ft-lbf (678 Nm)	510 ft-lbf (692 Nm)
CV	Choke	Master Flo, P4 - 10K	ISO13628-8 Class 4	20	CW	50 lbf-ft (68 Nm)	275 lbf-ft (373 Nm)

ROV Panel - XT Production

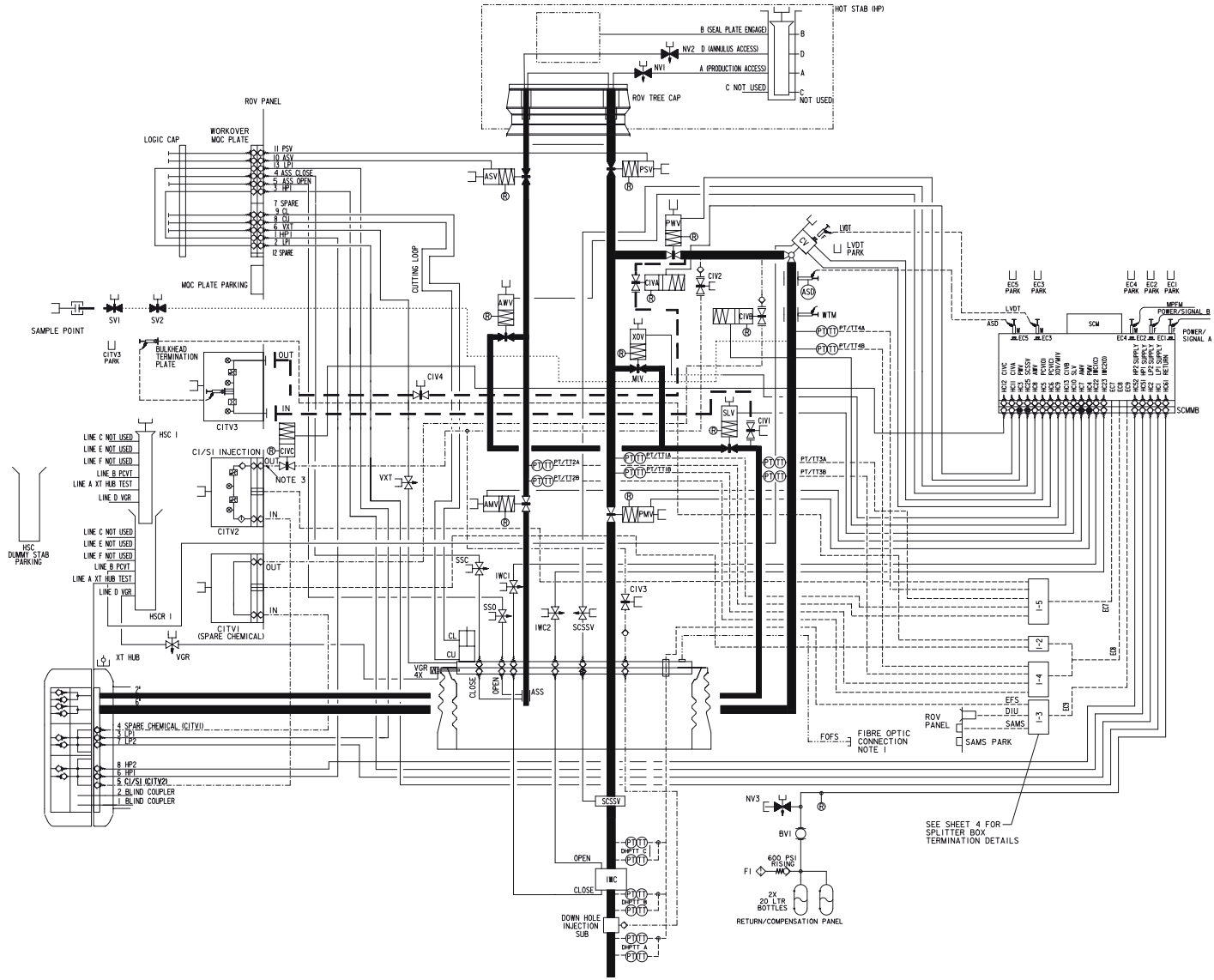

DM200025806 / AO-045-SX-2000-120153

Schematic - XT Production

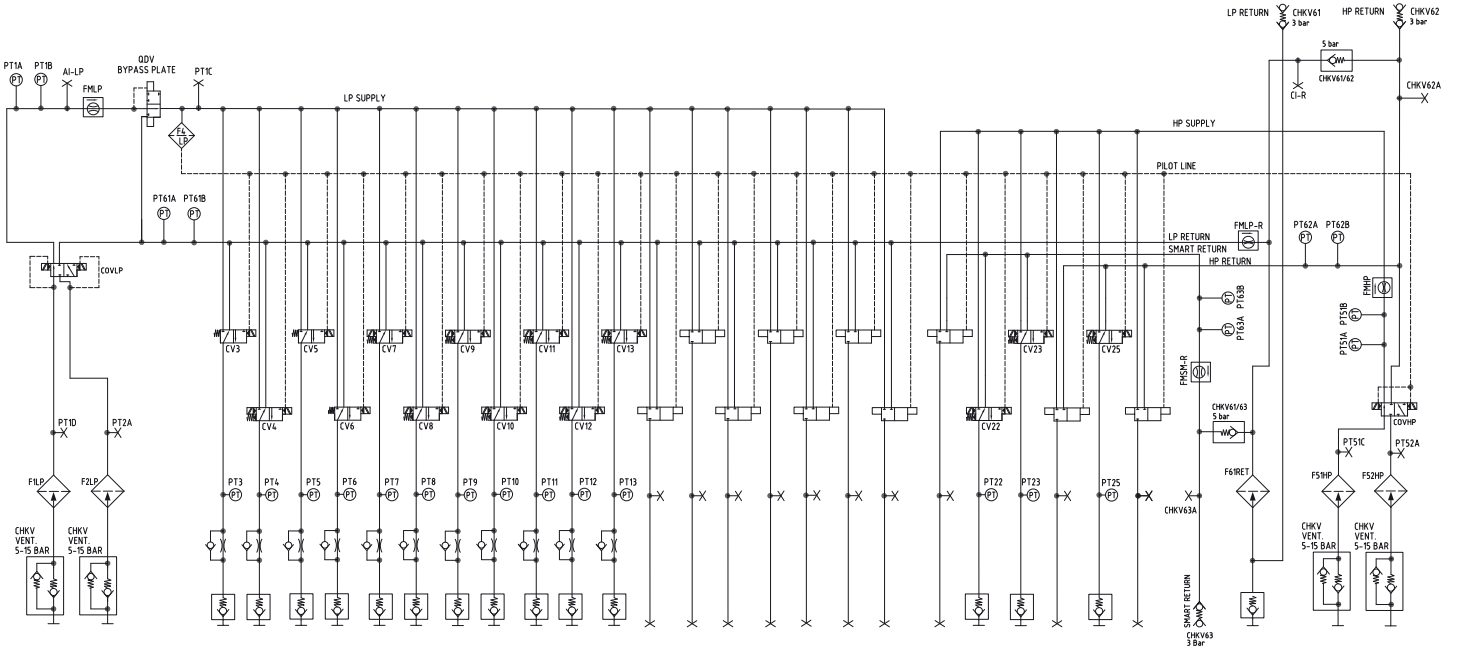

HYDR. LINES:	HC1	HC2	HC3	HC4	HC5	HC6	HC7	HC8	HC9	HC10	HC11	HC12	HC13	HC14	HC15	HC16	HC17	HC18	HC19	HC20	HC21	HC22	HC23	HC24	HC25	HC26	NOTE 4	HC61	HC51	HC52
W.P. [BAR]:	314	314	314	314	314	314	314	314	314	314	314	314	314									627	627		627			50	627	627
RETURN CONFIGURATION:																						SM	SM		HP					
FLOW RESTRICTOR [mm]:			2 mm	2 mm	1 mm	1 mm	2 mm	2 mm	2 mm	2 mm	1 mm	1 mm	1 mm																	
Function mode: 1 Production w/IWC	LP 1	LP 2	PWV	PMV	PCV(O)	PCV(C)	AMV	AWV	XOV/MIV	SLV	CIV A	CIV C	CIV B									IWC 1	IWC 2		SCSSV			RETURN	HP 1	HP 2
Function mode: 2 Production w/o IWC	LP 1	LP 2	PWV	PMV	PCV(O)	PCV(C)	AMV	AWV	XOV/MIV	SLV	CIV A	CIV C	CIV B									NOTE 1	NOTE 1		SCSSV			RETURN	HP 1	HP 2
Function mode: 3 WOCS Prod. w/o IWC	LP 1	LP 2	PWV	PMV	PCV(O)	PCV(C)	AMV	AWV	XOV/MIV	SLV	CIV A	CIV C	CIV B									NOTE 1	NOTE 1		SCSSV			RETURN	HP 1	HP 2
Function mode: 4 WOCS Prod. w/IWC	LP 1	LP 2	PWV	PMV	PCV(O)	PCV(C)	AMV	AWV	XOV/MIV	SLV	CIV A	CIV C	CIV B									IWC 1	IWC 2		SCSSV			RETURN	HP 1	HP 2
NOTE:	NOTE 2	COVLP 10K	NOTE 2	NOTE 2	NOTE 2	NOTE 2	NOTE 2	NOTE 2	NOTE 2	NOTE 2	NOTE 2	NOTE 2	NOTE 2									NOTE 3	NOTE 3		NOTE 3				NOTE 3	COVHP 15K

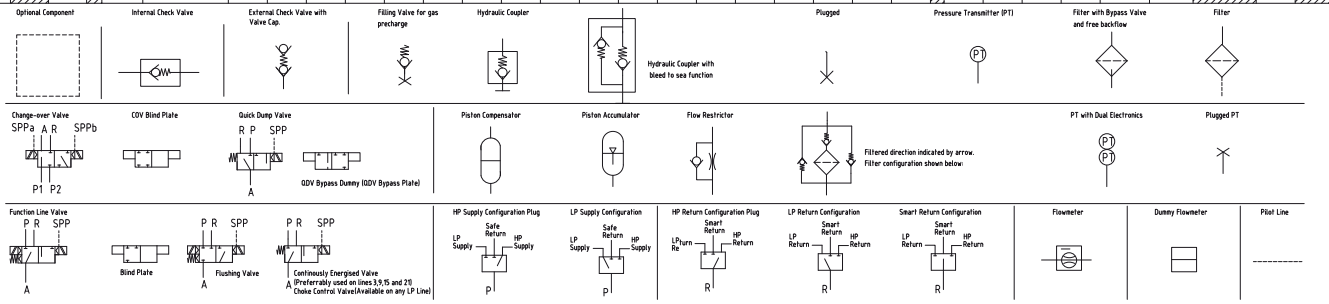

DA600057443 / AO-045-SG-2000-150017

SCM Hydraulic schematic, Production

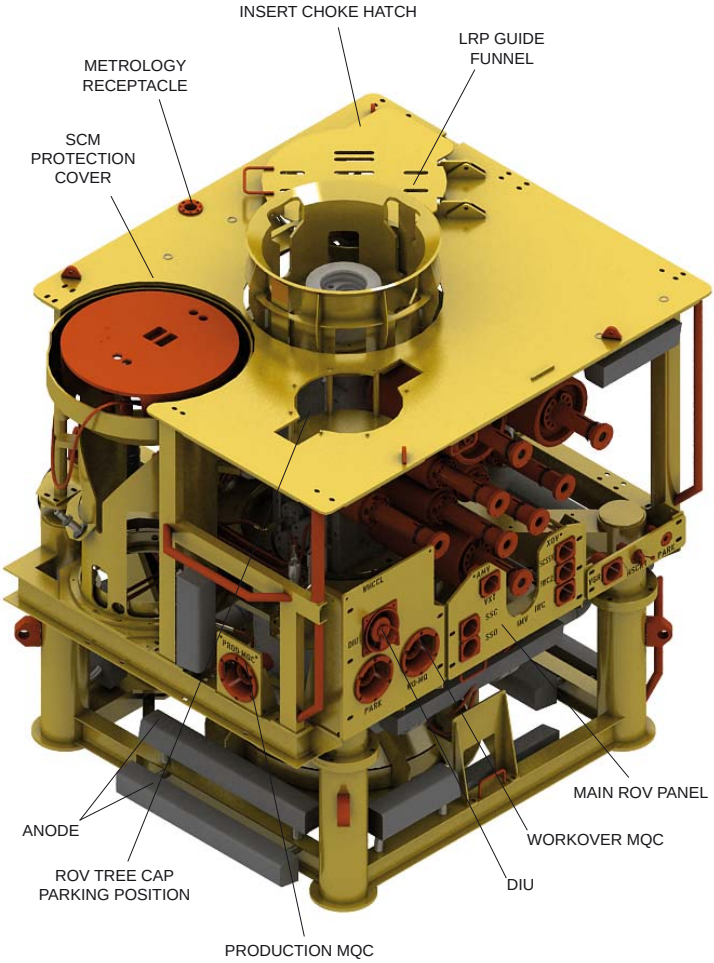
INSERT CHOKE HATCH
LRP GUIDE FUNNEL
METROLOGY RECEPTACLE
SCM PROTECTION COVER
MAIN ROV PANEL
ANODE
WORKOVER MQC
ROV TREE CAP PARKING POSITION
DIU
PRODUCTION MQC

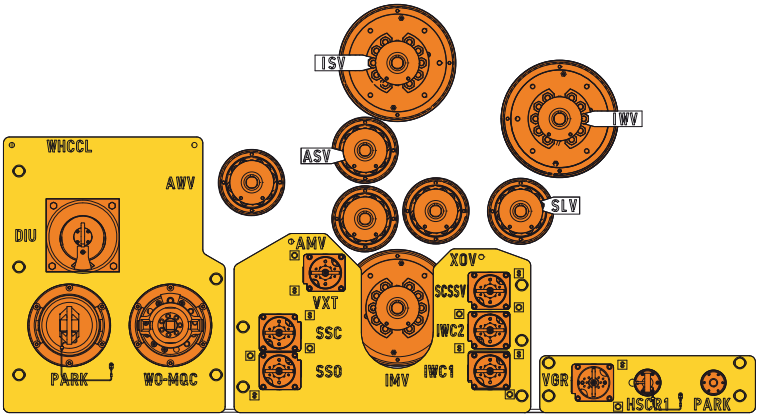

ROTARY OVERRIDE INTERFACES							
Label	Type	Description	ROV Interface	No. of Turns	Direction to Close / Engage	Torque	
						Nominal	Max. Op.
VXT	Needle Valve	½" – 15K, Block Mounted, Oliver Needle Valve	ISO 13628-8 Type B (operate with FMC special tool)	3/4±15°	CW	90 lbf-ft (122 Nm)	200 lbf-ft (271 Nm)
SSC	Needle Valve	½" – 10K, Block Mounted, Oliver Needle Valve	ISO 13628-8 Type B (operate with FMC special tool)	3/4±15°	CW	90 lbf-ft (122 Nm)	200 lbf-ft (271 Nm)
SSO	Needle Valve	½" – 10K, Block Mounted, Oliver Needle Valve	IISO 13628-8 Type B (operate with FMC special tool)	3/4±15°	CW	90 lbf-ft (122 Nm)	200 lbf-ft (271 Nm)
IWC1	Needle Valve	½" – 10K, Block Mounted, Oliver Needle Valve	ISO 13628-8 Type B (operate with FMC special tool)	3/4±15°	CW	90 lbf-ft (122 Nm)	200 lbf-ft (271 Nm)
IWC2	Needle Valve	½" – 10K, Block Mounted, Oliver Needle Valve	ISO 13628-8 Type B (operate with FMC special tool)	3/4±15°	CW	90 lbf-ft (122 Nm)	200 lbf-ft (271 Nm)
VGR	Needle Valve	½" – 10K, Panel Mounted, Oliver Needle Valve	ISO 13628-8 Type B (operate with FMC special tool)	3/4±15°	CW	90 lbf-ft (122 Nm)	200 lbf-ft (271 Nm)
SCSSV	Needle Valve	½" – 10K, Panel Mounted, Oliver Needle Valve	ISO 13628-8 Type B (operate with FMC special tool)	3/4±15°	CW	90 lbf-ft (122 Nm)	200 lbf-ft (271 Nm)
CV	Choke	MasterFlo P4 - 10K	ISO 13628-8 Class 4	20	CW	50 lbf-ft (68 Nm)	275 lbf-ft (373 Nm)

ROV Panel - XT Injection

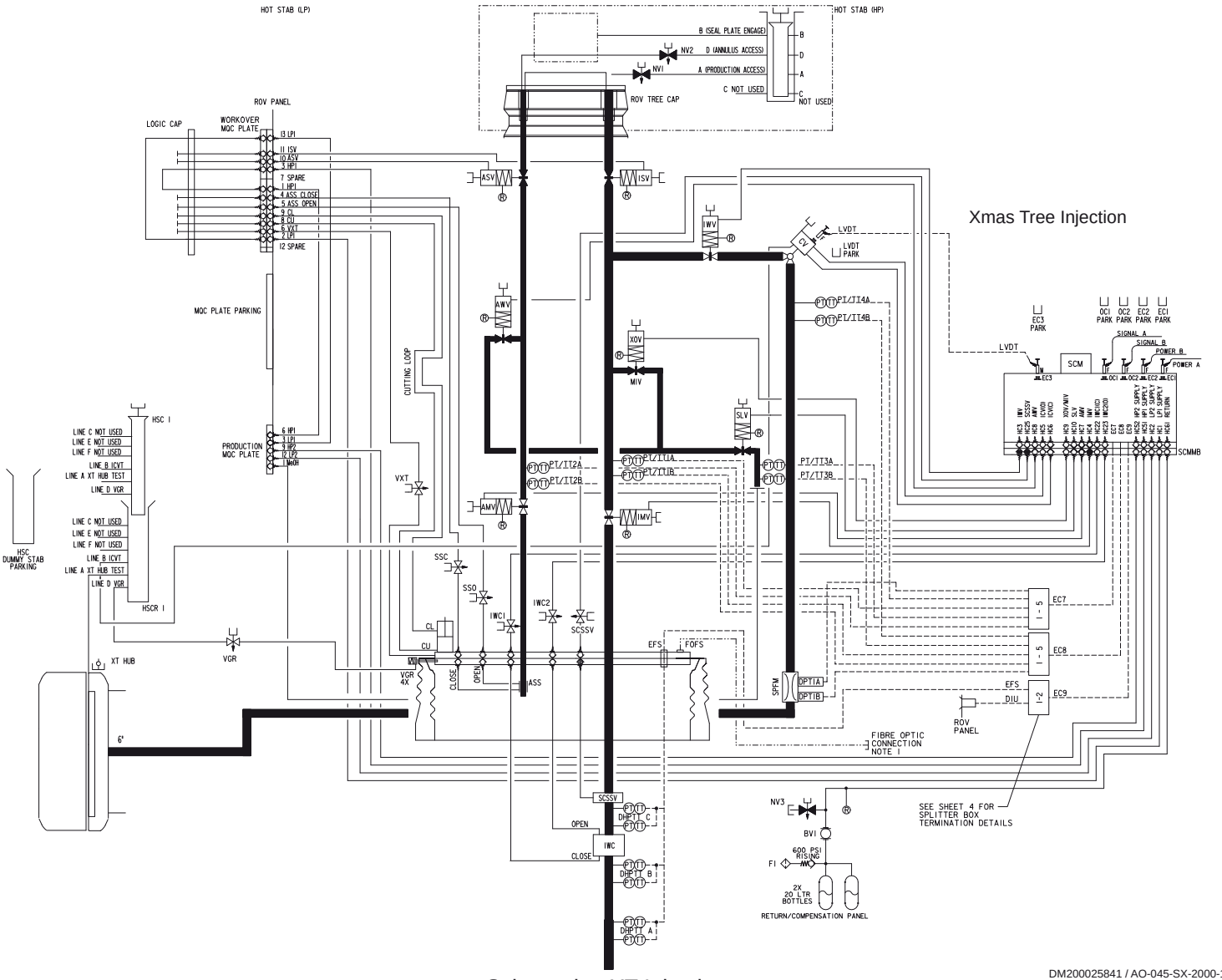

Xmas Tree Injection

DM200025841 / AO-045-SX-2000-120461

Schematic - XT Injection

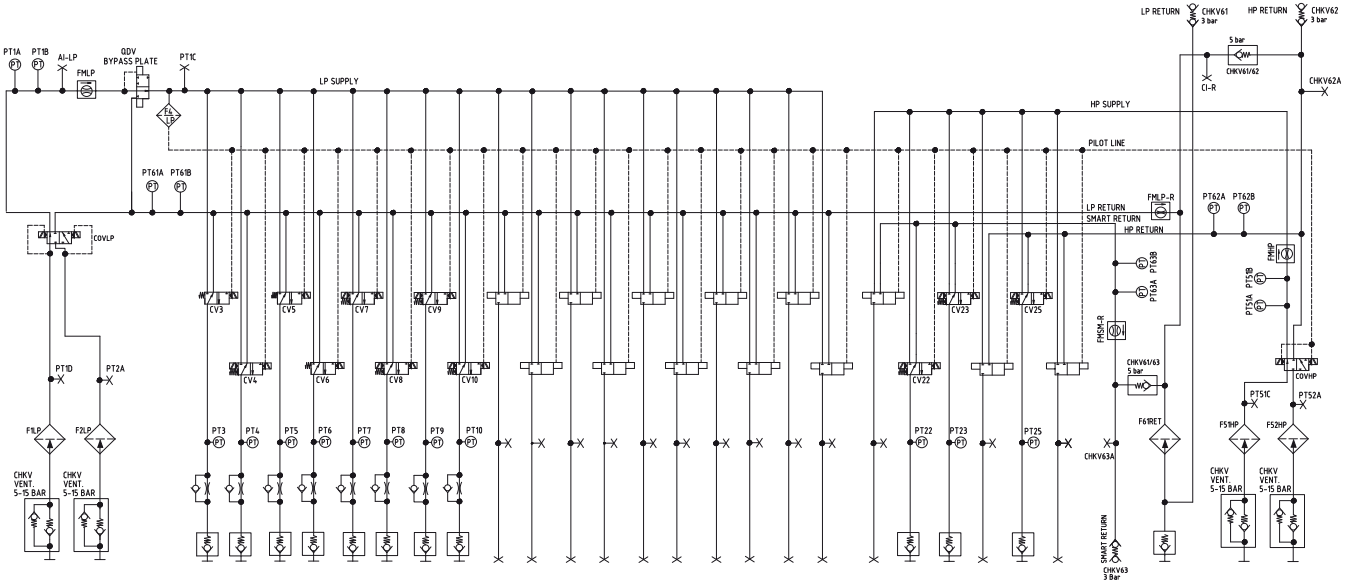

HYDR. LINES:	HC1	HC2	HC3	HC4	HC5	HC6	HC7	HC8	HC9	HC10	HC11	HC12	HC13	HC14	HC15	HC16	HC17	HC18	HC19	HC20	HC21	HC22	HC23	HC24	HC25	HC26	NOTE 4	HC61	HC51	HC52
W.P. (BAR):	314	314	314	314	314	314	314	314	314	314												627	627		627			50	627	627
RETURN CONFIGURATION:																						SM	SM		HP					
FLOW RESTRICTOR (mm):			2 mm	2 mm	1 mm	1 mm	2 mm	2 mm	2 mm	2 mm																				
Function mode: 1 W.I. w/IWC	LP 1	LP 2	IWV	IMV	ICV(O)	ICV(C)	AMV	AWV	KOV/MIV	SLV												IWC 1	IWC 2		SCSSV			RETURN	HP 1	HP 2
Function mode: 2 W.I. w/o IWC	LP 1	LP 2	IWV	IMV	ICV(O)	ICV(C)	AMV	AWV	KOV/MIV	SLV												NOTE 1	NOTE 1		SCSSV			RETURN	HP 1	HP 2
Function mode: 3 WOCS W.I. w/o IWC	LP 1	LP 2	IWV	IMV	ICV(O)	ICV(C)	AMV	AWV	KOV/MIV	SLV												NOTE 1	NOTE 1		SCSSV			RETURN	HP 1	HP 2
Function mode: 4 WOCS W.I. w/IWC	LP 1	LP 2	IWV	IMV	ICV(O)	ICV(C)	AMV	AWV	KOV/MIV	SLV												IWC 1	IWC 2		SCSSV			RETURN	HP 1	HP 2
NOTE:	NOTE 2	COVLP 10K	The same hydraulic block as PXT SCM	NOTE 2	NOTE 2	NOTE 2	NOTE 2	NOTE 2	NOTE 2	NOTE 2												NOTE 3	NOTE 3		NOTE 3				NOTE 3	COVHP 15K

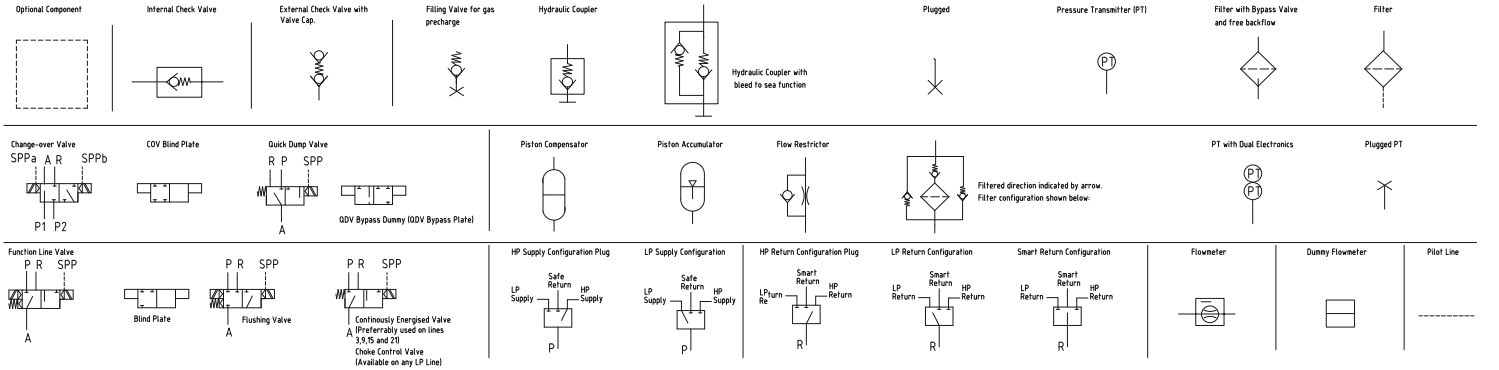

DA600057443 / AO-045-SG-2000-150017

SCM Hydraulic schematic, Injection

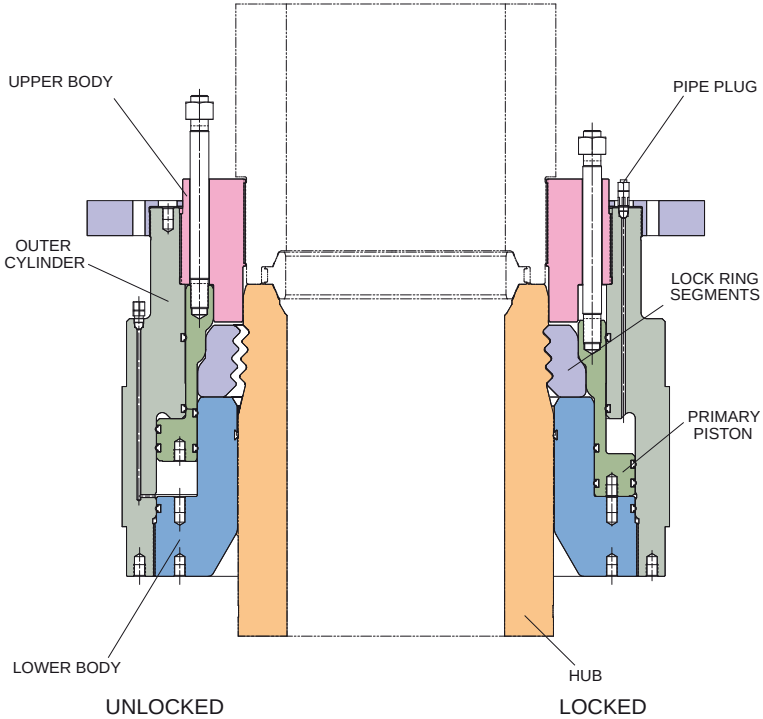

Torus IV connector

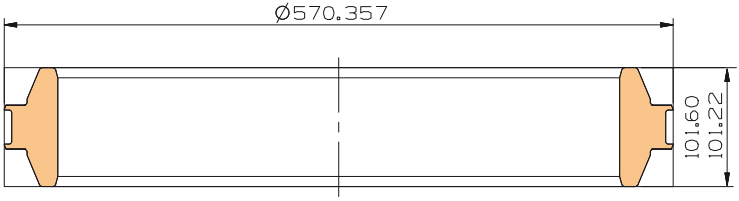

18 3/4” VX Gasket

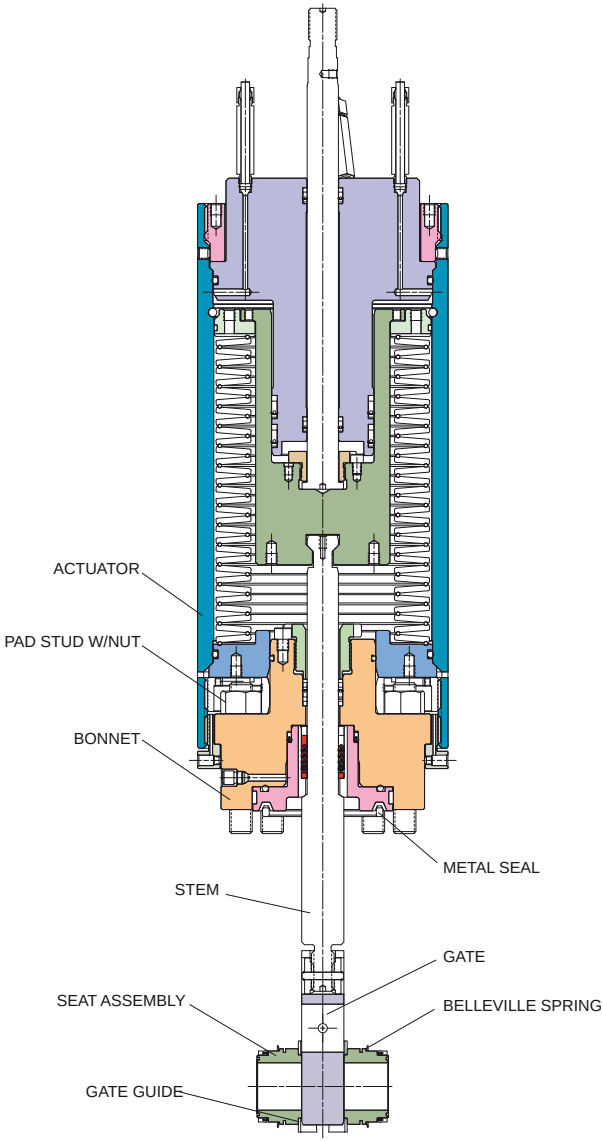

Gate Valve 2 1/16”

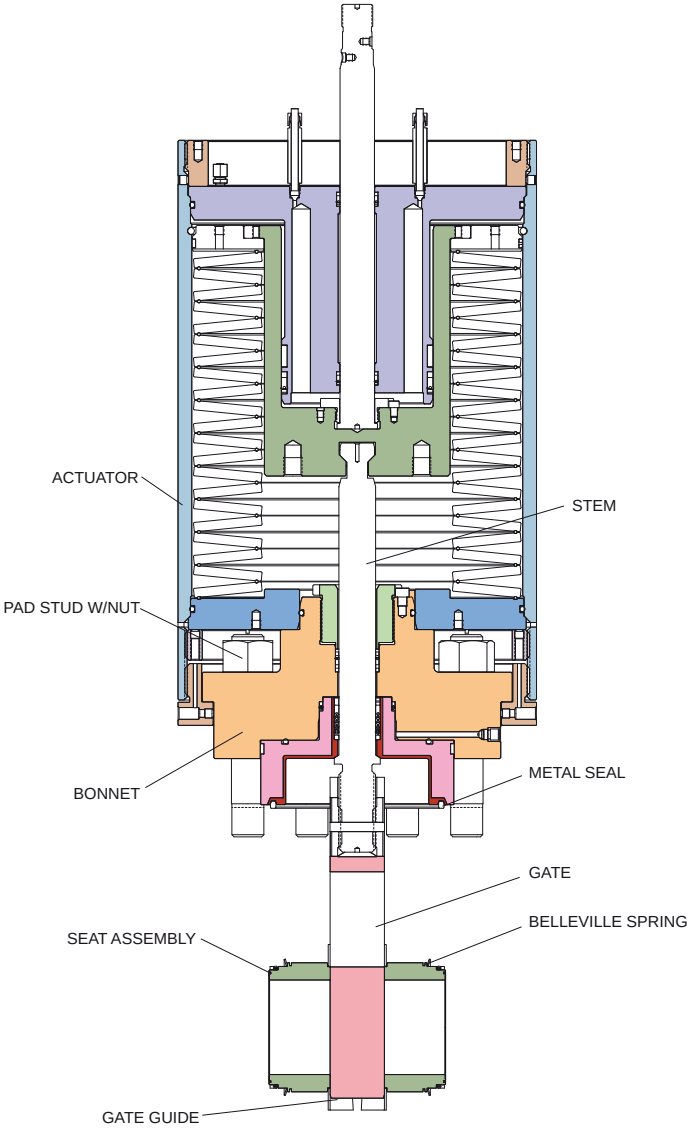

Gate Valve 5 1/8”

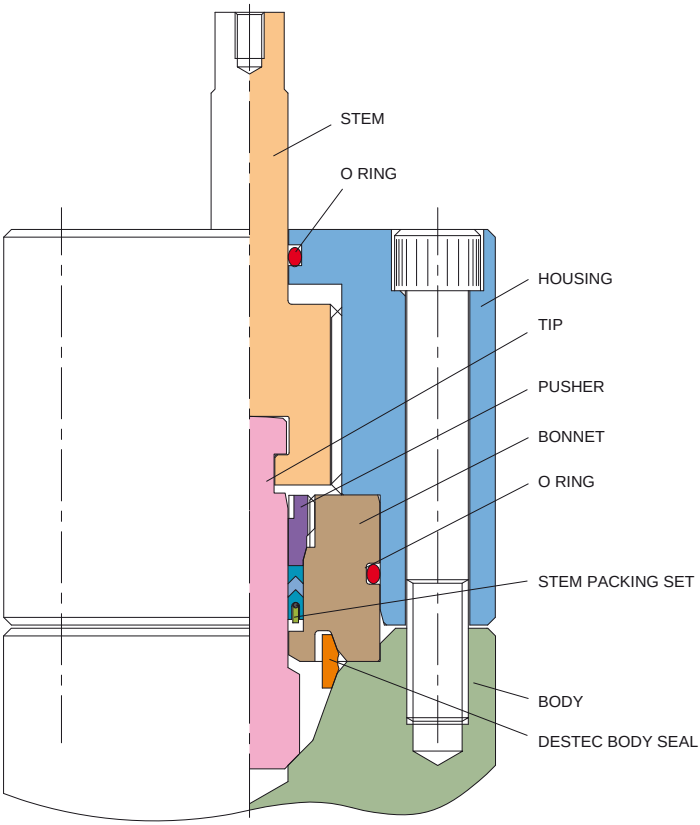

1/2” Oliver Needle Valve

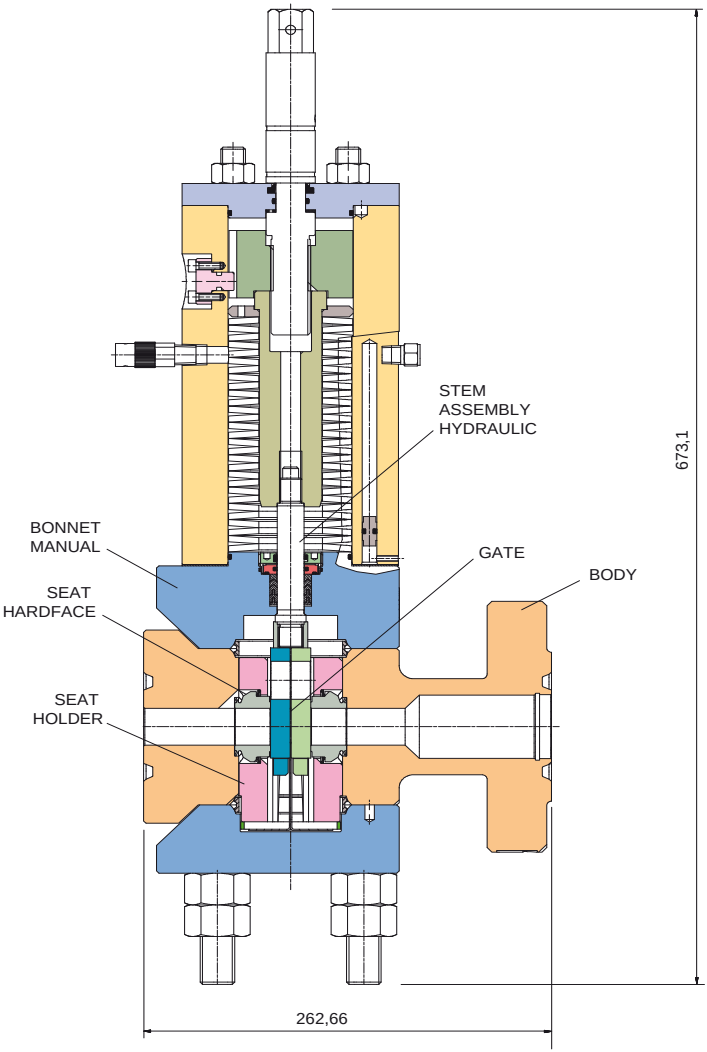

1” Bentley Gate Valve

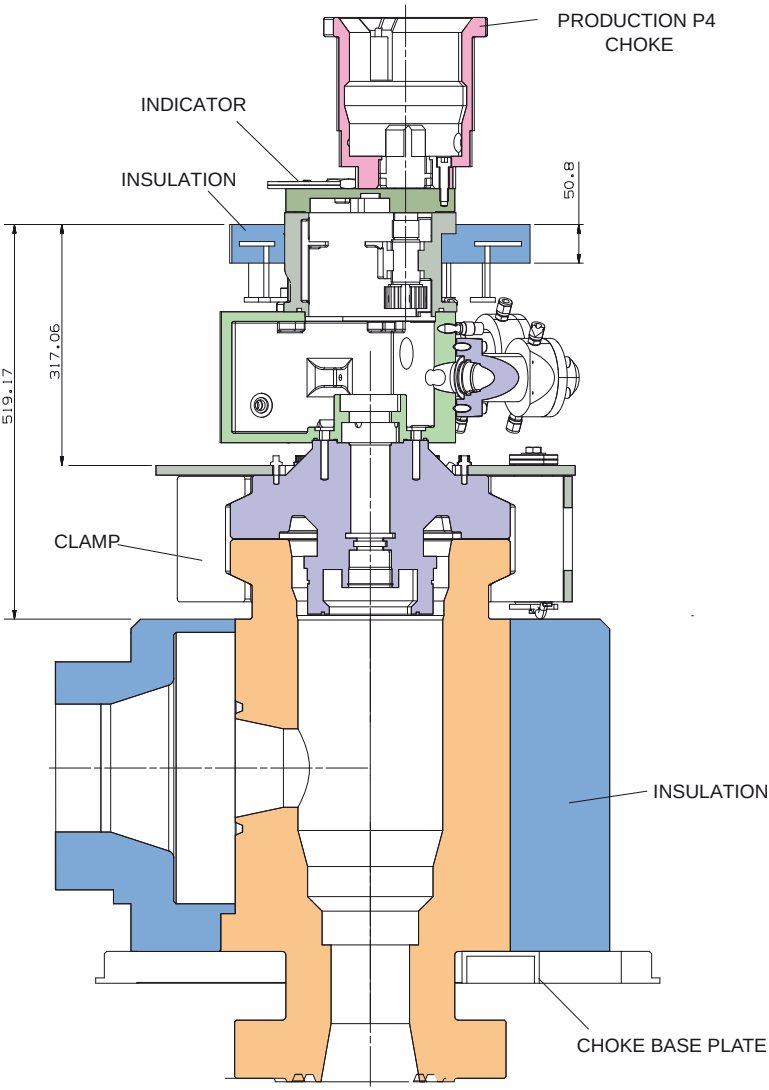

Insert Choke

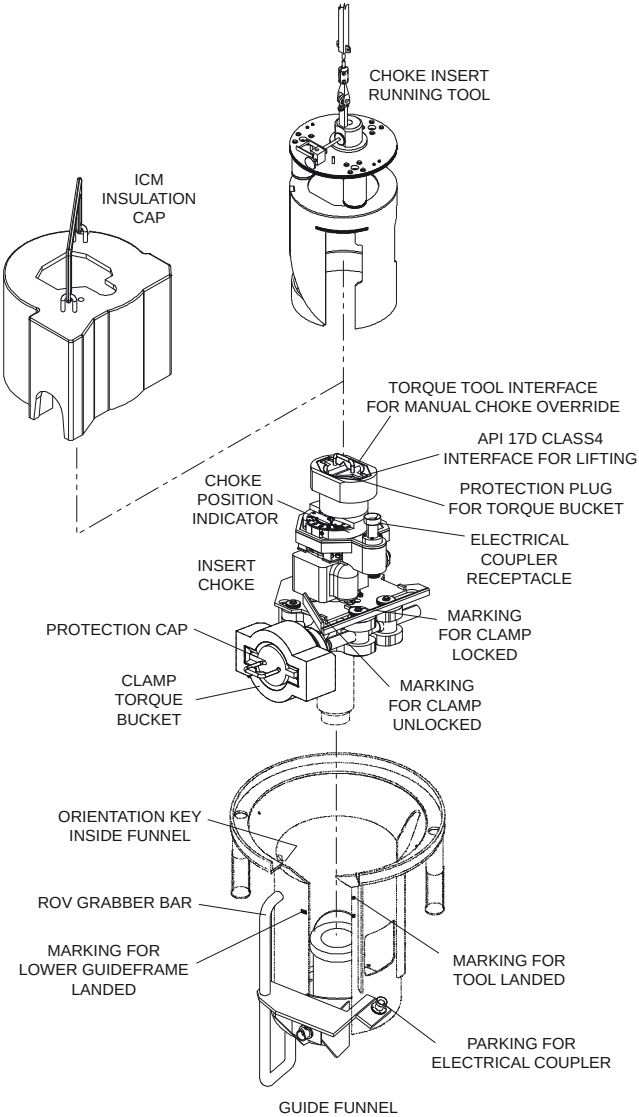

Insert Choke

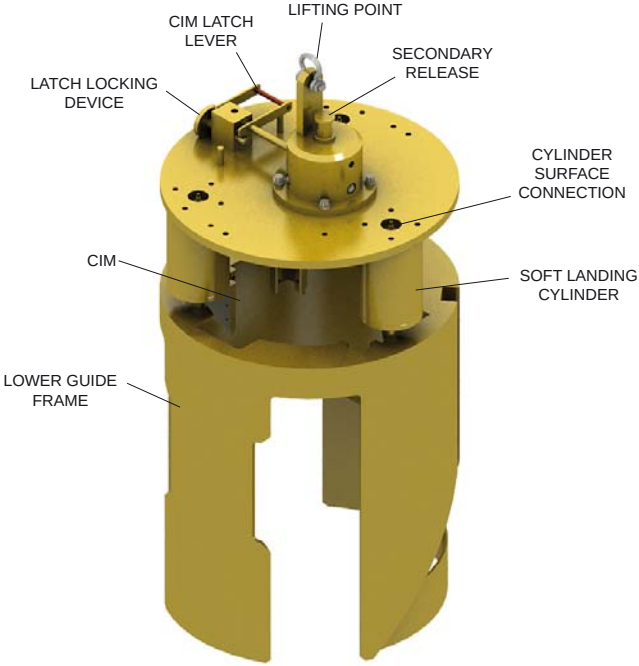

Choke Running Tool

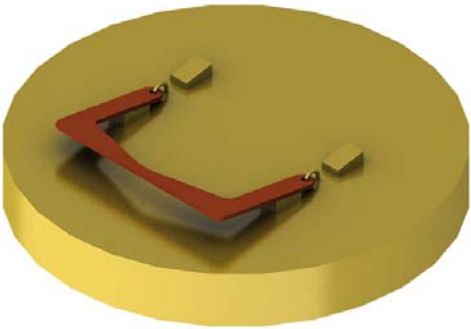

Tree Insulation Cap

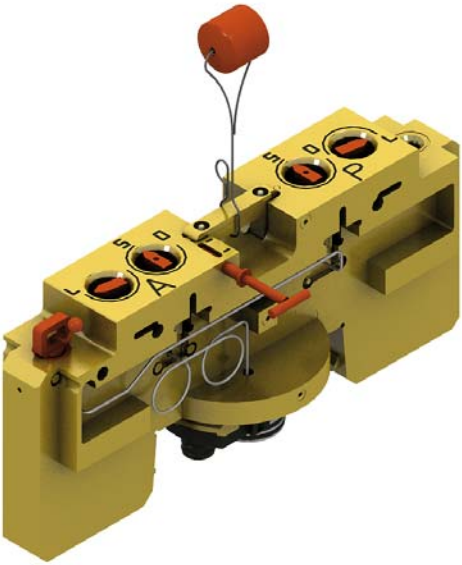

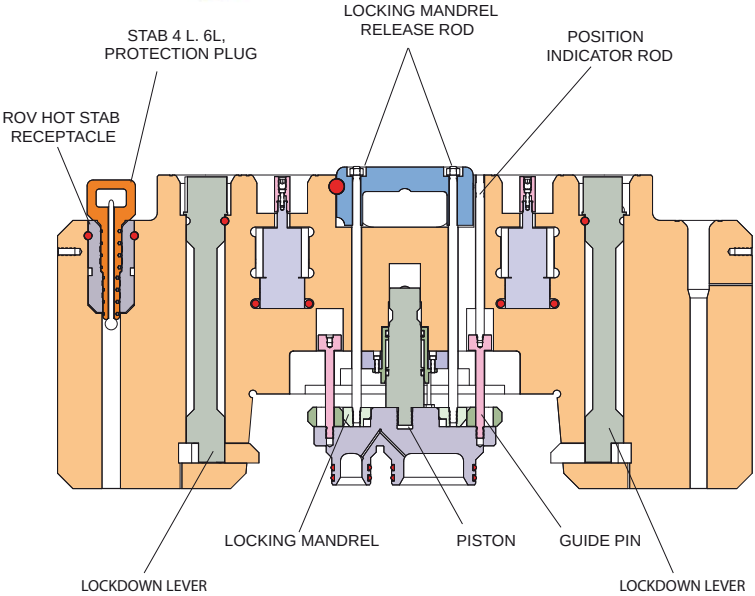
LOCKING MANDREL
RELEASE ROD
STAB 4 L. 6L,
PROTECTION PLUG
POSITION
INDICATOR ROD
ROV HOT STAB
RECEPTACLE
LOCKING MANDREL
PISTON
GUIDE PIN
LOCKDOWN LEVER
LOCKDOWN LEVER

Tree Cap

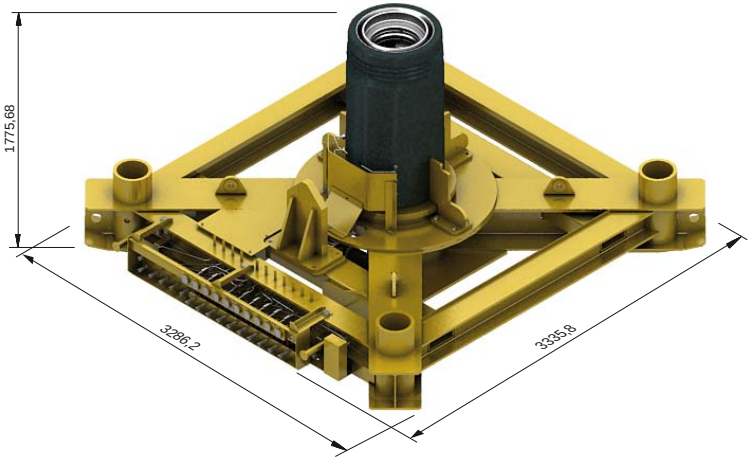

XT TEST STUMP with VX profile

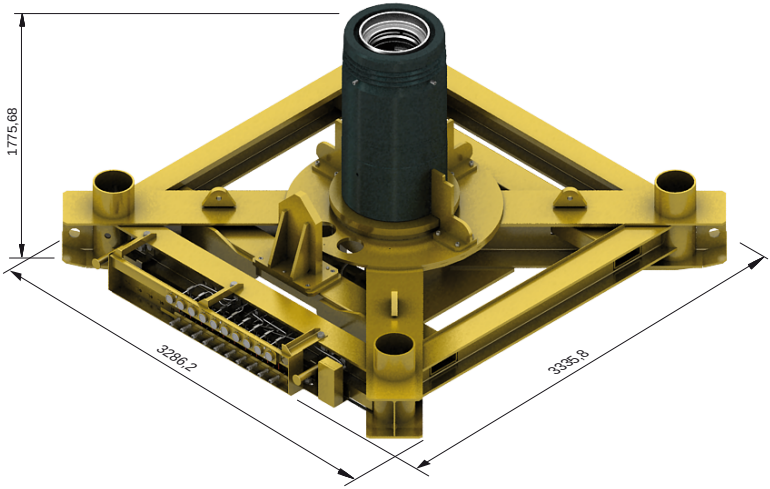

XT TEST STUMP without VX profile

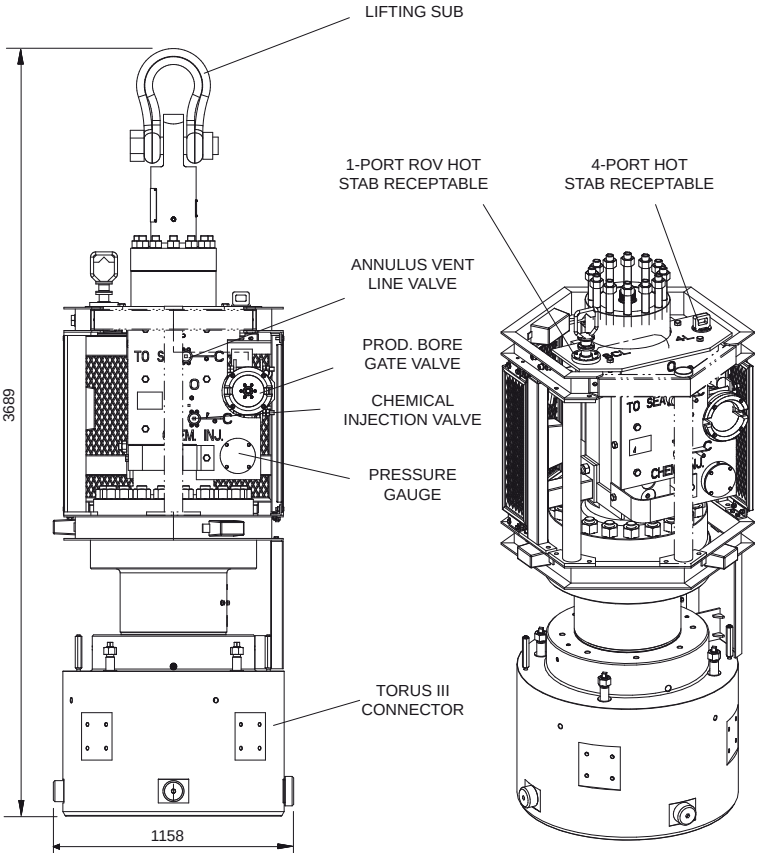

XT Running Tool with Lifting Sub

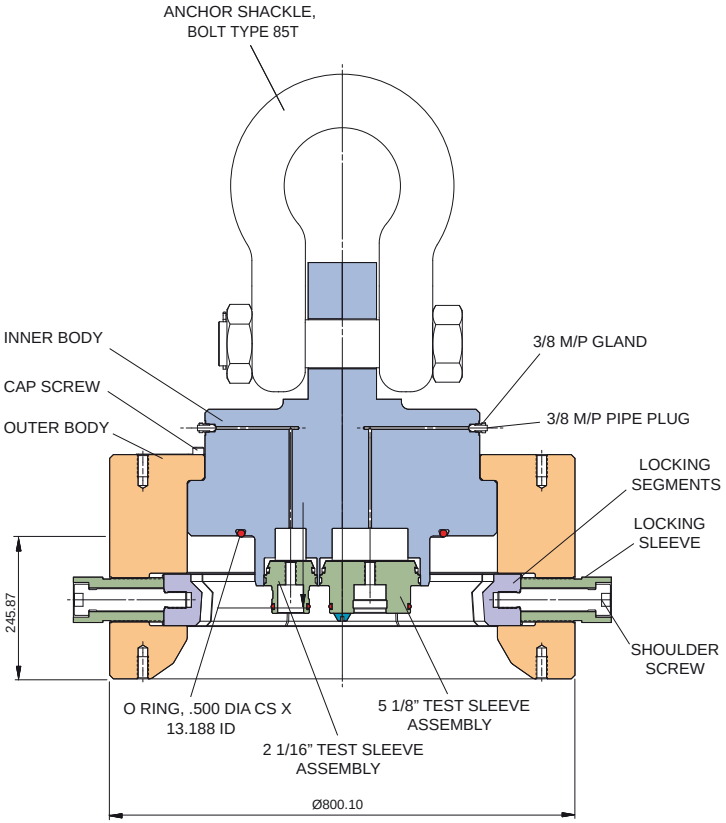

XT Handling & Test Tool

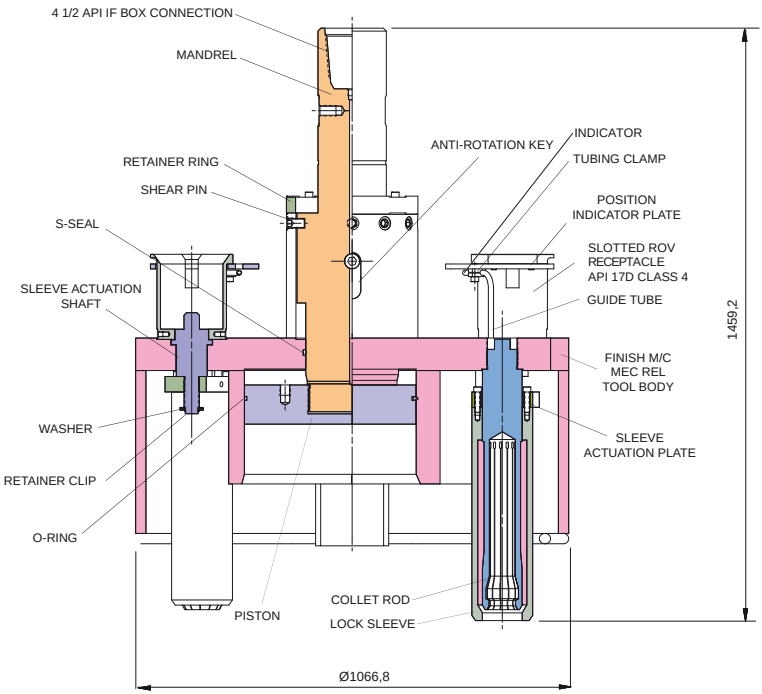
4 1/2 API IF BOX CONNECTION
MANDREL
RETAINER RING
SHEAR PIN
S-SEAL
SLEEVE ACTUATION SHAFT
WASHER
RETAINER CLIP
O-RING
PISTON
ANTI-ROTATION KEY
INDICATOR
TUBING CLAMP
POSITION INDICATOR PLATE
SLOTTED ROV RECEPTACLE API 17D CLASS 4
GUIDE TUBE
FINISH M/C MEC REL TOOL BODY
SLEEVE ACTUATION PLATE
COLLET ROD
LOCK SLEEVE
1459,2
Ø1066,8

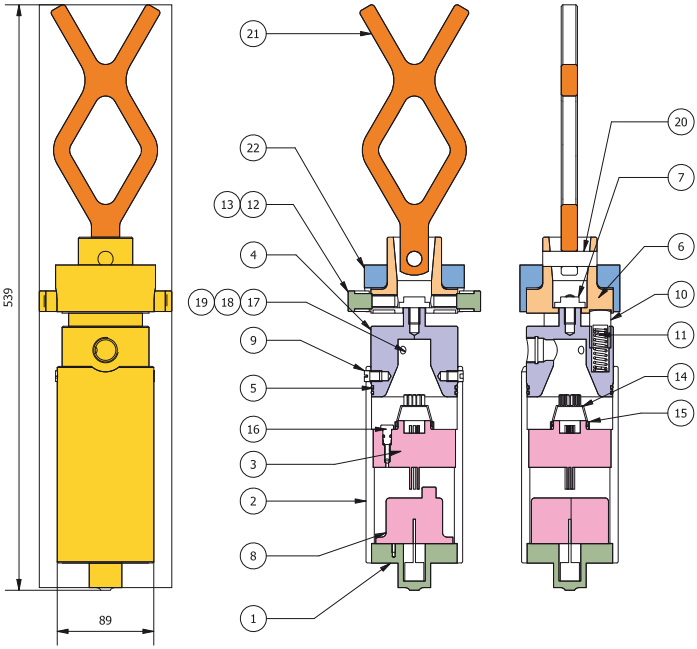

Penetrator top view

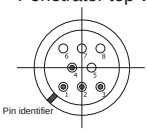

ITEM	DESCRIPTION
1	Sensor front compact
2	Tube Singel elecronic
3	Penetrator Compact Monitor
4	Cap Bennex
5	O-ring forsensor cap
6	Retainer
7	Retainer Bolt
8	DSP - Electronics set
9	Stop screw M10
10	Guide
11	Spring

ITEM	DESCRIPTION
12	Compact Roller Bolt
13	Compact Roller
14	Boot seal for compact penetrator
15	Locking sleeve for penetrator
16	Fill screw
17	Fill screw Bennec MkII
18	O - ring fill screw 5x1
19	O - ring fill screw 6x1
20	Locking Pin
21	ROV Handle - Fishtail
22	Support Ring

Acoustic Sand Detector

SKOFLO

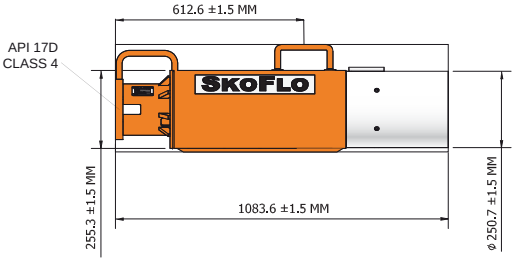

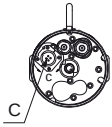

DETAIL C

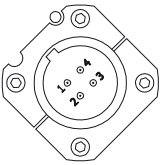

ROXAR

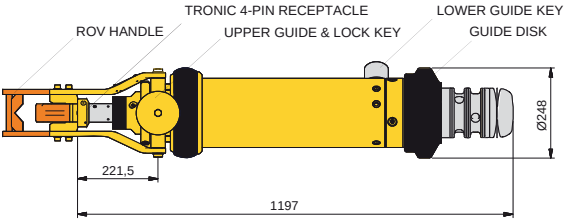

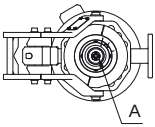

DETAIL A

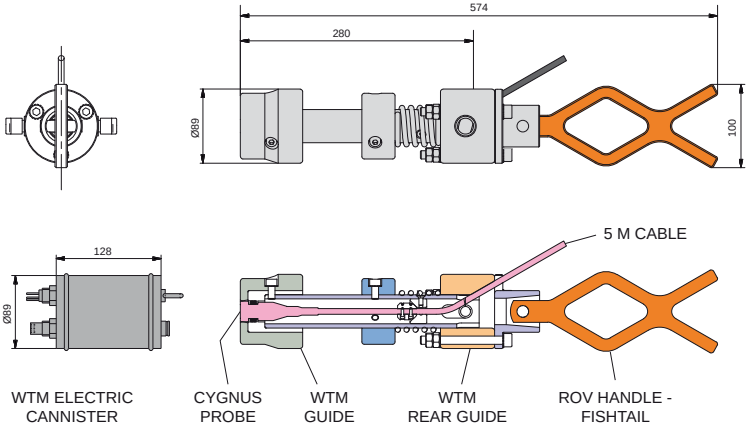
574
280
Ø89
100
128
Ø89
5 M CABLE
WTM ELECTRIC CANNISTER
CYGNUS PROBE
WTM GUIDE
WTM REAR GUIDE
ROV HANDLE - FISHTAIL

WTM

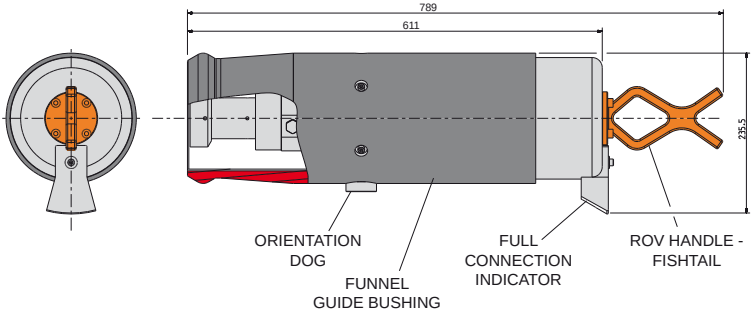
789
611
235,5
ORIENTATION DOG
FUNNEL GUIDE BUSHING
FULL CONNECTION INDICATOR
ROV HANDLE - FISHTAIL

DIU

06. Workover System - TH mode

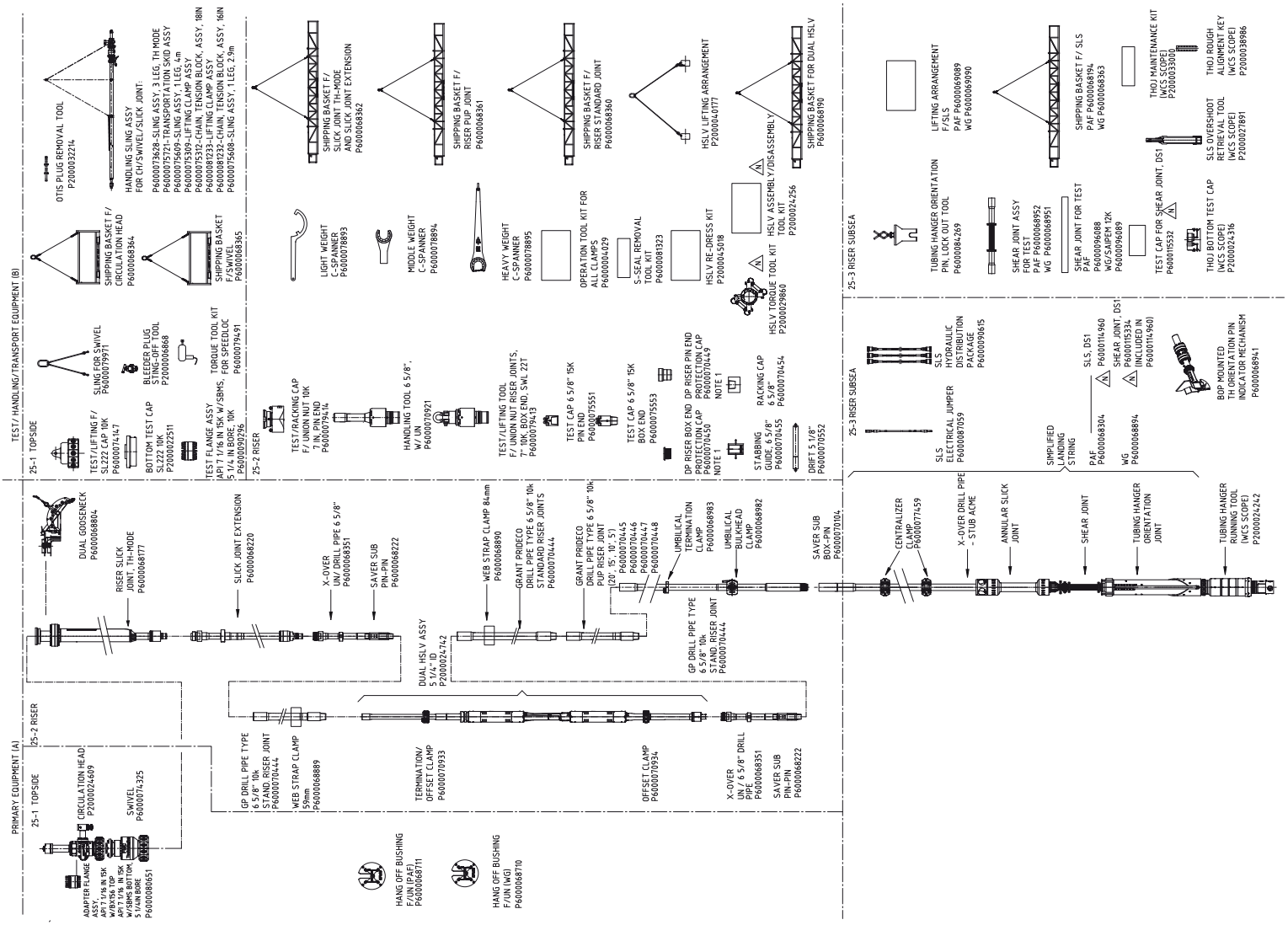

TH mode Scope of Supply

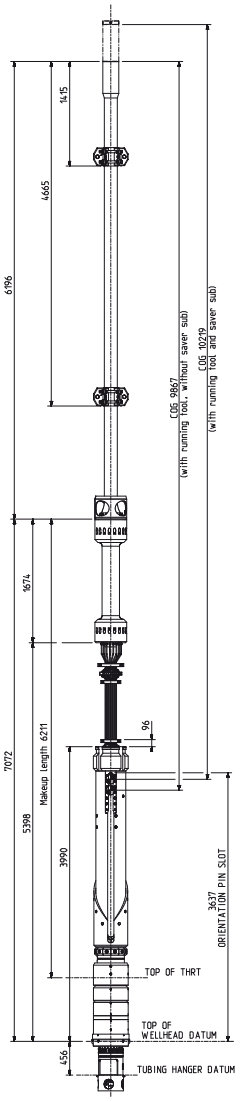

SLS DS-1

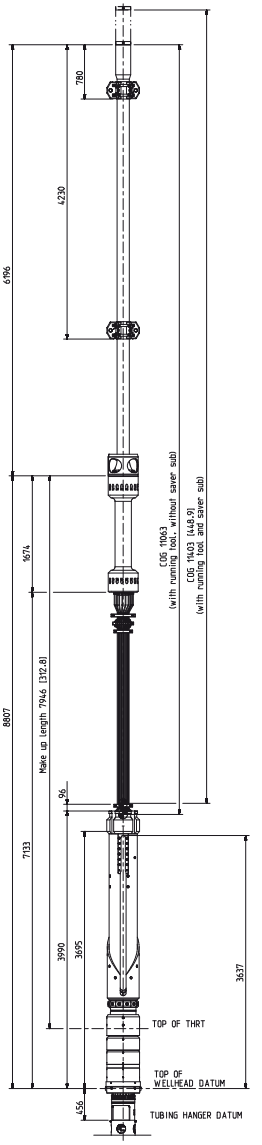

SLS West Gemini

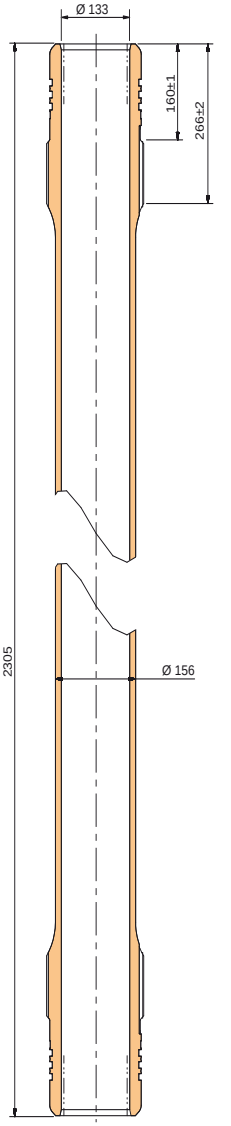

SLS Shear Joint DS-1

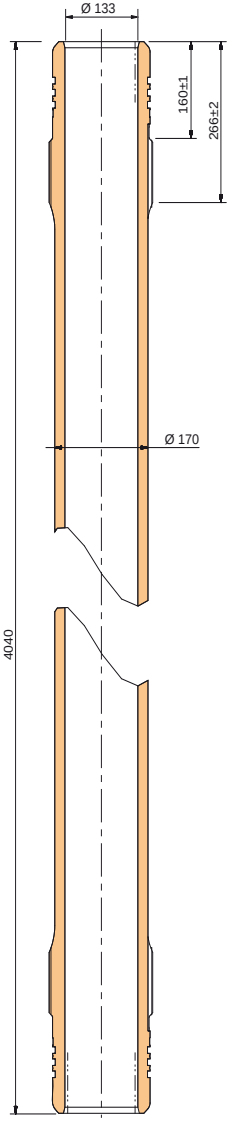

SLS Shear Joint West Gemini

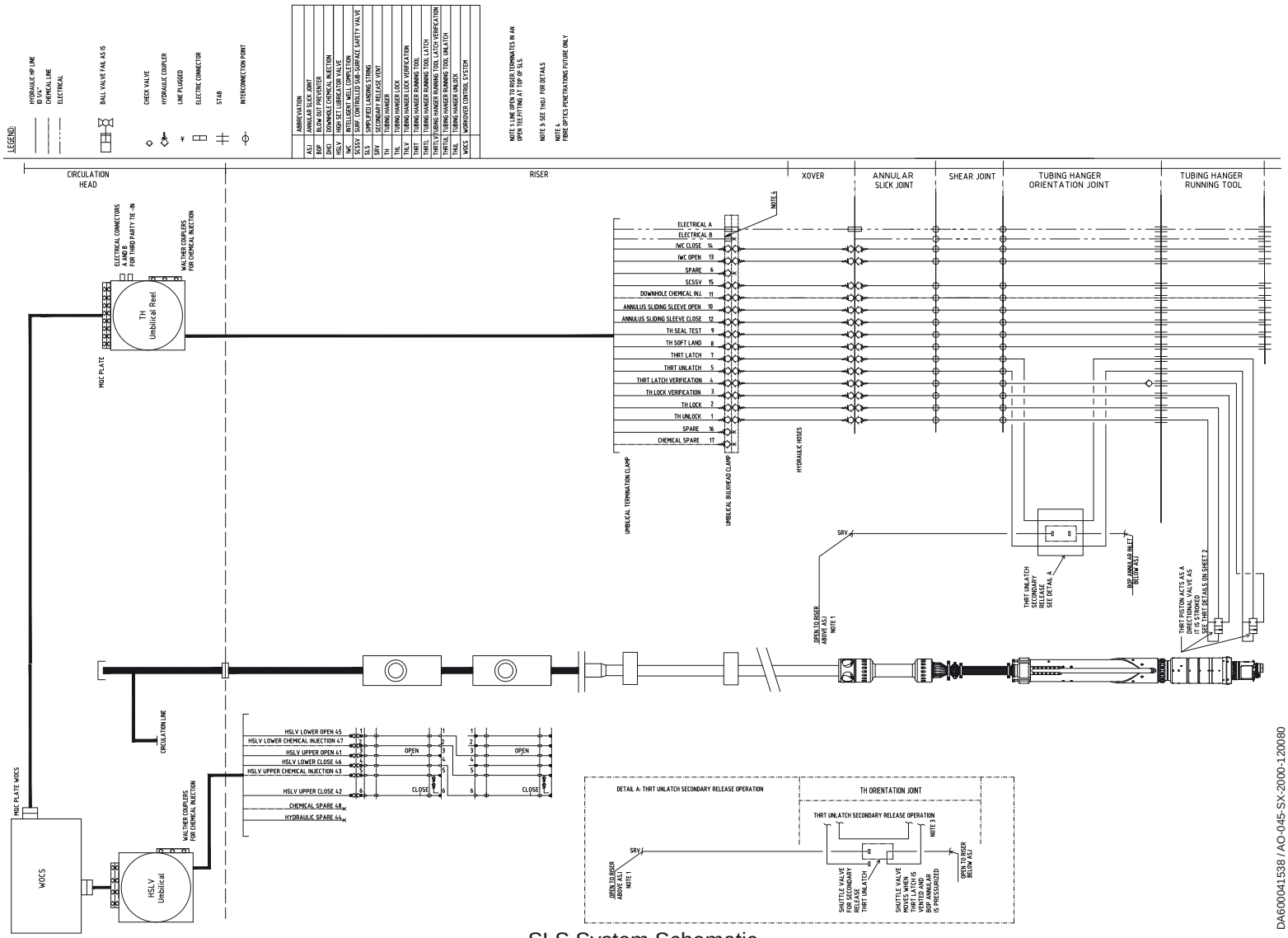

SLS System Schematic

DA600041538 / AO-045-SX-2000-120080

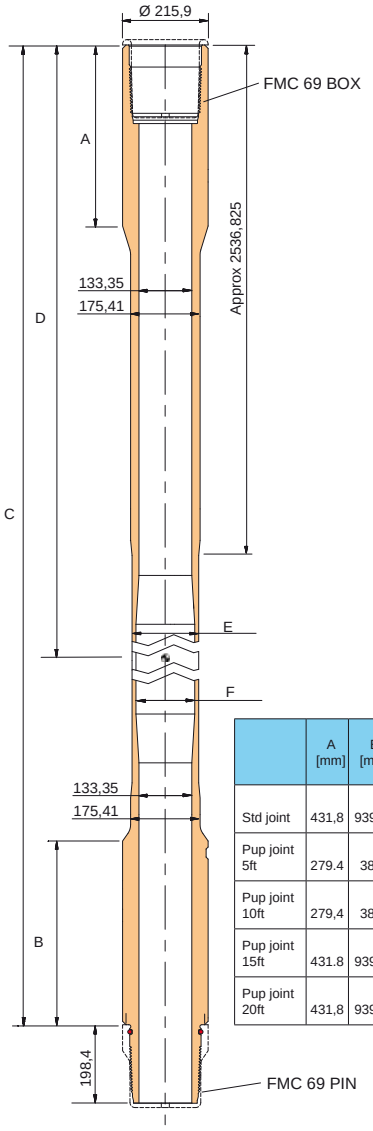

	A [mm]	B [mm]	C [mm]	D [mm]	E [mm]	F [mm]	Fluid displacement [l/m]	Fluid capacity [l/m]
Std joint	431,8	939,8	13716	7284,72	168,28	136,53	9,44	14,53
Pup joint 5ft	279.4	381	1524	914,4	-	-	15,77	13,91
Pup joint 10ft	279,4	381	3048	1701,8	-	-	12,92	13,9
Pup joint 15ft	431.8	939,8	4572	2565,4	168,28	-	14,65	13,9
Pup joint 20ft	431,8	939,8	6096	3378,2	168,28	-	12,54	13,9

Riser Joints

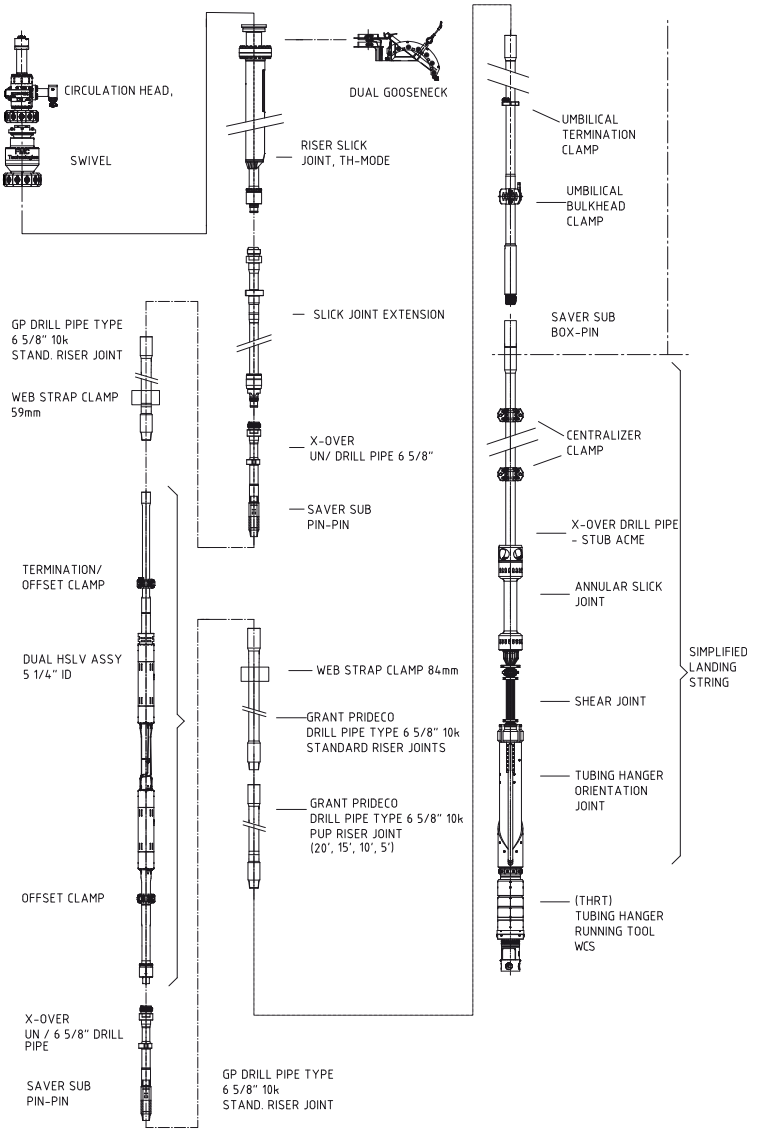

WOR Arrangement from Circulation Head to THRT in TH mode

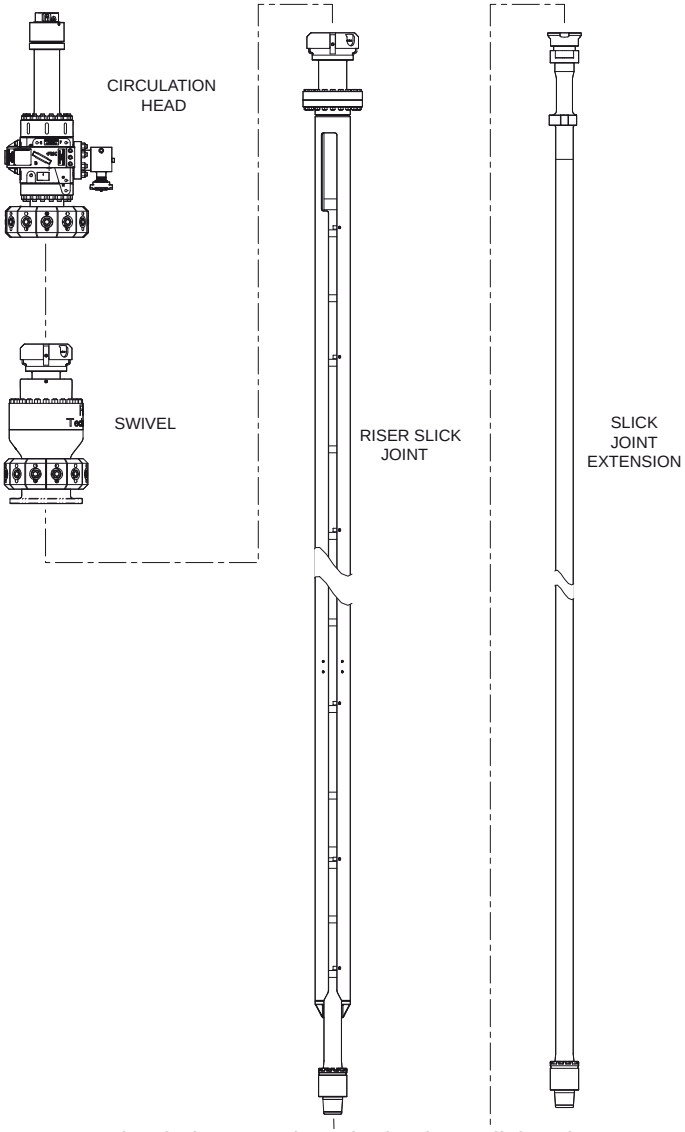

Circulation Head, Swivel, Riser Slick Joint
and Slick Joint Extension

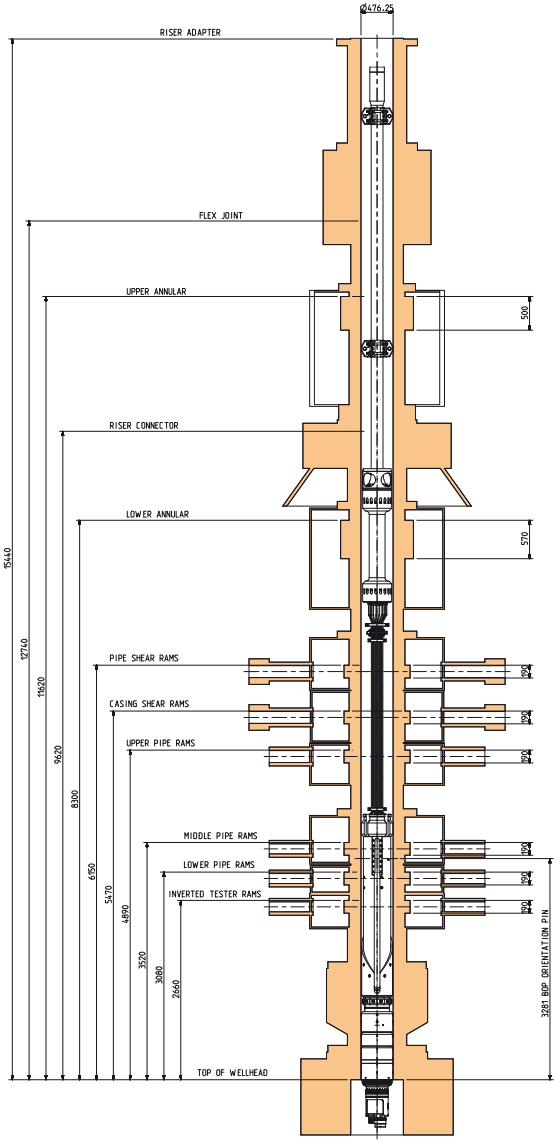

Stack-up elevations West Gemini BOP & SLS

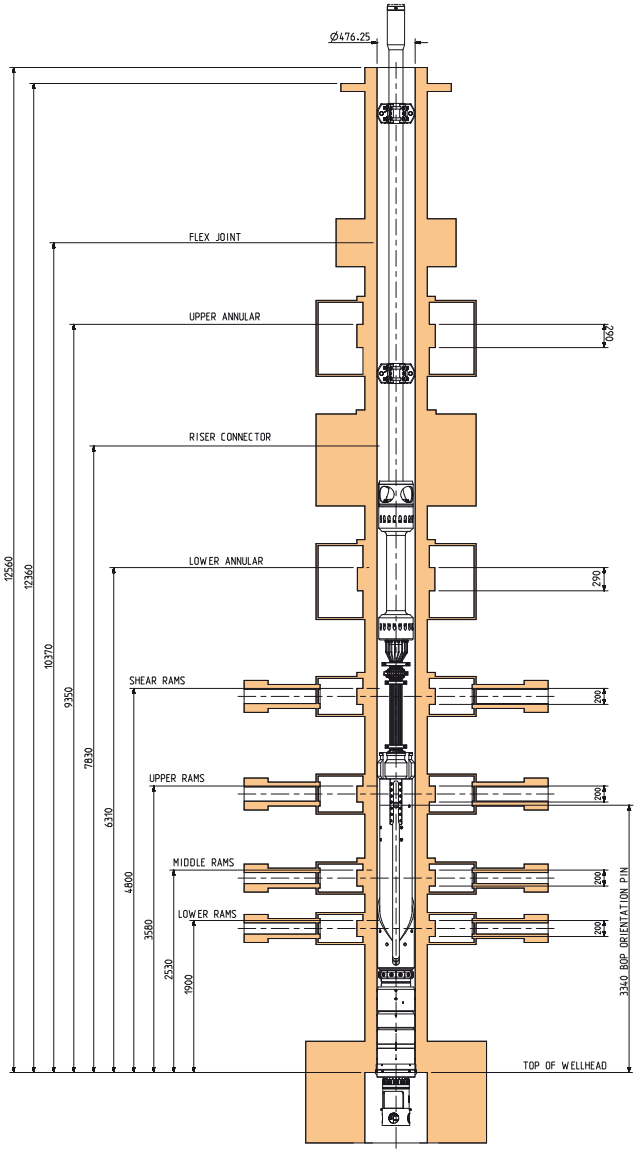

Stack-up elevations DS-1 BOP & SLS

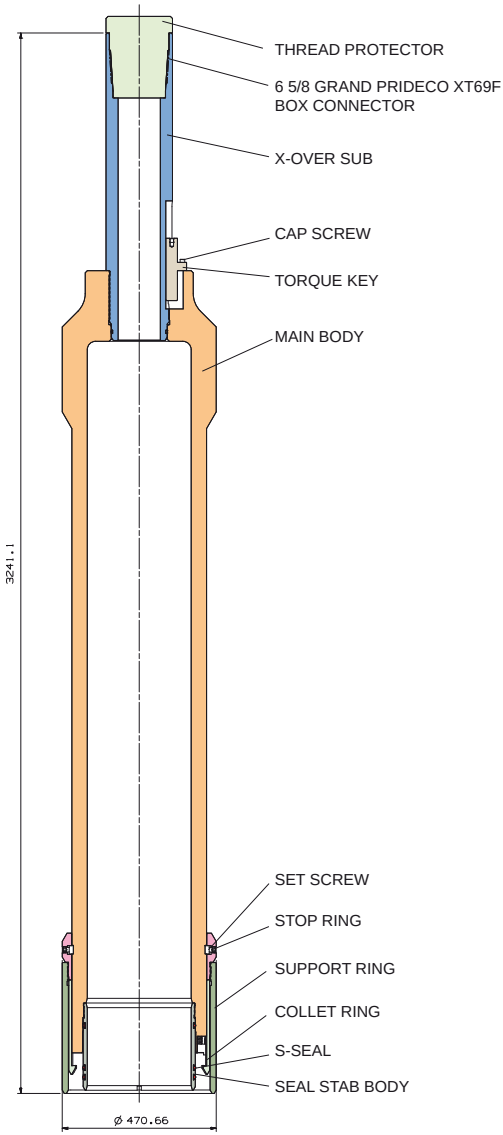

THOJ Overshot Tool

HANG OFF BUSHING F/ UN DS-1

HANG OFF BUSHING F/ UN WG

Hang off bushing TH mode

NOTES

07. Workover System - XT mode

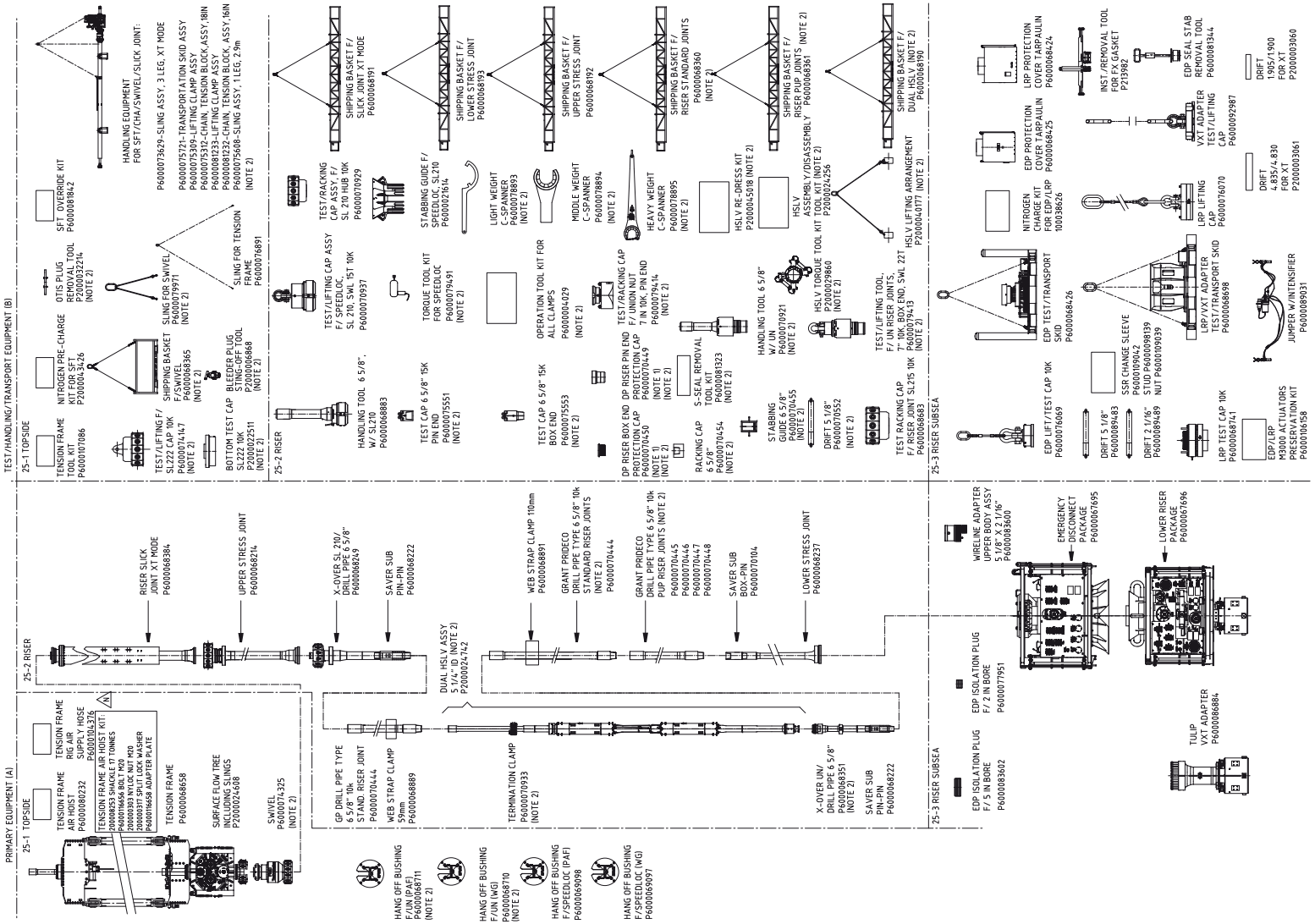

XT mode Scope of Supply

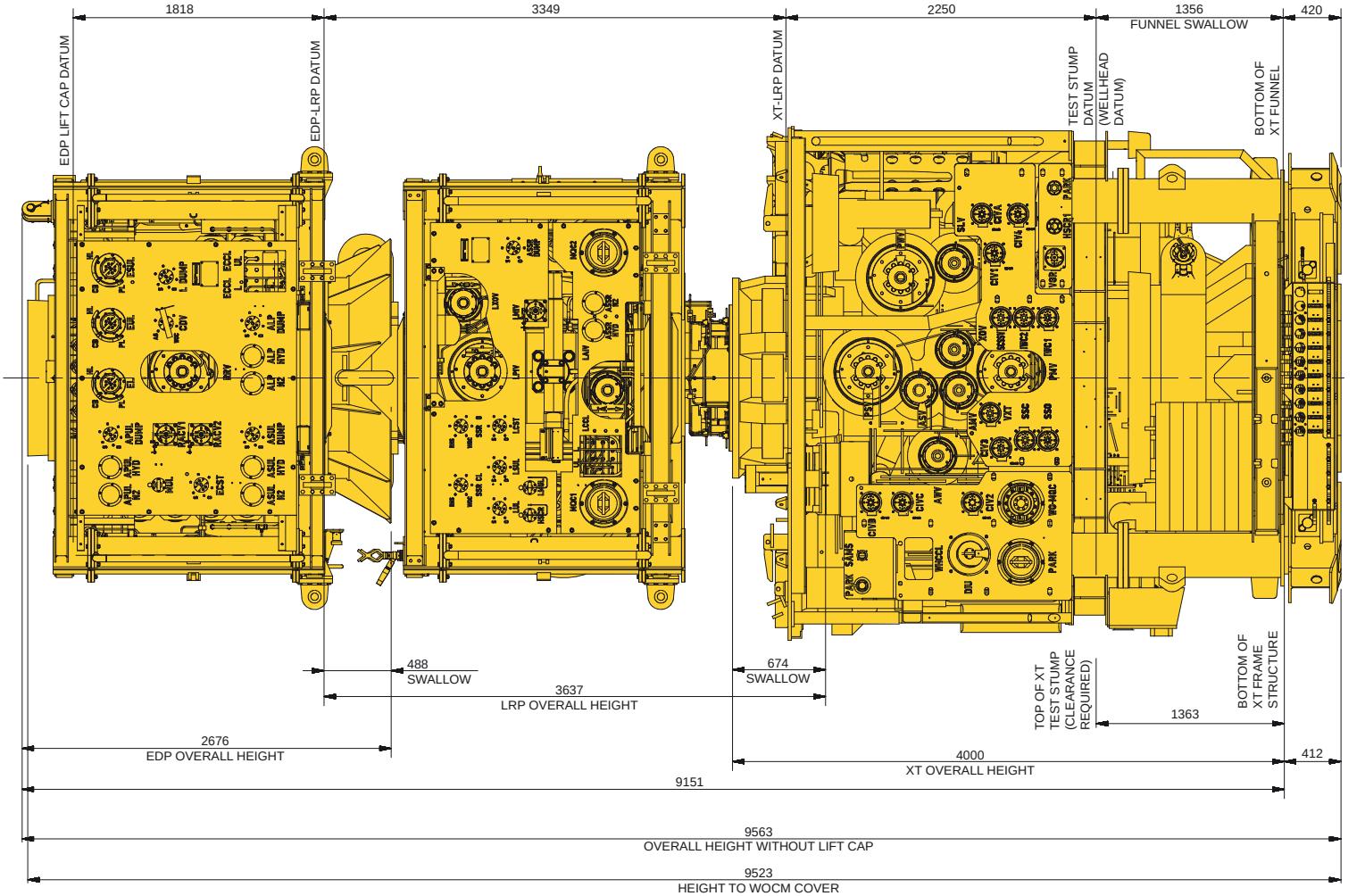

XT LRP EDP Stack-up (Production shown)

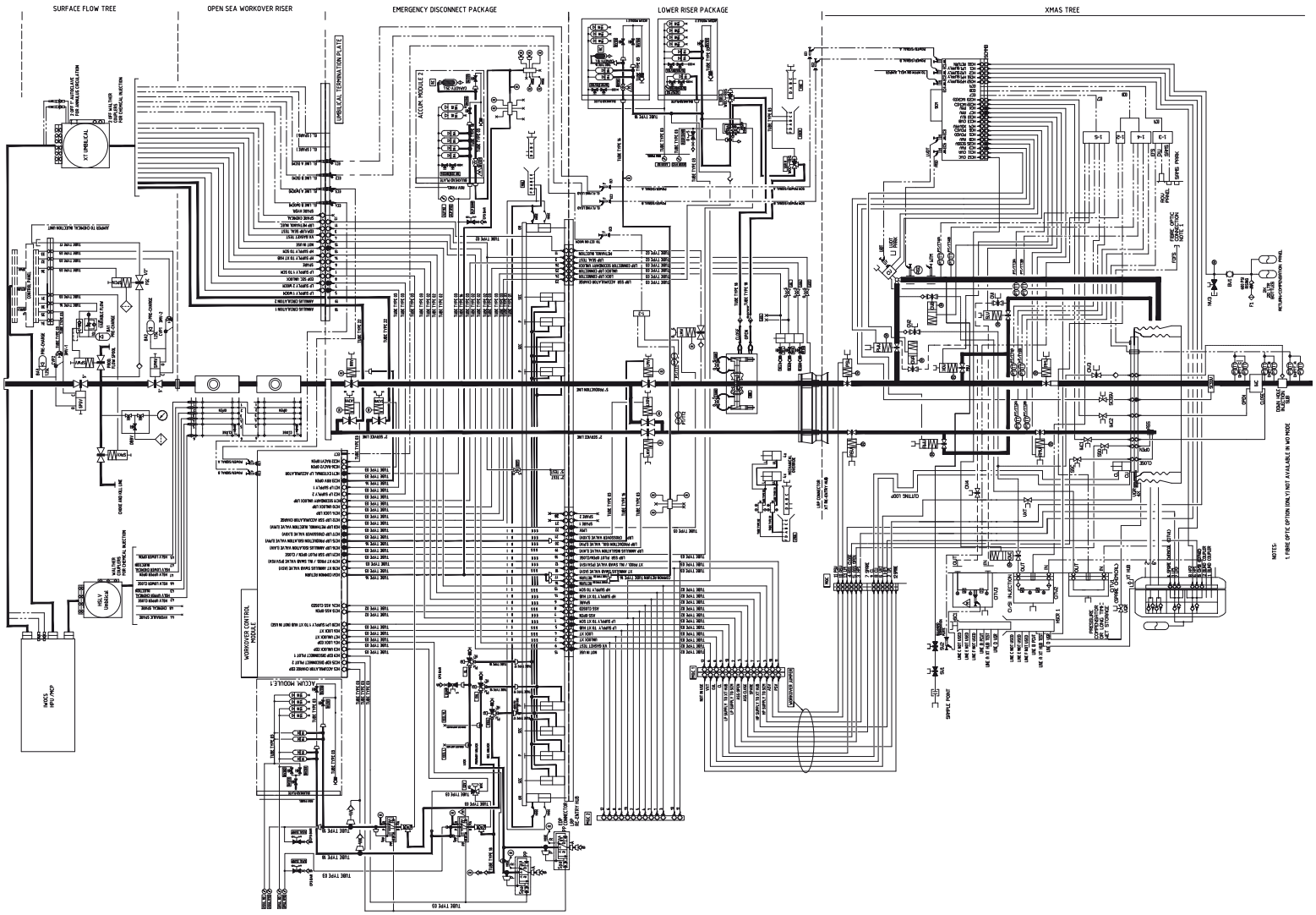

DA600041534 / AO-045-SX-2000-120079

EDP, LRP and Xmas Tree Schematic with legend

POS	GENERAL XT ABBREVIATIONS
AMV	ANNULUS MASTER VALVE
ASS	ANNULUS SLIDING SLEEVE
ASD	ACOUSTIC SAND DETECTOR
ASV	ANNULUS SWAB VALVE
AWV	ANNULUS WING VALVE
BV	BALL VALVE
CIV A,B&C	CHEMICAL ISOLATION VALVE A,B&C
CIV 1,2,3&4	CHEMICAL ISOLATION VALVE 1,2,3&4
CITV	CHEMICAL INJECTION THROTTLE VALVE
CL	CONNECTOR LOCK
CU	CONNECTOR UNLOCK
CV	CHOKE VALVE
DHPTT	DOWN HOLE PRESSURE TEMPERATURE TRANSMITTER
DIU	DIGITAL INTERFACE UNIT
EC	ELECTRICAL CONNECTOR
EFS	ELECTRICAL FEEDTHROUGH SYSTEM
F	FEMALE
F1	FILTER 1
FOFS	FIBRE OPTIC FEEDTHROUGH SYSTEM
HC	HYDRAULIC COUPLER
HP	HIGH PRESSURE
HSC	HYDRAULIC STAB CONNECTOR
HSCR	HYDRAULIC STAB CONNECTOR RECEPTACLE
IWC	INTELLIGENT WELL COMPLETION
IWC1(C)	INTELLIGENT WELL COMPLETION CLOSE
IWC2(O)	INTELLIGENT WELL COMPLETION OPEN
LP	LOW PRESSURE
LVDT	LINEAR VARIABLE DISPLACEMENT TRANSFORMER
M	MALE
MIV	METHANOL INJECTION VALVE
MPFM	MULTI PHASE FLOW METER
MQC	MULTIPLE QUICK CONNECT
NV	NEEDLE VALVE
PCV(C)	PRODUCTION CHOKE VALVE CLOSE
PCV(O)	PRODUCTION CHOKE VALVE OPEN
PCVT	PRODUCTION CHOKE VALVE TEST
PMV	PRODUCTION MASTER VALVE
PSV	PRODUCTION SWAB VALVE
PT	PRESSURE TRANSMITTER
PWV	PRODUCTION WING VALVE
SAMS	SUBSEA ACOUSTIC MONITORING SYSTEM
SCM	SUBSEA CONTROL MODULE
SCMMB	SUBSEA CONTROL MODULE MOUNTING BASE
SCSSV	SURFACE CONTROLLED SUBSEA SAFETY VALVE
SLV	**SERVICE LINE VALVE**
SSC	**SLIDING SLEEVE CLOSE**
SSO	SLIDING SLEEVE OPEN
SV 1&2	SAMPLING VALVE 1&2
TT	TEMPERATURE TRANSMITTER
VGR	VX GASKET RELEASE
VX	REFERS TO TYPE OF GASKET
VXT	VX GASKET TEST
WTM	WALL THICKNESS MONITOR
XOV	CROSSOVER VALVE
XT	XMAS TREE

	LOWER RISER PACKAGE EMERGENCY DISCONNECT PACKAGE
ALP	ACCUMULATORS FOR (WOCM) LP
ALP DUMP	ACCUMULATORS FOR (WOCM) LP DUMP
APUL	ACCUMULATORS FOR PRIMARY UNLOCK
APUL DUMP	ACCUMULATORS FOR PRIMARY UNLOCK DUMP
AS	ACCUMULATOR SUPPLY
ASSR	ACCUMULATOR FOR SHEAR SEAL RAM
ASUL	ACCUMULATORS FOR SECONDARY UNLOCK
ASUL DUMP	ACCUMULATORS FOR SECONDARY UNLOCK DUMP
BV	BALL VALVE
CB	CENTRE BLOCK
CDV	CONTINGENCY DISCONNECT VALVE
CON	CONNECTOR
CV	CHECK VALVE
CVR	CHECK VALVE POPPET TYPE W/ RELIEF
EC	ELECTRICAL CONNECTOR
ECCL L	EDP CONNECTOR CUTTING LOOP LOCK
ECCL UL	EDP CONNECTOR CUTTING LOOP UNLOCK
EDP	EMERGENCY DISCONNECT PACKAGE
EL	EDP LOCK
ECST	EDP CONNECTOR SEAL TEST
ESUL	EDP SECONDARY UNLOCK
EUL	EDP UNLOCK
GF	GAS FILL
HC	HYDRAULIC CONNECTOR
HL	HOT LINE
HP	HIGH PRESSURE
HYD	HYDRAULIC
ISV	INJECTION SWAB VALVE
L	LOCK
L DUMP	LOCK DUMP
LAIV	LRP ANNULUS ISOLATION VALVE
LCCL	LRP CONNECTOR CUTTING LOOP
LMUL	LRP MECHANICAL UNLOCK
LMIV	LRP MEG INJECTION VALVE
LP	LOW PRESSURE
LPIV	LRP PRODUCTION ISOLATION VALVE
LRP	LOWER RISER PACKAGE
LCST	LRP CONNECTOR SEAL TEST
LSUL	LRP SECUNDARY UNLOCK
LUL	LRP UNLOCK
LXOV	LRP CROSSOVER VALVE
MAN	MANIFOLD BLOCK
MQC	MULTI QUICK CONNECTOR (ROV OPERATED)
MUL	MECHANICAL UNLOCK
N2	NITROGEN
NV	NEEDLE VALVE
O	OPEN
OR	OVERRIDE (MECHANICAL OVERRIDE UNLOCK)
P	PRIMARY
PL	PRIMARY LINE
PSV	PRODUCTION SWAB VALVE

	LOWER RISER PACKAGE EMERGENCY DISCONNECT PACKAGE
R	RETURN
RACV2	RISER ANNULUS CIRCULATION VALVE 2
RACV1	RISER ANNULUS CIRCULATION VALVE 1
RC	RETURN COMPENSATOR
RHS	ROV HOT STAB
ROV	REMOTELY OPERATED VEHICLE
RRV	RISER RETAINER VALVE
RS	ROV STAB
RSS	ROV STAB SELECTOR VALVE
S	SHUT
SCM	SUBSEA CONTROL MODULE
SEC	SECONDARY
SSR	SHEAR SEAL RAM
UL	UNLOCK
WOC	WORKOVER CONTROL
WOCM	WORKOVER CONTROL MODULE
XT	XMAS TREE

	SURFACE FLOW TREE
SPCIV	SURFACE PRODUCTION CHEMICAL INJECTION VALVE
SPKV	SURFACE PRODUCTION KILL VALVE
SPMV	SURFACE PRODUCTION MASTER VALVE
SPSV	SURFACE PRODUCTION SWAB VALVE
SPWV	SURFACE PRODUCTION WING VALVE
CVP	CHECK VALVE (PILOT OPERATED)
DBBV	DOUBLE BLOCK AND BLEED VALVE
NV	NEEDLE VALVE
BA	BLADDER ACCUMULATOR
3MV	3-WAY MANUAL VALVE

	ABBREVIATIONS
HPU	HYDRAULIC POWER UNIT
HSLV	HIGH SET LUBRICATION VALVE
MCP	MAIN CONTROL PANEL
MQC	MULTI QUICK CONNECTOR
WOCS	WORKOVER CONTROL SYSTEM

LEGEND:

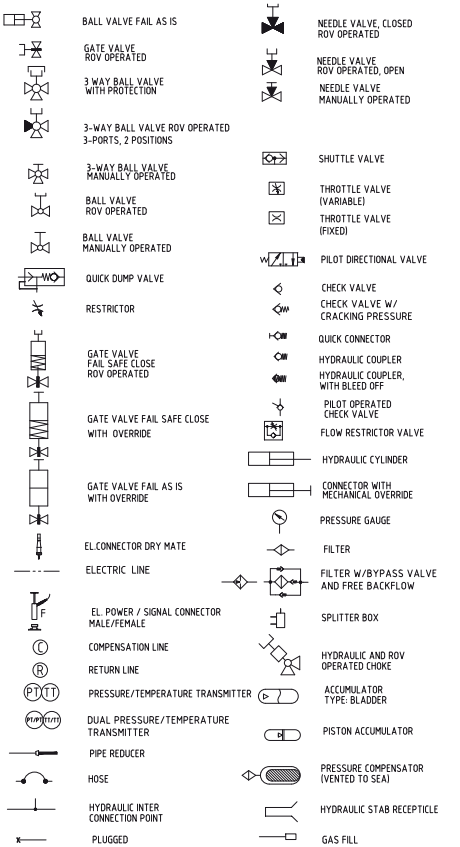

NAME OF LINE	P/N	OUTSIDE DIAMETER (OD = ID+(2×WT))	ID (mm)	WT (mm)	TUBE/PIPE DP (Bar) NOTE 1	MATERIAL
TUBE TYPE 01	P6000007729	3/8" OD HYDRAULIC HP LINE (9.53mm)	5.31	2.11	1035	INCONEL 625
TUBE TYPE 02	P6000007725	3/8" OD HYDRAULIC HP LINE (9.53mm)	6.23	1.65	690	INCONEL 625
TUBE TYPE 03	P6000007722	3/8" OD HYDRAULIC LP LINE (9.53mm)	6.23	1.65	345	316/316L SS
TUBE TYPE 16	200001330	1/2" OD HYDRAULIC LP LINE (12.70mm)	9.4	1.65	228	316/316L SS
TUBE TYPE 17	P6000011788	9/16" OD HYDRAULIC HP LINE (14.29mm)	7.93	3.18	1035	BUTECH MP 316SS
TUBE TYPE 18	P6000007724	3/4" OD HYDRAULIC LP LINE (19.05mm)	13.5		345	316/316L SS
TUBE TYPE 22	P6000085469	1" OD HYDRAULIC HP LINE		3.96	690	INCONEL 625

NOTE:

1. SEE OPERATING PRESSURE FOR EACH LINE IN DESIGN SPEC. FOR ACTUAL PRODUCT.

DA600041534 / AO-045-SX-2000-120079

EDP, LRP and Xmas Tree Schematic with legend

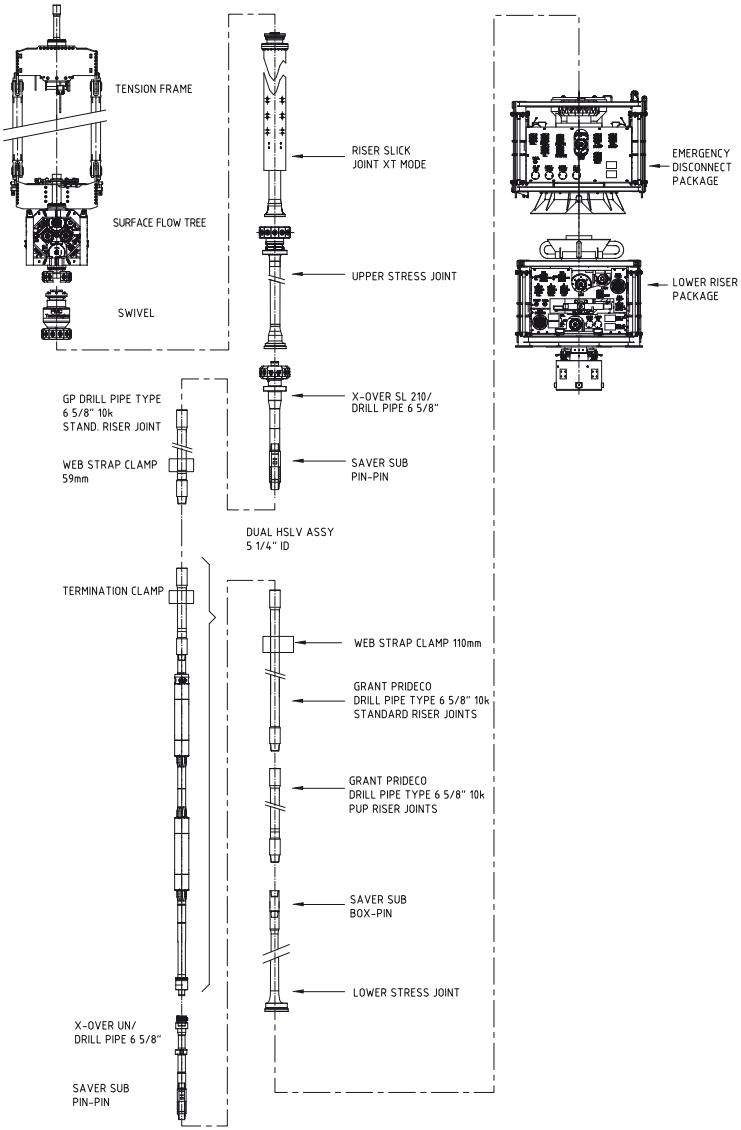

WOR Arrangement from Tension Frame to LRP in XT mode

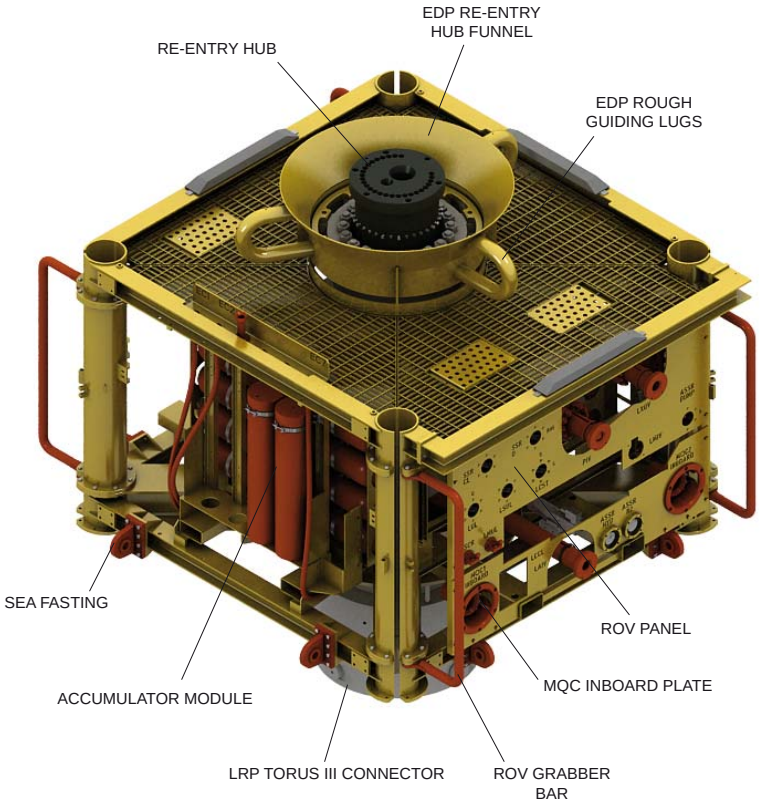

Lower Riser Package

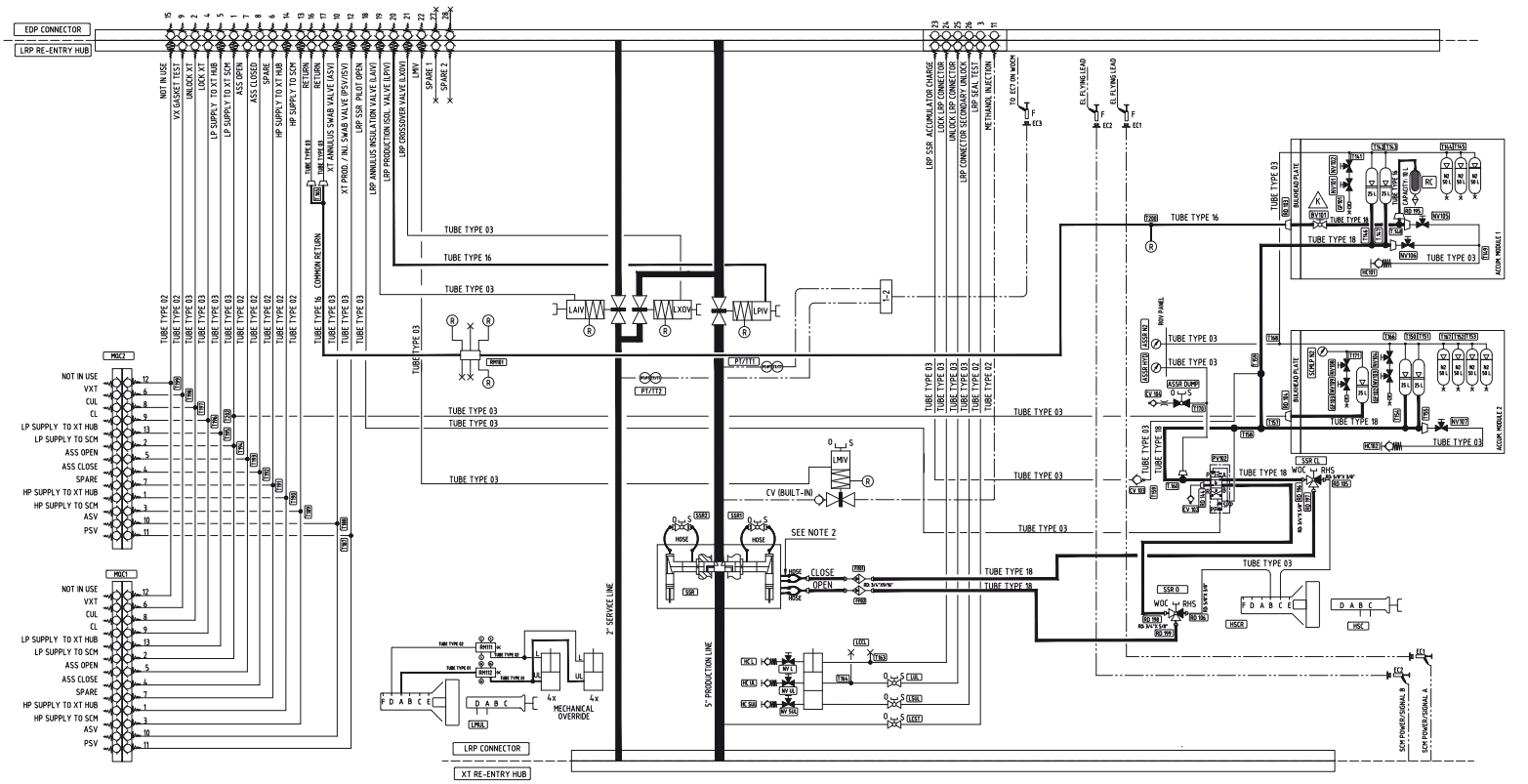

DA600061715 / AO-045-SX-2000-120653

Lower Riser Package schematic

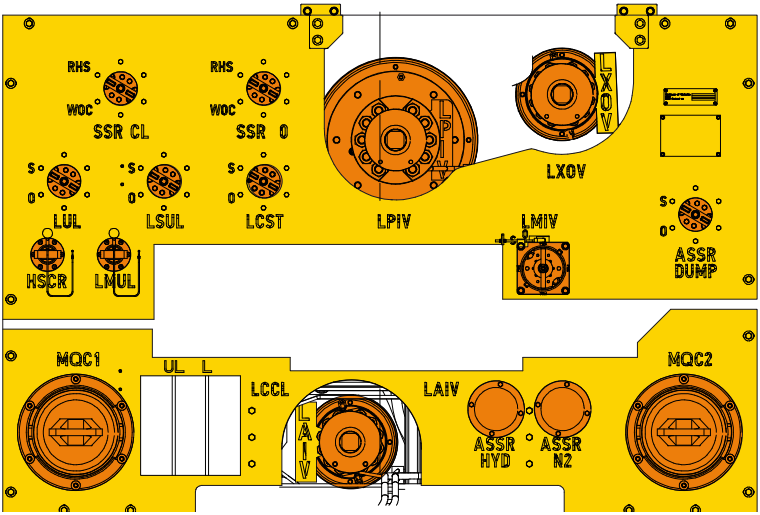

Label	Valve Type	Valve size	ROV Interface	Crack Open Load (N)	Crack Open Pressure Via LAOT (bar)	Hold Open Load (N)	Hold Open Pressure via LAOT (psi)
LPIV	Hydraulic Linear Actuator	5 1/8"	ISO13628-8 Linear Push Type B	165 100 N (0 bar Bore Pressure)	38 bar (0 bar Bore Pressure)	184 405 N (0 bar Bore Pressure)	43 bar (0 bar Bore Pressure)
				490 328 N (690 bar Diff Pressure)	113 bar (690 bar Diff Pressure)	322 114 N (690 bar Diff pressure)	75 bar (690 bar Diff Pressure)
LAIV LXOV	Hydraulic Linear Actuator	2 1/16"	ISO13628- 8 Linear Push Type B	47 378 N (0 bar Bore Pressure)	11 bar (0 bar Bore-Pressure)	43 023 N (0 bar Bore-Pressure)	10 bar (0 bar Bore-Pressure)
				147 632 N (690 bar Diff Pressure)	34 bar (690 bar Diff Pressure)	107 674 N (690 bar Diff Pressure)	25 bar (690 bar Diff Pressure)

Label	Valve Type	Valve size	ROV Interface	Direction to Close	No. of Turns	Torque	
LMIV	Gate Valve Bentley	1"	ISO13628-8 Type B w/ TBar Handle	CW	10.5 ±0.5	95 - 122 Nm	339 Nm
LCST SSR 1 SSR 2 LUL LSUL	2-way Ball	3/8"	ISO13628-8 Class 4	2 pos	90º	10 Nm	100 Nm
SSR CL SSR O	3-way Ball	3/8"	ISO13628-8 Class 4	2 pos	90º	10 Nm	50 Nm
ASSR	DUMP 2-way Ball	3/8"	ISO13628-8 Class 4	2 pos	90º	10 Nm	100 Nm

Lower Riser Package ROV Panel

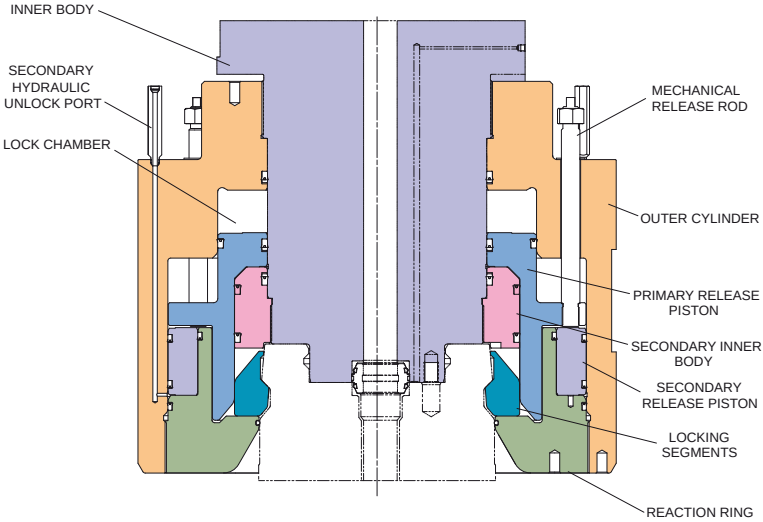

LRP Torus III Connector

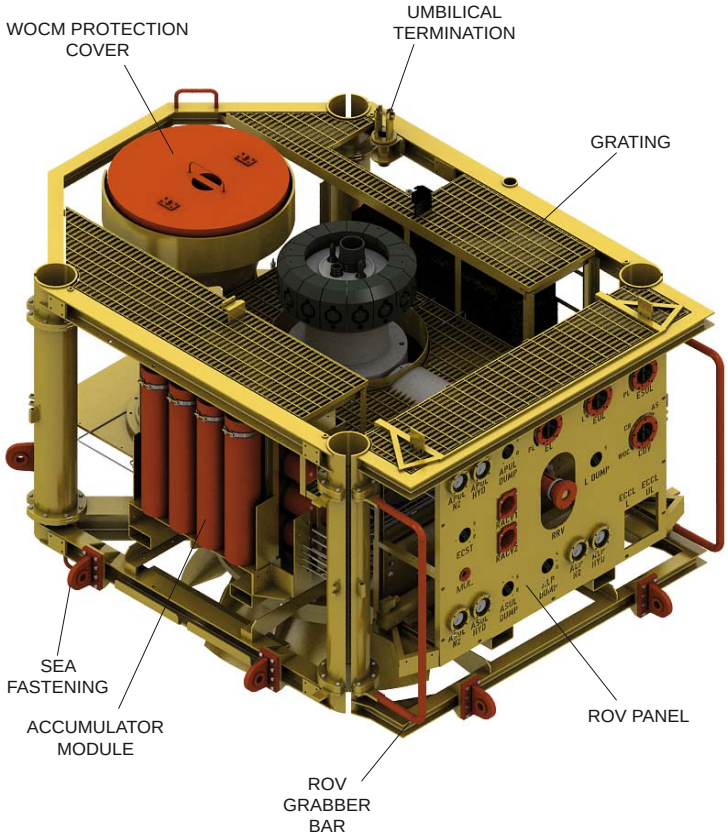

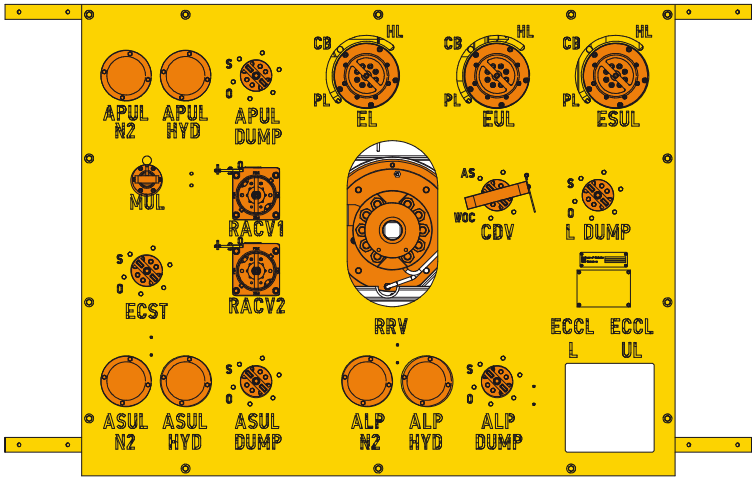

Label	Valve Type	Valve Size	ROV Interface	Crack Open Load (N)	Crack Open Pressure via LAOT (bar)	Hold Open Load (N)	Hold Open Pressure via LAOT (psi)
RRV	Hydraulic Linear Actuator	5 1/8"	ISO13628-8 Linear Push Type B	165 100 N (0 bar Bore Pressure)	38 bar (0 bar Bore Pressure)	184 405 (0 bar Bore Pressure)	43 bar (0 bar Bore Pressure)
				490 328 N (690 bar Diff Pressure)	113 bar (690 bar Diff Pressure)	322 114 N (690 bar Diff pressure)	75 bar (690 bar Diff Pressure)
RACV1	Gate Valve Bentley	1"	ISO13628-8 Type B w/ T-Bar Handle	10.5 ±0.5	CW	95 - 122 Nm 339	339 Nm
RACV2	Gate Valve Bentley	1"	ISO13628-8 Type B w/ T-Bar Handle	10.5 ±0.5	CW	95 - 122 Nm 339	339 Nm
CDV	3 Way Ball	3/8"	ISO13628-8 Class 4	90º	2 pos	10 Nm	50 Nm
ECST	2 Way Ball	3/8"	ISO13628-8 Class 4	90º	2 pos	10 Nm	50 Nm
EL	3 Way Ball	3/8"	ISO13628-8 Class 4	90º + 90º	3 pos	10 Nm	100 Nm
EUL	3 Way Ball	3/8"	ISO13628-8 Class 4	90º + 90º	3 pos	10 Nm	100 Nm
ESUL	3 Way Ball	3/8"	ISO13628-8 Class 4	90º + 90º	3 pos	10 Nm	100 Nm
APUL DUMP	2 Way Ball	3/8"	ISO13628-8 Class 4	90º	2 pos	10 Nm	50 Nm
ASUL DUMP	2 Way Ball	3/8"	ISO13628-8 Class 4	90º	2 pos	10 Nm	50 Nm
ALP DUMP	2 Way Ball	3/8"	ISO13628-8 Class 4	90º	2 pos	10 Nm	50 Nm

Emergency Disconnect Package

Emergency Disconnect Package ROV Panel

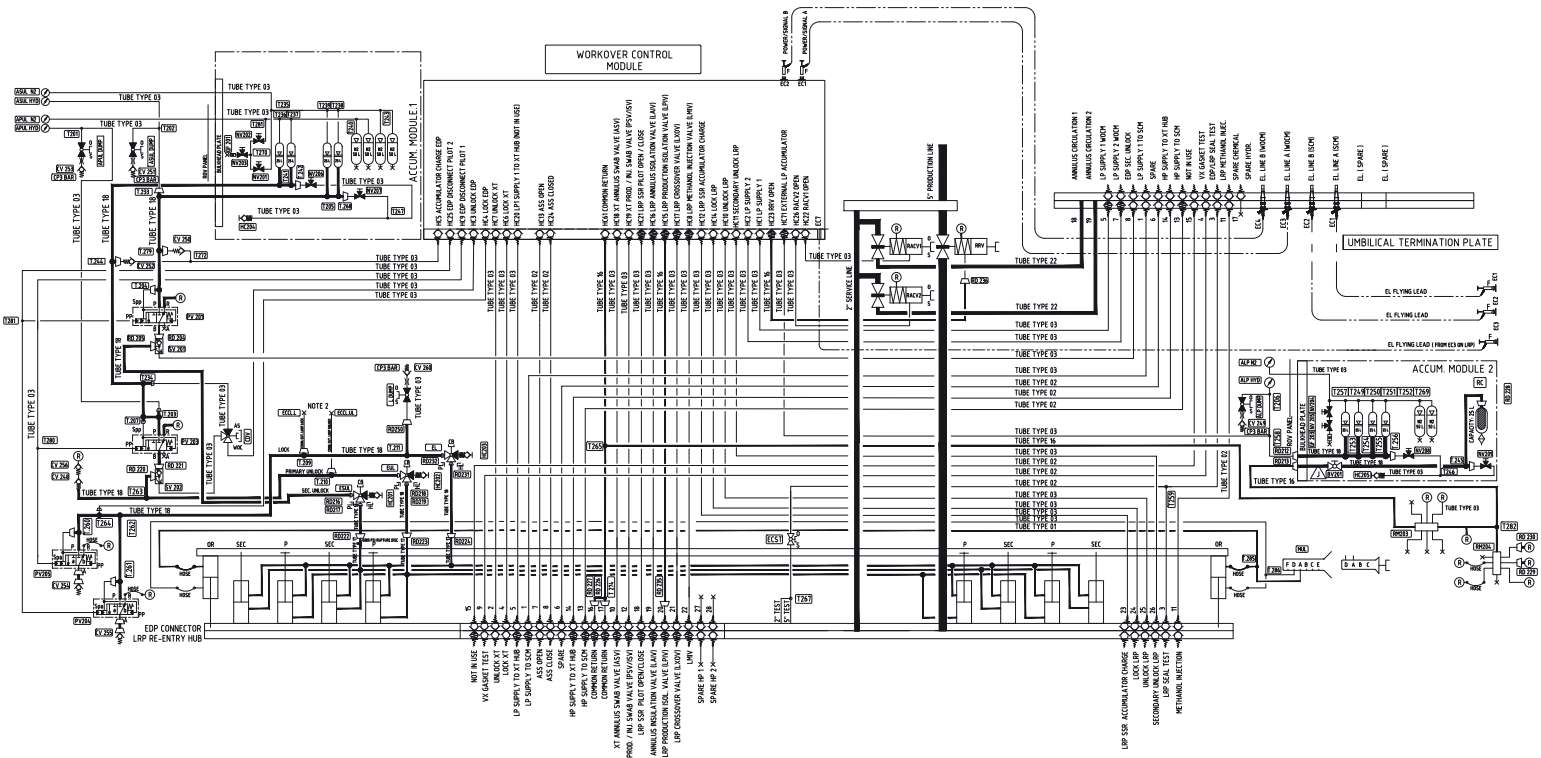

DA600061716 / AO-045-SX-2000-120654

Emergency Disconnect Package schematic

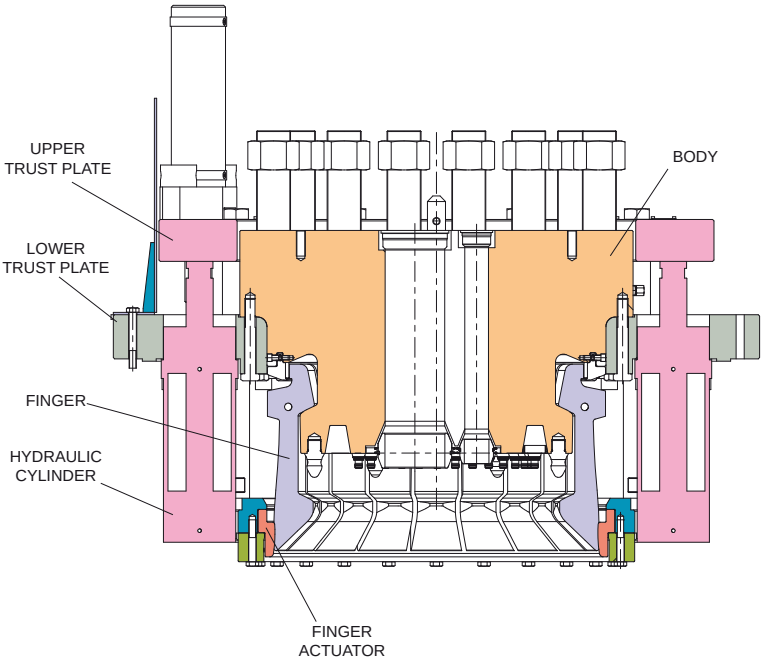

EDP KC 6-17 Connector

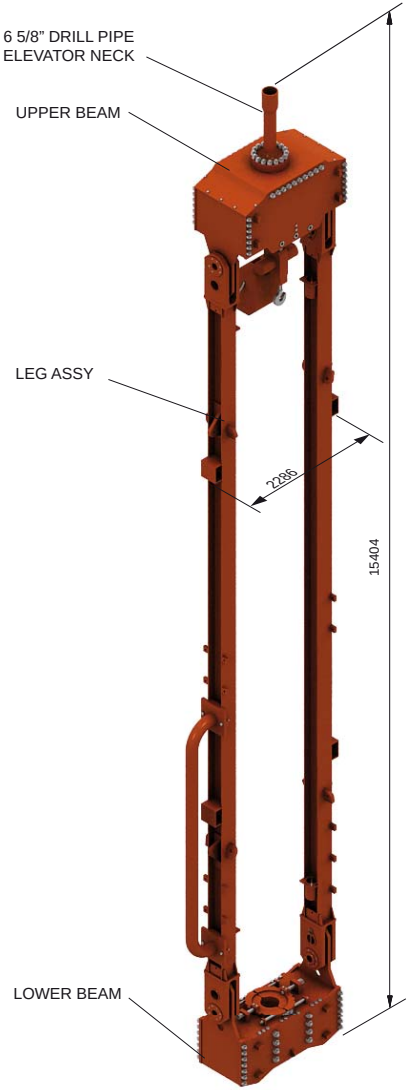

Tension Frame

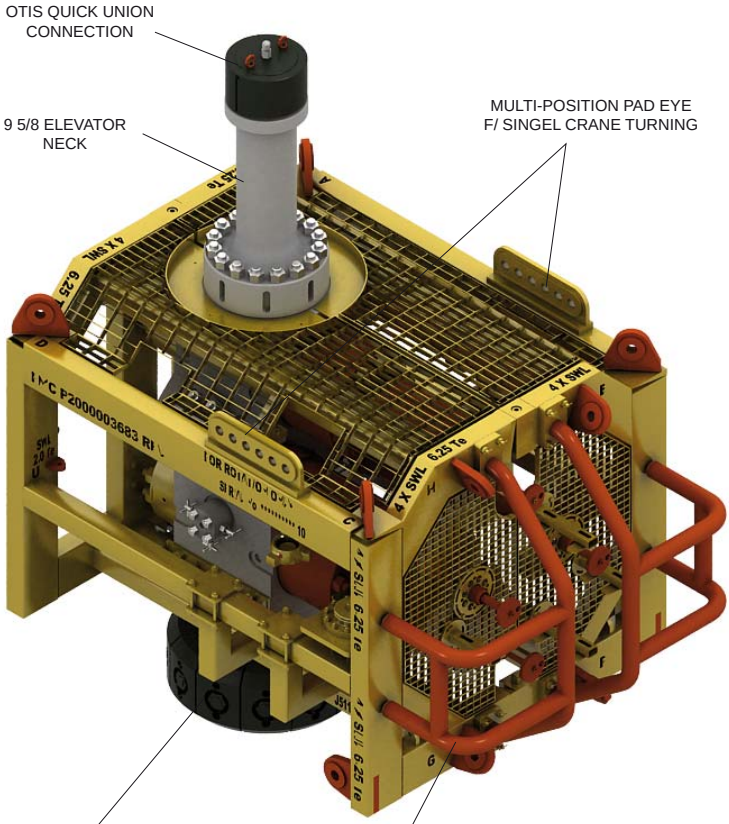

Surface Flow Tree

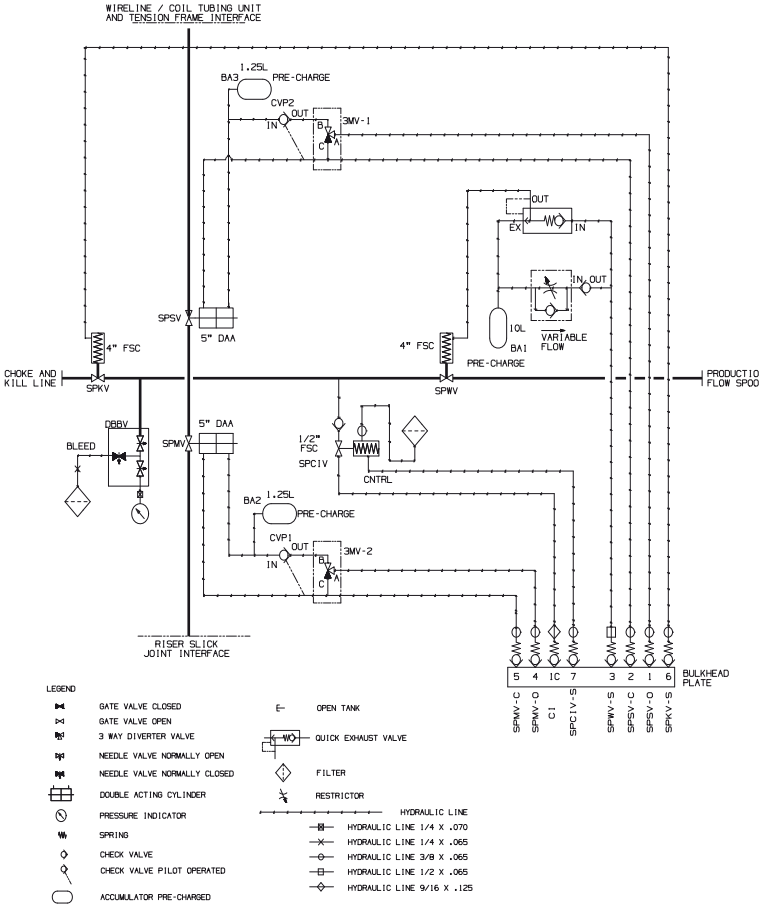

DU200051976 / AO-045-SX-2000-121550

Surface Flow Tree Schematic

HANG OFF BUSHING
f/ UN WG

HANG OFF BUSHING
f/ UN DS-1

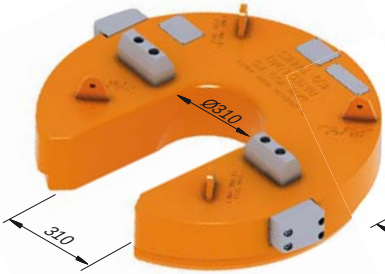

HANG OFF BUSHING
f/ SPEEDLOCK WG

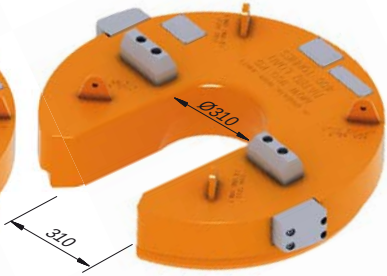

HANG OFF BUSHING
f/ SPEEDLOCK DS-1

Hang off bushing XT mode

NOTES

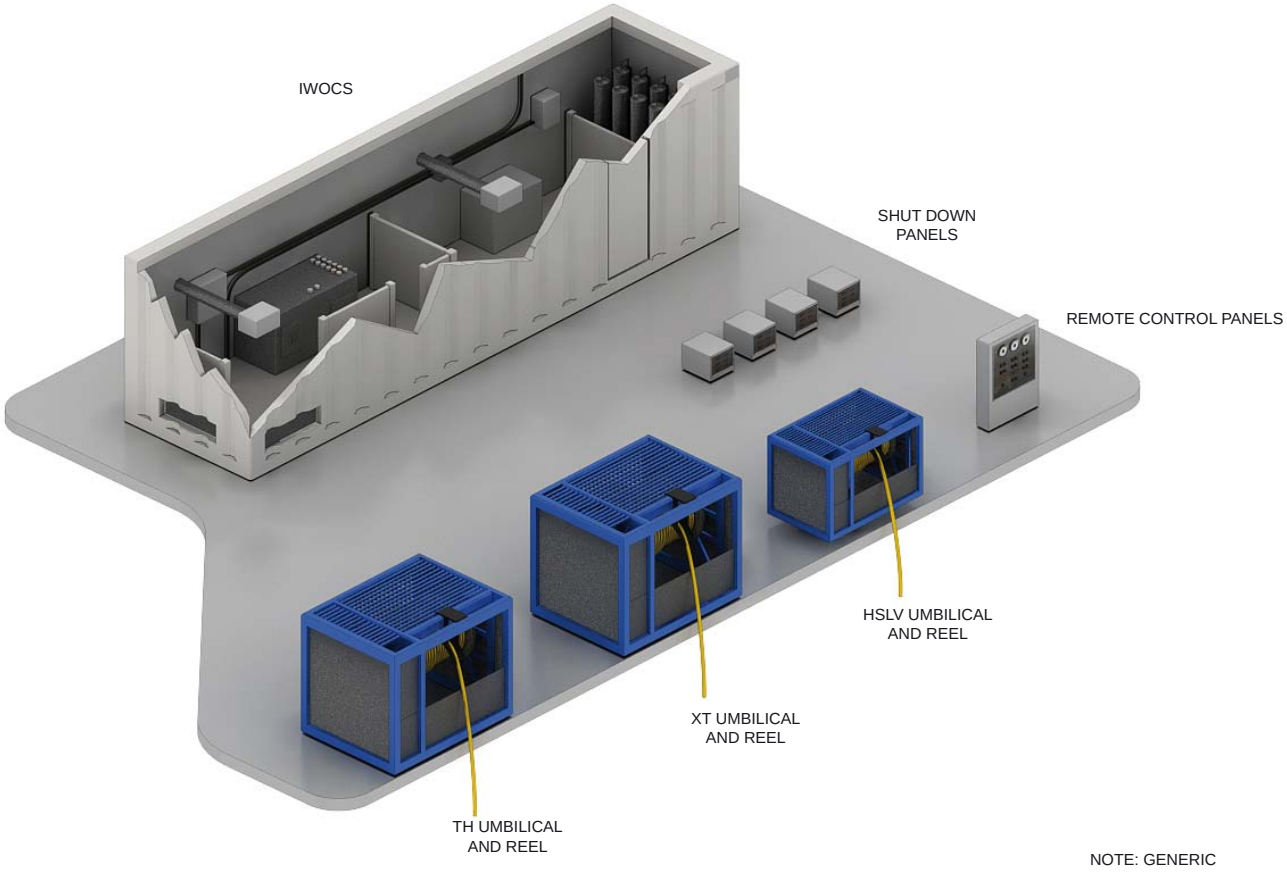

EH WOCS system

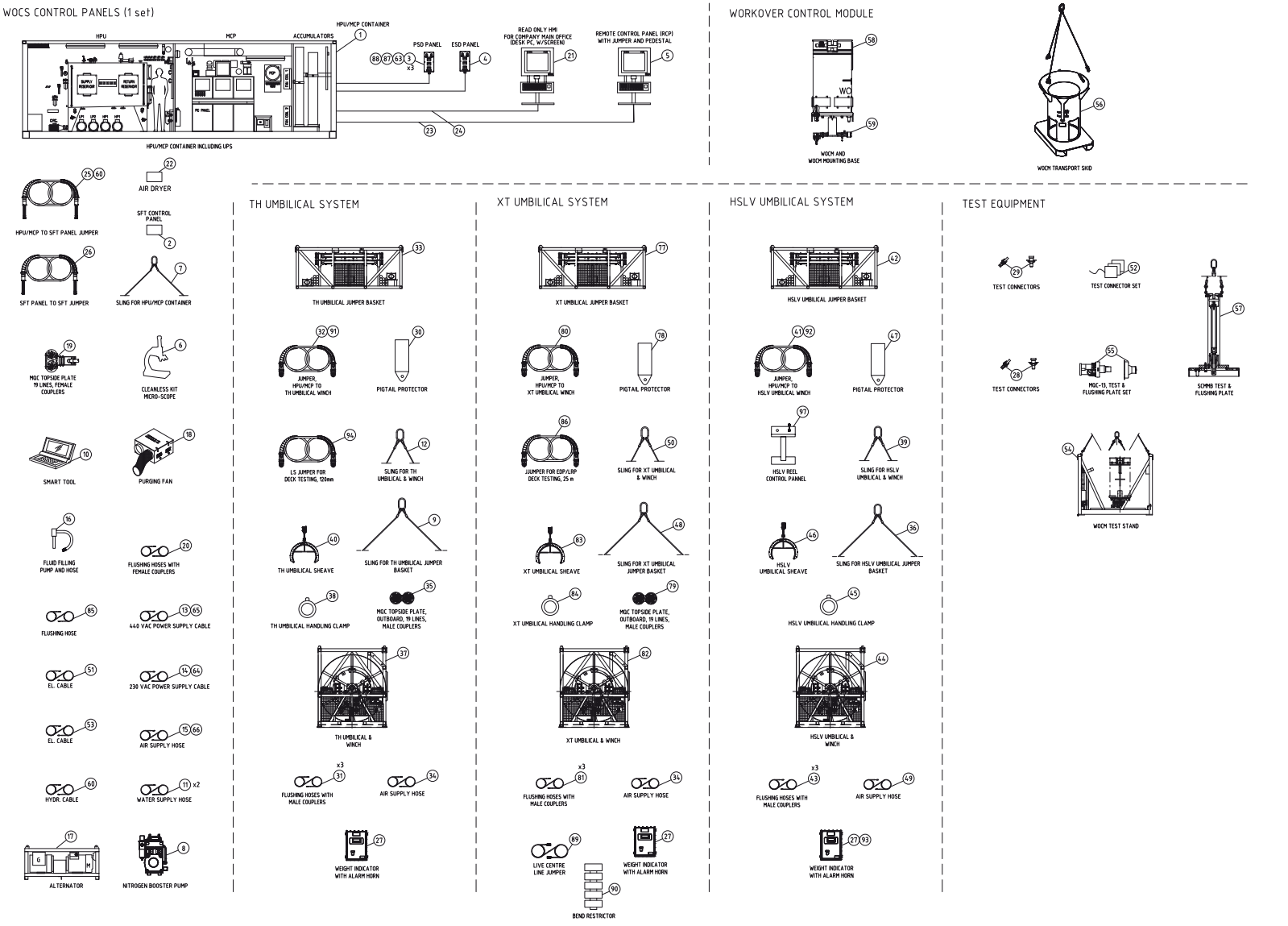

WOCS Scope of Supply

SUBSEA JUMPER SYSTEM (1 off COMPLETE SYSTEMS FOR EACH MODE)

TH MODE

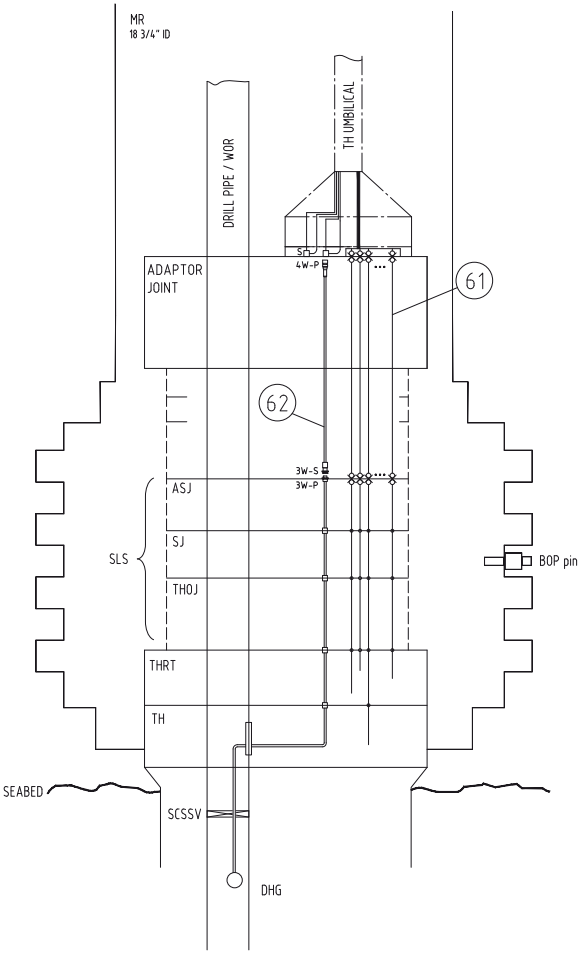

XT MODE (OPEN SEA)

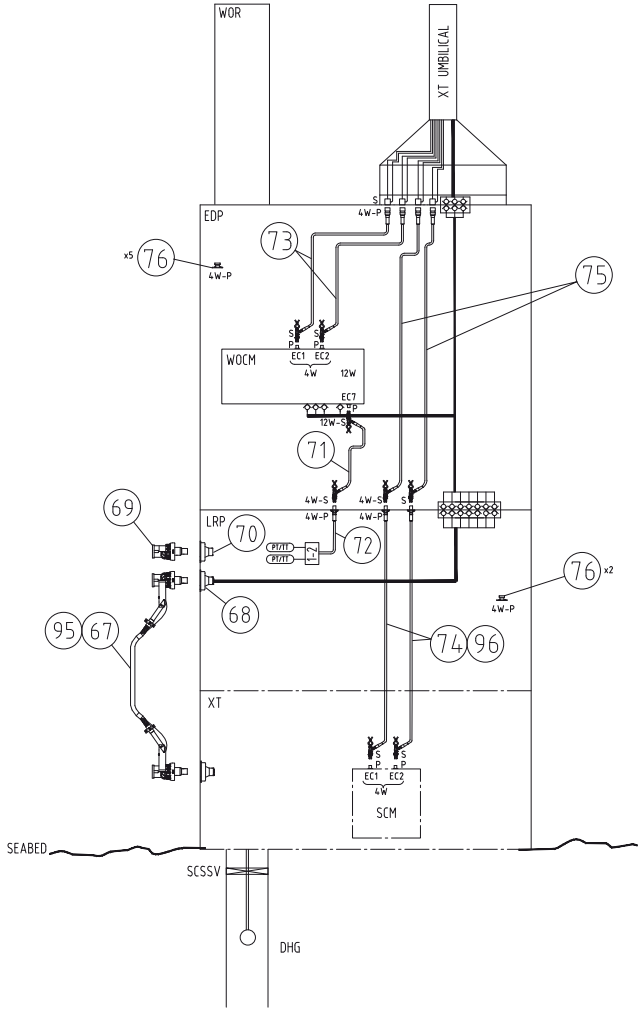

WOCS Scope of Supply

ITEM	NAME, TYPE DIMENSION	PART NO.
1	HPU, MCP CONTAINER	P6000068327
2	SFT CONTROL PANEL	P6000068334
3	SHUT DOWN PANEL (PSD) WITH 75 m CABLE	P6000068324
4	ESD/EQD PANEL WITH 200 m CABLE	P6000068325
5	REMOTE CONTROL PANEL (rcp) WITH JUMPER AND PEDESTAL	P6000068322
6	CLEANLESS KIT (MICROSCOPIC INSPECTION DEVICE)	P6000068342
7	LIFTING SLING FOR HPU/MCP CONTAINER	P6000068328
8	NITROGEN BOOSTER PUMP	P6000068330
9	SLINF FOR TH UMBILICAL JUMPER BASKET	P6000070851
10	SMART TOOL 20 (2 off RACK BASEED & 1 LAPTOP)	P6000030152
11	WATER SUPPLY HOSE, 30 m	P6000068341
12	SLING FOR TH UMBILICAL AND WINCH	P6000070852
13	SUPPLY CABLE 440 VAC, 50 m	P6000068338
14	SUPPLY CABLE 230 VAC, 50 m	P6000068337
15	AIR SUPPLY HOSE, 30 m	P6000068339
16	FILLING PUMP AND HOSE FOR CONTROL FLUID	P6000068340
17	ALTERNATOR, 440/230 VAC WITH LIFTING SLING	P6000068331, P6000068332
18	PURING FAN WITH 30 m DUCTING AND LIFTING SLING	P6000068326, P6000076068
19	MQC TOPSIDE, 19 LINES, FLUSHING PLATE, FEMALE COUPLERS	7300062
20	FLUSHING HOSES WITH FEMALE COUPLERS	-
21	READ ONLY HMI DESK PC W/SCREEN	P6000072818
22	AIR DRYER UNIT (SAFE AREA)	P6000068344
23	RCP JUMPER 75 m	P6000068323
24	READ ONLY HMI JUMPER 100 m	P6000068343
25	HPU, MCP TO SFT PANEL JUMPER, 75 m	P6000068333
26	SFT PANEL TO SFT JUMPER 30 m	P6000068336
27	WEIGHT INDICATOR WITH ALARM HORN	P6000056960
28	TEST CONNECTOR KIT, XT UMB	P6000071651
29	TEST CONNECTOR KIT, TH UMB	P6000072513
30	PIGTAIL PROTECTOR TH UMB	P6000072512
31	FLUSHING HOSES (3 m) WITH MALE COUPLERS FOR TH UMBILICAL	P6000068335
32	JUMPER 25 m, HPU MCP CONTAINER - TH UMBILICAL WINCH	P6000070858
33	TH UMBILICAL JUMPER BASKET	P6000070856
34	AIR SUPPLY HOSE, 30 m	P6000070850
35	MQC TOPSIDE, 19 LINES, FLUSHING PLATE, MALE COUPLERS	7300061
36	SLING FOR HSLV UMBILICAL JUMPER BASKET	P6000071661
37	TH UMBILICAL AND WINCH , 1650 m	P6000070859
38	TH UMBILICAL HANDLING CLAMP	P6000070853
39	SLING FOR HSLV UMBILICAL AND WINCH	P6000071660
40	SHEAVE FOR TH UMBILICAL	P6000070857
41	HSLV JUMPER 25 mk, HPU/MCP CONTAINER - HSLV UMBILICAL WINCH	P6000071654
42	HSLV IMBILICAL JUMPER BASKET	P6000071656
43	FLUSHING HOSE (3 m) WITH MALE COUPLERS, FOR HSLV UMBILICAL	P6000068335
44	HSLV UMBILICAL AND WINCH, 200 m	P6000071653
45	HSLV UMBILICAL HANDLING CLAMP	P6000071659
46	SHEAVE FOR HSLV UMBILICAL	P6000071655
47	PIGTAIL PROTECTOR, HSLV UMBILICAL	P6000072511
48	SLING FOR XT UMBILICAL JUMPER BASKET	P6000071556
49	AIR SUPPLY HOSE, 1 INCH, 50 m	P6000072510

ITEM	NAME, TYPE DIMENSION	PART NO.
50	SLING FOR XT UMBILICAL AND WINCH	P6000070848
51	EL. CABLE HPU/MCP TO PLATFORM UTILITIES, 200 m	P6000085044
52	TEST CONNECTOR SET	P6000071651
53	EL. CABLE HPU/MCP TO RCP, 120 m	P6000073362
54	WOCM TEST STAND	P6000068776
55	MQC-13, SUBSEA, TEST & FLUSHING PLATE SET (INBOARD & OUTBOARD)	700009270/71
56	WOCM TRANSPORT SKID	100048881
57	WOCMMB TEST AND FLUSHING PLATE	P6000068754
58	WORK OVER CONTROL MODULE (WOCM)	P6000068770
59	WOCM MOUNTING BASE (PART OF EDP)	P6000068847
60	HYDR JUMPER HPU/MCP TO SFT PANEL, 120 m	P6000083365
61	HYDRAULIC JUMPER, 3/16", 13 m, 2X BuTech GLANDS 20G6, SLS	TBD
62	EL. JUMPER, 1-1, 13 m, 4W-P DVR / 3W - S DGO'BRIEN, SLS	P6000068843
63	SHUT DOWN PANEL PSD WITH 200 m CABLE	P6000083358
64	CABLE 230 VAC POWER SUPPLY, 75 m	P6000083361
65	CABLE 440 VAC POWER SUPPLY, 75 m	P6000083360
66	AIR SUPPLY HOSE, 50 m	P6000083359
67	HYDRAULIC JUMPER, 1-1, 8 m, MQC - 13 BOTH ENDS, 2HP/7LP, LRP - TX	P6000068847
68	MQC - 13, INBOARD, 9/13 (PART OF LRP)	P6000068849
69	MQC, INBOARD, LTPC (PLASTIC), FOR ITEM 68	100017910
70	PARKING, FOR ITEM 67 (PART OF LRP)	P6000068854
71	EL. JUMPER, 1-1, 7 m, 12W-P ROV / 1212W-P STAB, WOCM - LRP	P6000068840
72	EL. JUMPER, 1-2, 4/3/3m, 12W - P FL. FLANGE / 2xPTTT	P6000068839
73	EL. JUMPER, 1-1, 10 m, 4W-P DVR / 4x4W - S ROV, EDP - WOCM/LRP	P6000013539
74	EL. JUMPER, 1-1, 3.5 m, ROV, 4W-FL.FLANGE / 4W-S ROV, LRP - SCM	P6000068841, P6000068842
75	EL. JUMPER, 1-1, 10 m, ROV, 4W-P FL.FLANGE / 4W-S ROV, LRP	-
76	PARKING, 4W-P, FOR ITEM 73 + 74	200017684
77	XT UMBILICAL JUMPER BASKET	P6000068348
78	PIGTAIL PROTECTOR, XT UMBILICAL	P6000070849
79	MQC TOPSIDE, 19 LINES, FLUSHING PLATE, MALE COUPLERS	7300061
80	JUMPER 75 m, HPU/MCP CONTAINER - ZT UMBILICAL WINCH	P6000068321
81	FLUSHING HOSES(3 m) WITH MALE COUPLERS FOR ZT UMBILICAL	P6000068335
82	XT UMBILICAL AND WINCH, 1650 m	P6000068347
83	SHEAVE FOR XT UMBILICAL	P6000068320
84	CT UMBILICAL HANDLING CLAMP	P6000070847
85	FLUSHING HOSE FOR HLSV OUTLETS	P6000072856
86	JUMPER FOR EDP/LRP DECK TESTING, 25 m	P6000072856
87	SHUTDOWN PANEL PSD WITH 100 m CABLE	P6000100114
88	SHUTDOWN PANEL PSD WITH 120 m CABLE	P6000083356
89	LIVE CENTRE LINJE JUMPER (75 m) FOR XT UMBILICAL WINCH	P6000083357
90	VERTEBRAE BEND RESTRICTOR	P6000072509
91	TH REEL - HPU/MCP JUMPER, 120 m	P6000082310
92	HSLV REEL - HPU/MCP JUMPER, 120 m	P6000082311
93	WEIGHT INDICATOR	P6000077481
94	LS UMBILICAL JUMPER FOR DECK TESTING, 120 m	P6000077480
95	HYDRAULIC FLYNG LEAD, MQC-14 MK II	P6000101342
96	ELECTRICAL JUMPER, 1-1 LEGS	P6000101329
97	HSLV REEL CONTROL PANEL	P6000077313

WOCS Scope of Supply

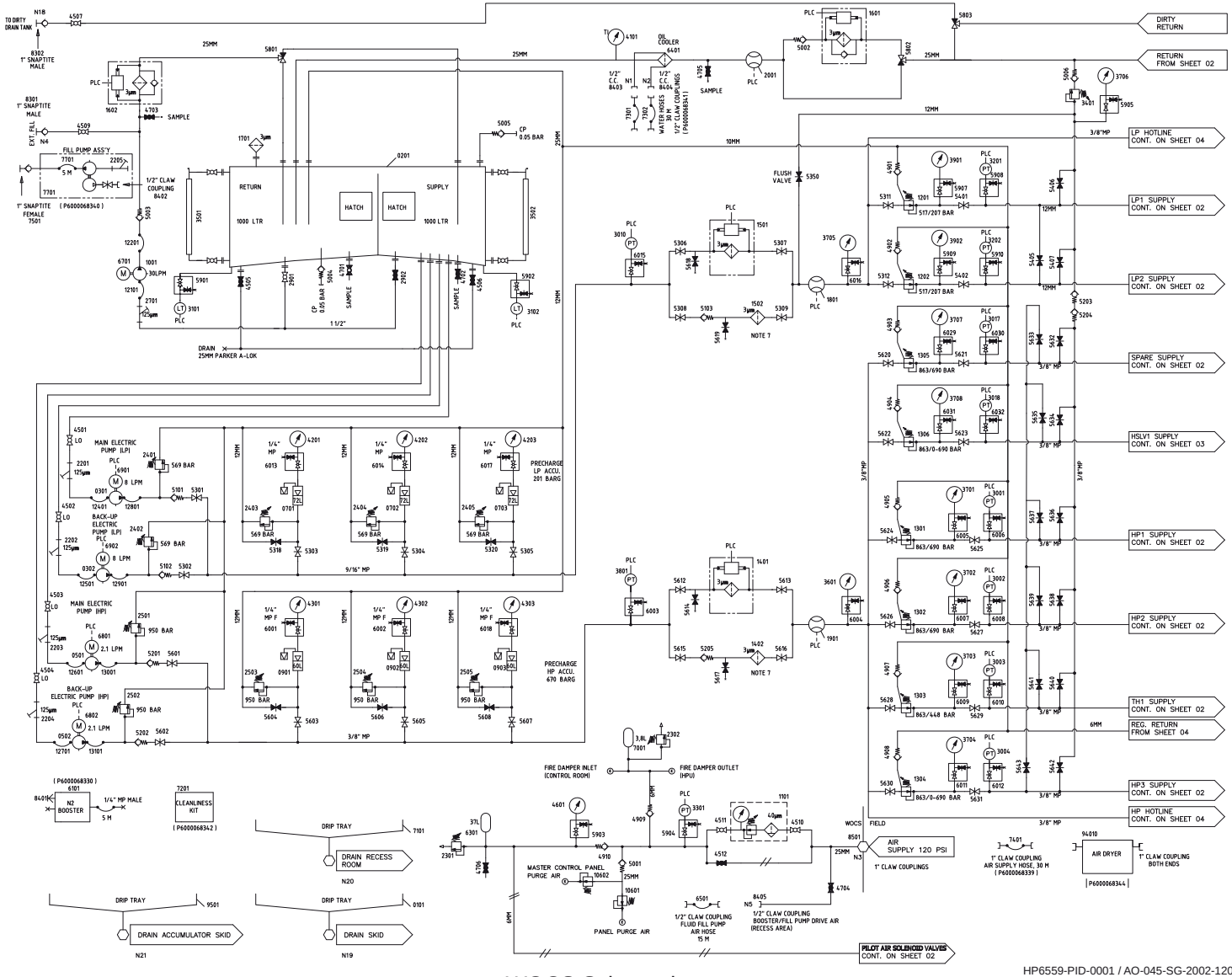

HP6559-PID-0001 / AO-045-SG-2002-120496

WOCS Schematic

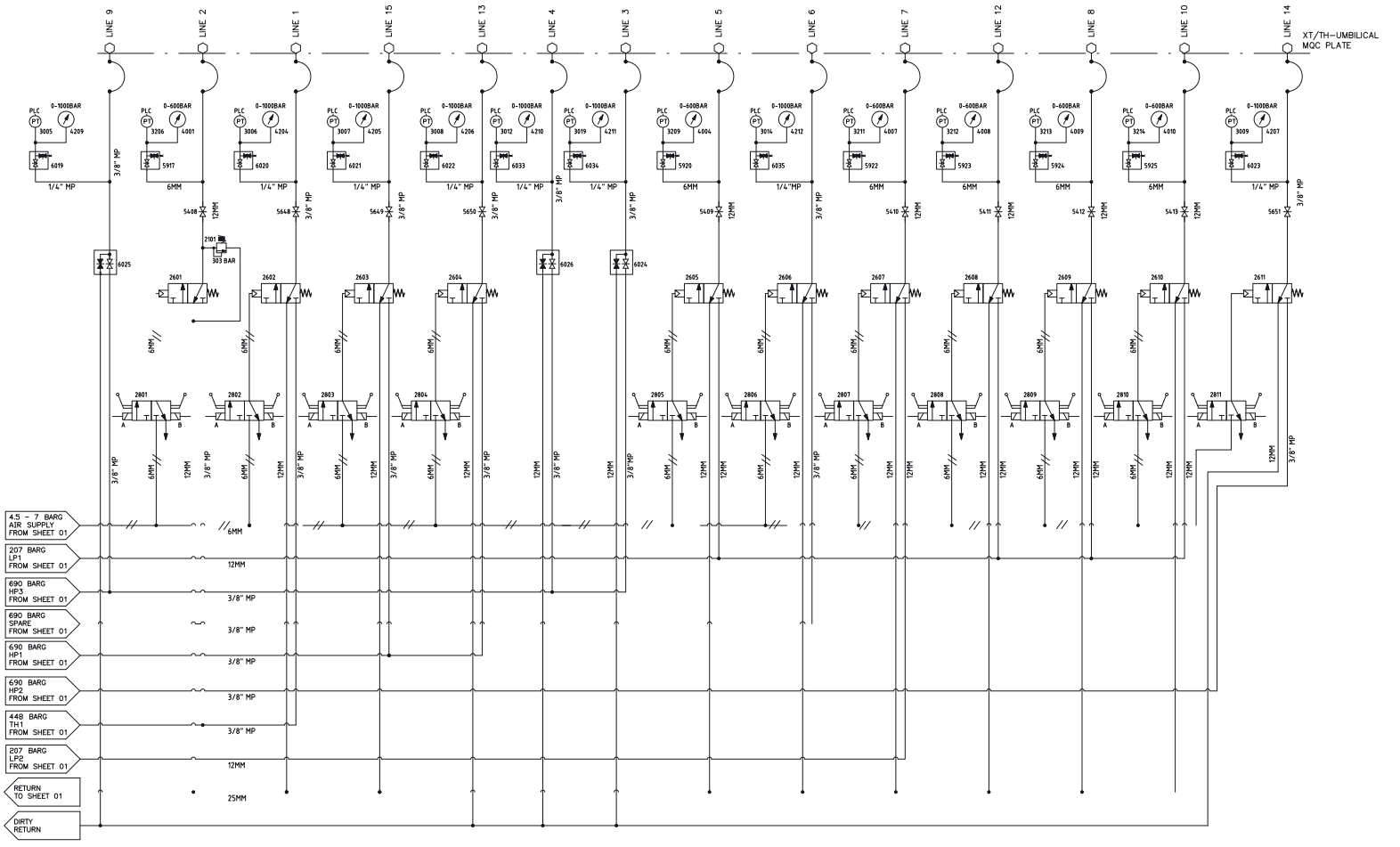

HP6559-PID-0001 / AO-045-SG-2002-120496

WOCS Schematic

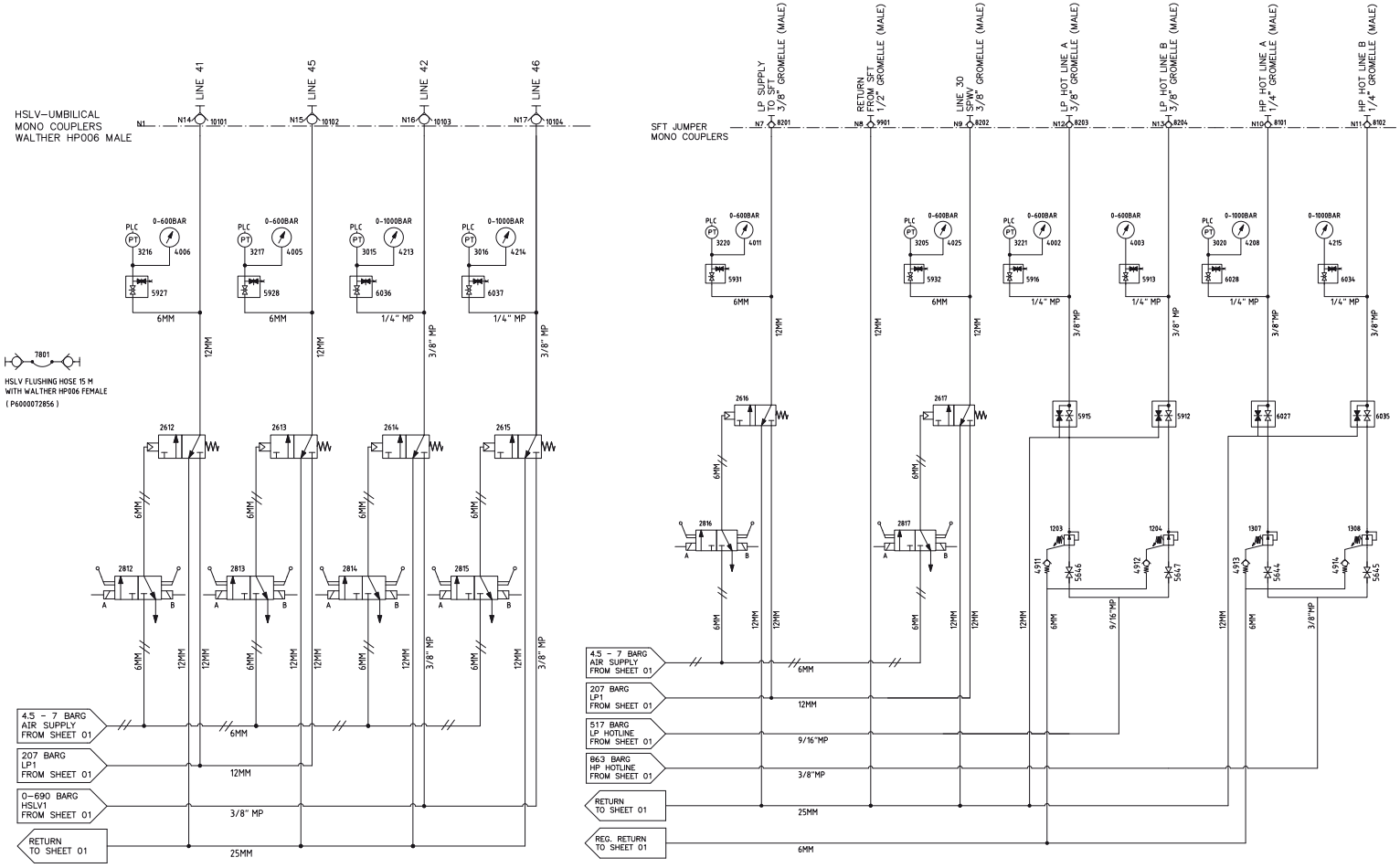

HP6559-PID-0001 / AO-045-SG-2002-120496

WOCS Schematic

NOTES

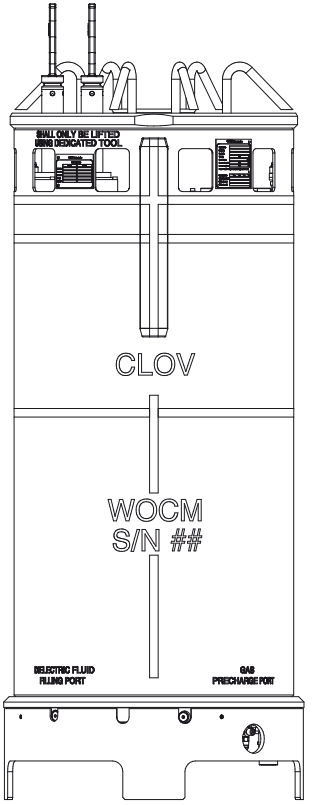
SHALL ONLY BE LIFTED
USING DEDICATED TOOL
CLOV
WOCM
S/N ##
DIELECTRIC FLUID
FILLING PORT
GAS
PRECHARGE PORT

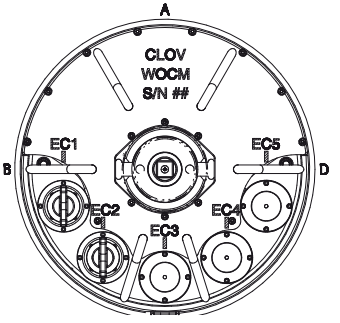
A
CLOV
WOCM
S/N ##
EC1
EC5
B
D
EC2
EC4
EC3

WOCM

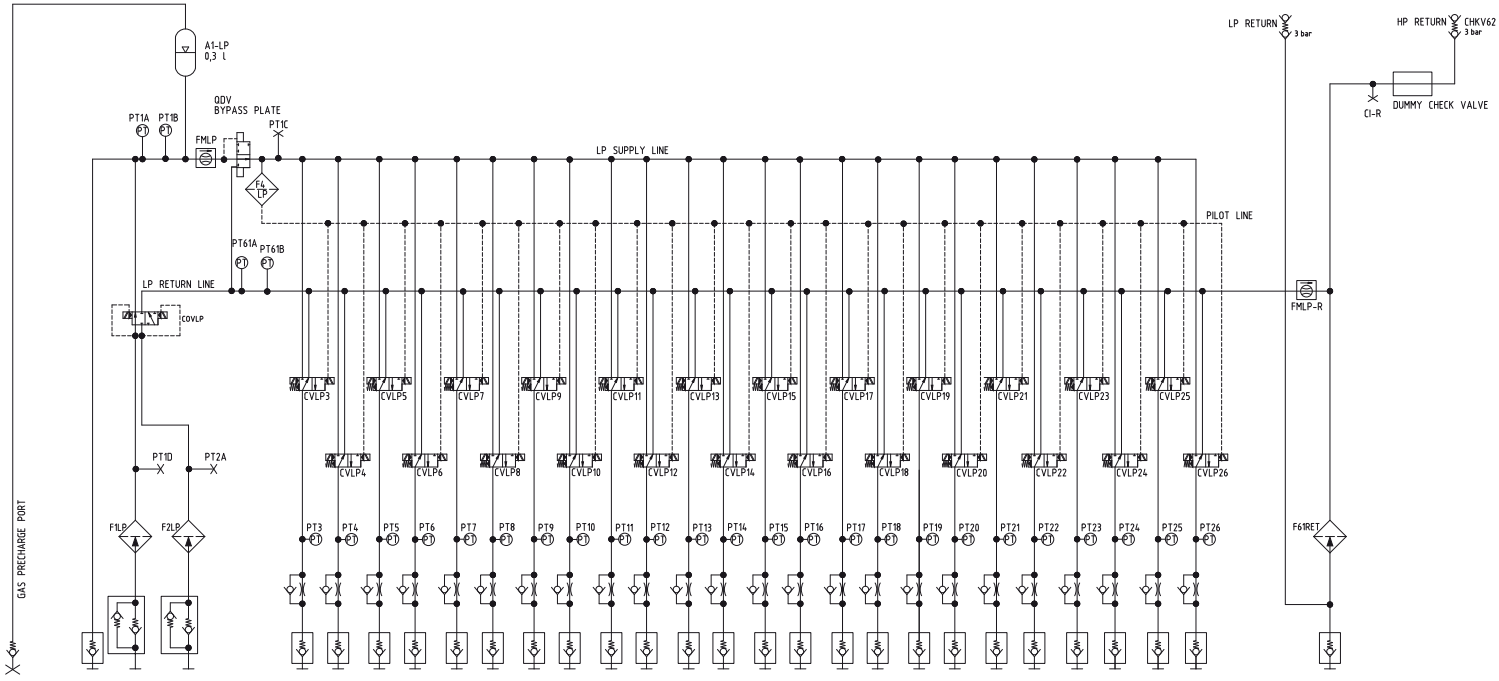

HYDR. LINES	HC71	HC1	HC2		HC3	HC4	HC5	HC6	HC7	HC8	HC9	HC10	HC11	HC12	HC13	HC14	HC15	HC16	HC17	HC18	HC19	HC20	HC21	HC22	HC23	HC24	HC25	HC26		HC61
W.P. (BAR):	207	207	207		207	207	207	207	207	207	207	207	207	207	207	207	207	207	207	207	207	207	207	207	207	207	207	207		40
FLOW RESTRICTOR (mm):					2 mm	2 mm	2 mm	2 mm	2 mm	2 mm	2 mm	2 mm	2 mm	2 mm	2 mm	2 mm	2 mm	2 mm	2 mm	2 mm	2 mm	2 mm	2 mm	2 mm	2 mm	2 mm	2 mm	2 mm		
FUNCTION:	EXT. LP ACCUMULATOR	LP 1 LP SUPPLY 1	LP 2 LP SUPPLY 2		UNLOCK EDP	LOCK EDP	ACC. CHARGE EDP	LOCK XT	UNLOCK XT	LMIV	EDP DISCONNECT PILOT 1	UNLOCK LRP	SECONDARY UNLOCK LRP	LRP SSR ACC. CHARGE	ANNULUS SS OPEN	LOCK LRP	LPIV	LAIV	LXOV	XT ASV	XT PSV/ISV	LP SUPPLY TO XT HUB	LRP SSR PILOT	RACV1 OPEN	RRV OPEN	ANNULUS SS CLOSE	EDP DISCONNECT PILOT	RACV2 OPEN		RETURN (COMMON RETURN)

DA600041977 / AO-045-SX-2000-120312

WOCM Hydraulic schematic

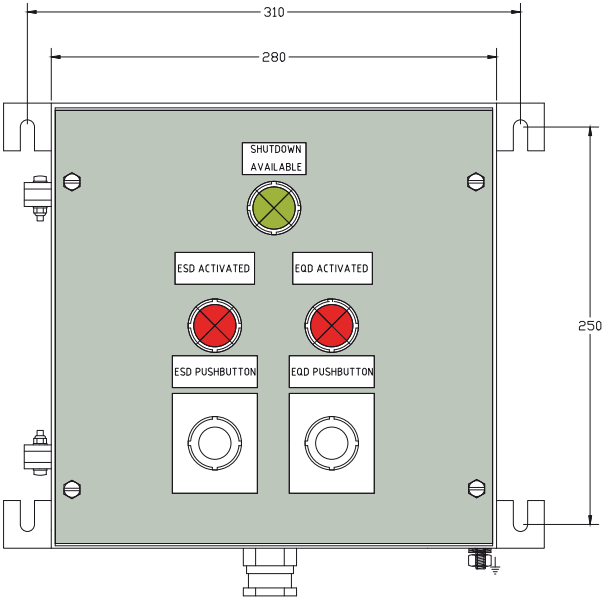

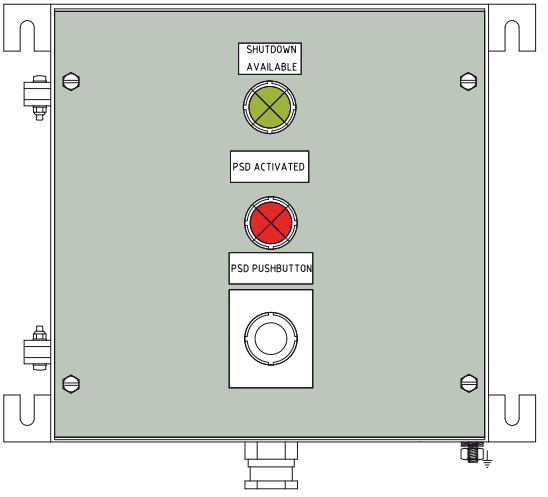

EQD, ESD, PSD Panel

PSD SEQUENCE

The following graph defines the PSD sequence, which is available for all modes of operation where the SFT is in use.

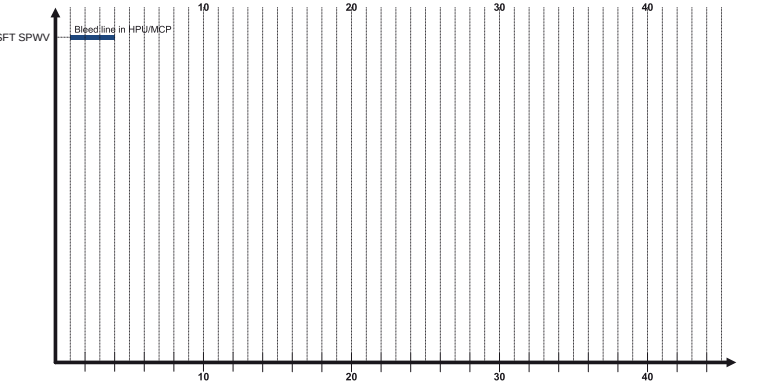

ESD - NON WIRELINE/NON COIL TUBING MODE

The following graph defines the ESD Sequence which is available for none wireline and none coil tubing mode.

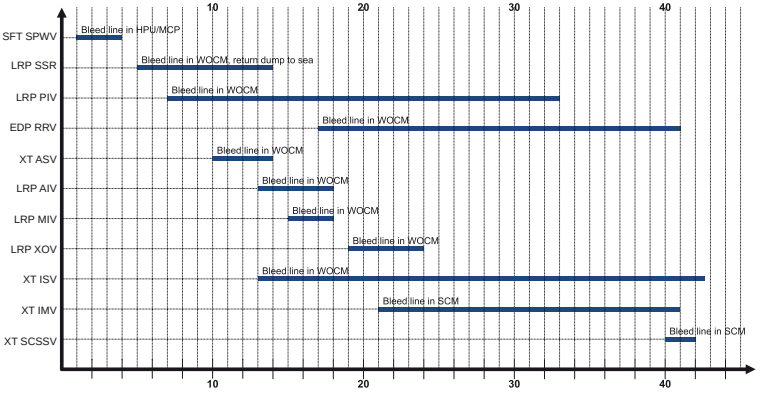

SPC60059903 / AO-045-SX-2000-120311

EQD, ESD, PSD Systems

ESD - WIRE LINE/COIL TUBING MODE

The following graph defines the ESD Sequence which is available for wireline and coil tubing mode.

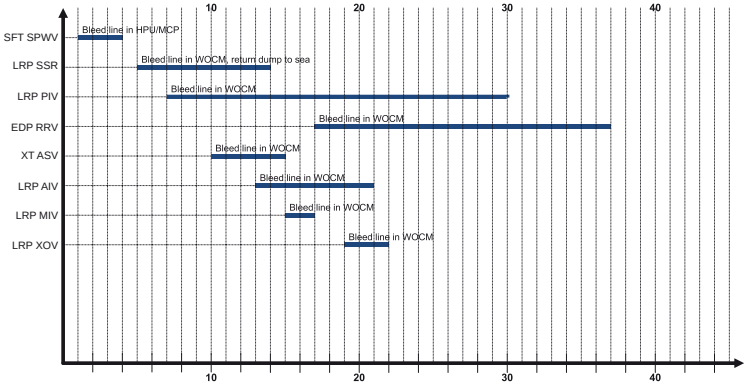

Whilst in Wireline/Coil tubing mode, it is assumed that a protective sleeve shall be in place to protect the SCSSV and that the coil tubing string shall be under constant tension. As a result, the SCSSV shall not close in an ESD and the barriers shall be LRP PIV and LRP SSR. XT production bore valves shall not close (PSV and PMV).

EQD - ALL MODES

The following graph defines the EQD sequence, which is available for all operational modes.

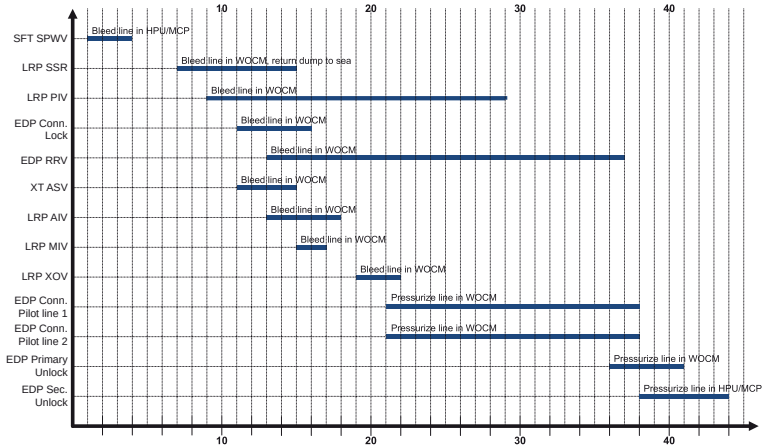

Once the EQD has been achieved, all fail-safe-close valves in LRP and XT shall also close due to the bleed couplers installed on hydraulic supply lines in the LRP connector hub.

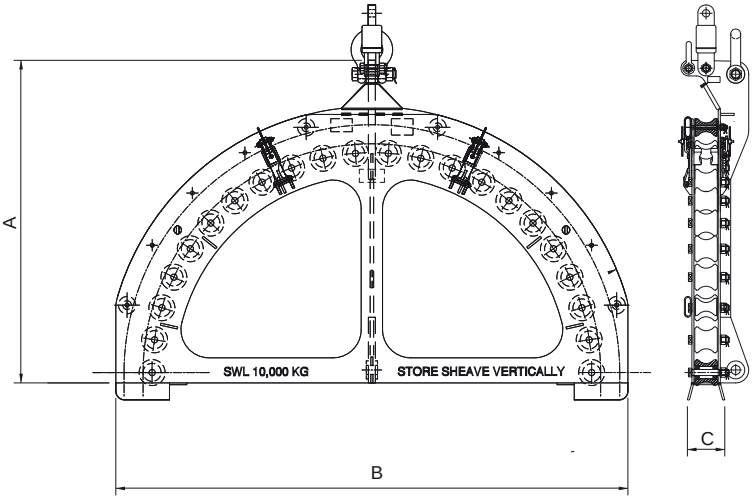

	A	B	C
HSLV UMBILICAL	1241	1782	216
TH UMBILICAL	1474	2254	216
XT UMBILICAL	1861	2955	216

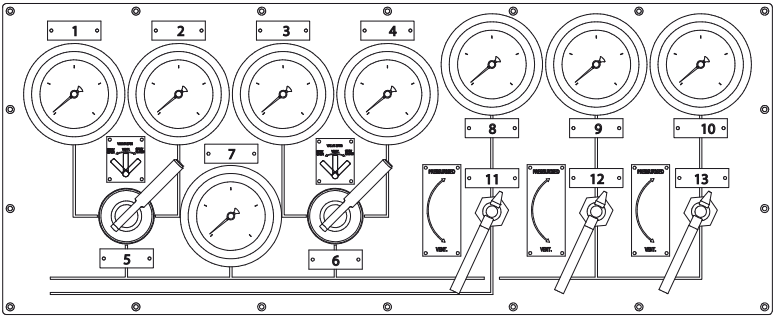

No.	Text Line 1	Text Line 2
1	PRESSURE GAUGE	SPMV OPEN
2	PRESSURE GAUGE	SPMV CLOSE
3	PRESSURE GAUGE	SPSV OPEN
4	PRESSURE GAUGE	SPSV CLOSE
5	FUNCTION VALVE	SPMV
6	FUNCTION VALVE	SPSV
7	PRESSURE GAUGE	LP SUPPLY
8	PRESSURE GAUGE	SPWV
9	PRESSURE GAUGE	SPKV
10	PRESSURE GAUGE	SPC/V
11	FUNCTION VALVE	SPWV
12	FUNCTION VALVE	SPKV
13	FUNCTION VALVE	SPC/V

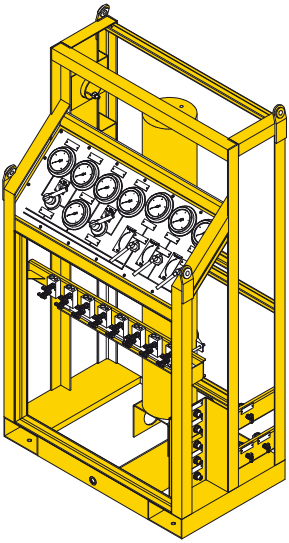

SFT Control Panel

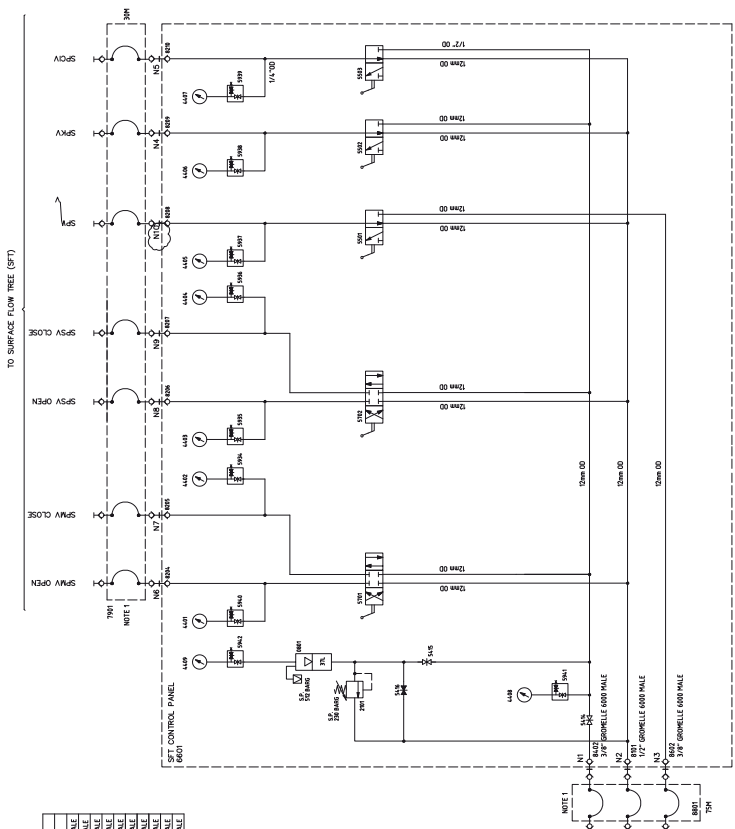

NOTES:
1. HOSES PACKED IN ONE BUNDLE

NOZZLE LIST

No	LINE NO.	DESCRIPTION	SIZE / TYPE
N1	-	LP SUPPLY	3/4" GROMELLE 6000 GC MALE
N2	-	RETURN TO WCS	1/2" GROMELLE 6000 GC MALE
N3	30	FROM WCS SPXV	3/4" GROMELLE 6000 GC MALE
N4	31	SUPPLY TO SPXV	3/4" GROMELLE 6000 GC MALE
N5	36	SUPPLY TO SPDV	3/4" GROMELLE 6000 GC MALE
N6	32	OPEN SPWV	3/4" GROMELLE 6000 GC MALE
N7	33	CLOSE SPWV	3/4" GROMELLE 6000 GC MALE
N8	34	OPEN SPSV	3/4" GROMELLE 6000 GC MALE
N9	35	CLOSE SPSV	3/4" GROMELLE 6000 GC MALE
N10	30	SUPPLY TO SPWV	3/4" GROMELLE 6000 GC MALE

2. REF. DOCUMENTS:
   - GA SFT CONSOLE : SPC6659R6
   - GA SFT PANEL : HP6559-GAD-0005
   - GA JUMPER : HP6559-GAD-0016
   - GA JUMPER : HP6559-GAD-0017
   - SCHEMATIC : HP6559-PID-0001
   - LIST OF MATERIALS : HP6559-PAL-0000
   - LIST OF MATERIALS : HP6559-PAL-0001
3. FMC P/N:
   - P600006833A (PANEL)
   - P600006833 (JUMPER SPU-SFT PANEL)
   - P600006833 (JUMPER SFT PANEL-SFT)

HP6559-PID-0002

SFT Control Panel schematic

XT Umbilical

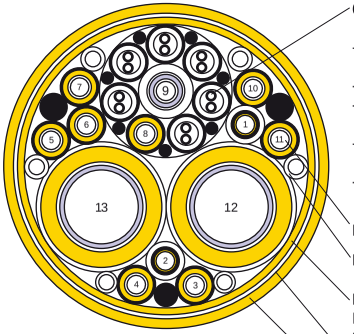

6 OFF UNSCREENED TWISTED PAIRS COMPRISING:
- 2.5mm² STRANDED COPPER CONDUTORS
- CROSS-LINK POLYEHYLENE INSULATION
- HIGH DENSITY POYETHYLENE BELTED SHEATH
- SINGLE LAYER OF GALVANISED STELL WIRE
- POLYETHYLENE SHEATH

HOSES AS PER TABLE

FLUID DRAIN TUBES

FLAME RETARDANT POLYURETHANE INNER SHEATH, 2.5mm NOMINAL THICKNESS

ARAMID FIBRE REINFORCEMENT BRAID

FLAME RETARDANT POLYURETHANE OUTER SHEATH, 3.6mm NOMINAL THICKNESS

UMBILICAL DATA		
UMBILICAL LENGTH	1650	m
OUTSIDE DIAMETER	110	mm+/-2mm
OUTER SHEATH MATERIAL	FRPU	
OUTER SHEATH COLOUR	YELLOW	
SHEATH REINFORCEMENT MATERIAL	ARAMID FIBRE	
STATIC MINIMUM BEND RADIUS	1000	mm
DYNAMIC MINIMUM BEND RADIUS	1320	mm
WEIGHT IN AIR (FILLED)	11070	kg/km
WEIGHT IN SEAWATER (FLOODED/FILLED)	2760	kg/km
CALCULATED UMBILICAL MAX BREAKLOAD	250	kN
UMBILICAL MINIMUM BREAKLOAD	175	kN
UMBILICAL MAX SWL	20	kN
TERMINATED UMBILICAL MIN BREAKLOAD	100	kN
TERMINATED UMBILICAL MAX SWL	20	kN
OPERATING TEMPERATURE	-20 to 60	deg C
STORAGE TEMPERATURE	-30 to 80	deg C

LINE NO	HOSE P/N	NB	OD (mm)	MWP (psi)	BURST PRES. (Psi)	MBR (mm)	FITTING	FITTING DESCRIPTION	SERVICE	FUNCTION NAME	FMC HOSE TAG
1	2340N-04V91	1/4"	12.5	10,000	40,000	70	1068X-6-04C	JIC 06 FEMALE (PARKER) 9/16" UNF	CHEM. INJECTION	LRP METHANOL INJECTION	11
2	2340N-04V91	1/4"	12.5	10,000	40,000	70	1068X-6-04C	JIC 06 FEMALE (PARKER) 9/16" UNF	CHEM. INJECTION	CHEMICAL	17
3	UA6904LKN	1/4"	12.8	10,000	40,000	120	JF06SS2U04HP103	JIC 06 FEMALE 9/16" UNF	HYDRAULIC	LP SUPPLY SCM	1
4	UA6904LKN	1/4"	12.8	10,000	40,000	120	JF06SS2U04HP103	JIC 06 FEMALE 9/16" UNF	HYDRAULIC	EDP SECONDARY UNLOCK	8
5	UA6904LKN	1/4"	12.8	10,000	40,000	120	JF06SS2U04HP103	JIC 06 FEMALE 9/16" UNF	HYDRAULIC	WST SEAL TEST	4
6	UA6904LKN	1/4"	12.8	10,000	40,000	120	JF06SS2U04HP103	JIC 06 FEMALE 9/16" UNF	HYDRAULIC	LP1 SUPPLY WOCM	5
7	UA6904LKN	1/4"	12.8	10,000	40,000	120	JF06SS2U04HP103	JIC 06 FEMALE 9/16" UNF	HYDRAULIC	SPARE	6
8	UA6904LKN	1/4"	12.8	10,000	40,000	120	JF06SS2U04HP103	JIC 06 FEMALE 9/16" UNF	HYDRAULIC	LP2 SUPPLY WOCM	7
9	UA6904LKN	1/4"	12.8	10,000	40,000	120	JF06SS2U04HP103	JIC 06 FEMALE 9/16" UNF	HYDRAULIC	EDP/LRP SEAL TEST/WST	3
10	UA6904LKN	1/4"	12.8	10,000	40,000	120	JF06SS2U04HP103	JIC 06 FEMALE 9/16" UNF	HYDRAULIC	HP SUPPLY SCM	13
11	UA6904LKN	1/4"	12.8	10,000	40,000	120	JF06SS2U04HP103	JIC 06 FEMALE 9/16" UNF	HYDRAULIC	HP SUPPLY TO XT HUB (NOT IN USE)	14
12	UA5216XKX-HC/1	1" HCR	43.5	7,500	22,500	700	AF16SS2U16HC/1	1" AUTOCLAVE FEMALE 1-3/8" UNF	ANNULUS CIRC.	ANNULUS CIRCULATION 1	18
13	UA5216XKX-HC/1	1" HCR	43.5	7,500	22,500	700	AF16SS2U16HC/1	1" AUTOCLAVE FEMALE 1-3/8" UNF	ANNULUS CIRC.	ANNULUS CIRCULATION 2	19

TH Umbilical

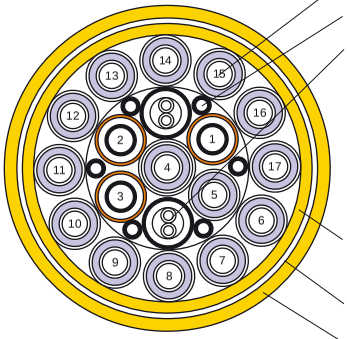

HOSES AS PER TABLE

FLUID DRAIN TUBES

2 OFF UNSCREENED TWISTED PAIRS COMPRISING:
- 2.5mm² STRANDED COPPER CONDUTORS
- CROSS-LINK POLYEHYLENE INSULATION
- HIGH DENSITY POYETHYLENE BELTED SHEATH
- STELL WIRE REINFORCEMENT
- POLYETHYLENE SHEATH

FLAME RETARDANT POLYURETHANE INNER SHEATH, 2.6mm NOMINAL THICKNESS

ARAMID FIBRE REINFORCEMENT BRAID

FLAME RETARDANT POLYURETHANE OUTER SHEATH, 3.2mm NOMINAL THICKNESS

UMBILICAL DATA		
UMBILICAL LENGTH	1650	m
OUTSIDE DIAMETER	81	mm+/-2mm
OUTER SHEATH MATERIAL	FRPU	
OUTER SHEATH COLOUR	ORANGE	
SHEATH REINFORCEMENT MATERIAL	ARAMID FIBRE	
STATIC MINIMUM BEND RADIUS	630	mm
DYNAMIC MINIMUM BEND RADIUS	975	mm
WEIGHT IN AIR (FILLED)	5740	kg/km
WEIGHT IN SEAWATER (FLOODED/FILLED)	1280	kg/km
CALCULATED UMBILICAL MAX BREAKLOAD	250	kN
UMBILICAL MINIMUM BREAKLOAD	175	kN
UMBILICAL MAX SWL	20	kN
TERMINATED UMBILICAL MIN BREAKLOAD	50	kN
TERMINATED UMBILICAL MAX SWL	10	kN
OPERATING TEMPERATURE	-18 to 60	deg C
STORAGE TEMPERATURE	-20 to 60	deg C

LINE NO	HOSE P/N	NB	OD (mm)	MWP (psi)	BURST PRES. (psi)	MBR (mm)	FITTING	FITTING DESCRIPTION	SERVICE	FUNCTION NAME	FMC HOSE TAG
1	2340N-04V91	1/4"	12.5	10,000	40,000	70	1068X-6-04C	JIC 6 FEMALE (PARKER) 9/16" UNF	CHEMICAL	DOWN-HOLE CHEMICAL INJECTION	11
2	2340N-04V91	1/4"	12.5	10,000	40,000	70	1068X-6-04C	JIC 6 FEMALE (PARKER) 9/16" UNF	CHEMICAL	SPARE	16
3	2340N-04V91	1/4"	12.5	10,000	40,000	70	1068X-6-04C	JIC 6 FEMALE (PARKER) 9/16" UNF	CHEMICAL	CHEMICAL CHEMICAL SPARE	17
4	UA6904LKN	1/4"	12.8	10,000	40,000	120	JF06SS2U04HPI03	JIC 6 FEMALE 9/16" UNF	HYDRAULIC	TH UNLOCK	1
5	UA6904LKN	1/4"	12.8	10,000	40,000	120	JF06SS2U04HP103	JIC 6 FEMALE 9/16" UNF	HYDRAULIC	TH LOCK	2
6	UA6904LKN	1/4"	12.8	10,000	40,000	120	JF06SS2U04HPI03	JIC 6 FEMALE 9/16" UNF	HYDRAULIC	TH LOCK VERIFICATION	3
7	UA6904LKN	1/4"	12.8	10,000	40,000	120	JF06SS2U04HPI03	JIC 6 FEMALE 9/16" UNF	HYDRAULIC	THRT LATCH VERIFICATION	4
8	UA6904LKN	1/4"	12.8	10,000	40,000	120	JF06SS2U04HPI03	JIC 6 FEMALE 9/16" UNF	HYDRAULIC	THRT UNLATCH	5
9	UA6904LKN	1/4"	12.8	10,000	40,000	120	JF06SS2U04HP103	JIC 6 FEMALE 9/16" UNF	HYDRAULIC	SPARE	6
10	UA6904LKN	1/4"	12.8	10,000	40,000	120	JF06SS2U04HP103	JIC 6 FEMALE 9/16" UNF	HYDRAULIC	THRT LATCH	7
11	UA6904LKN	1/4"	12.8	10,000	40,000	120	JF06SS2U04HPI03	JIC 6 FEMALE 9/16" UNF	HYDRAULIC	TH SOFT LAND	8
12	UA6904LKN	1/4"	12.8	10,000	40,000	120	JF06SS2U04HPI03	JIC 6 FEMALE 9/16" UNF	HYDRAULIC	TH SEAL TEST	9
13	UA6904LKN	1/4"	12.8	10,000	40,000	120	JF06SS2U04HP103	JIC 6 FEMALE 9/16" UNF	HYDRAULIC	ANNULUS SLIDING SLEEVE OPEN	10
14	UA6904LKN	1/4"	12.8	10,000	40,000	120	JF06SS2U04HPI03	JIC 6 FEMALE 9/16" UNF	HYDRAULIC	ANNULUS SLIDING SLEEVE CLOSE	12
15	UA6904LKN	1/4"	12.8	10,000	40,000	120	JF06SS2U04HP103	JIC 6 FEMALE 9/16" UNF	HYDRAULIC	IWC OPEN	13
16	UA6904LKN	1/4"	12.8	10,000	40,000	120	JF06SS2U04HP103	JIC 6 FEMALE 9/16" UNF	HYDRAULIC	IWC CLOSE	14
17	UA6904LKN	1/4"	12.8	10,000	40,000	120	JF06SS2U04HP103	JIC 6 FEMALE 9/16" UNF	HYDRAULIC	SCSSV	15

HSLV Umbilical

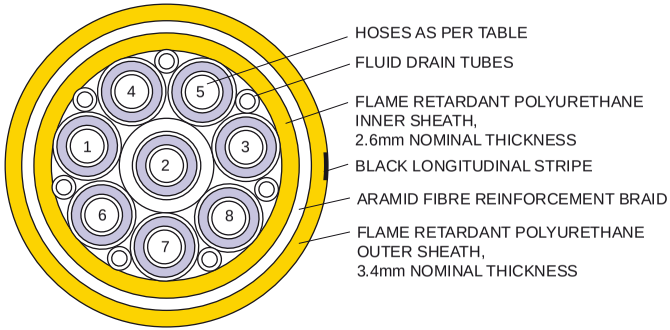

UMBILICAL DATA		
UMBILICAL LENGTH	200	m
OUTSIDE DIAMETER	59	mm+/-2mm
OUTER SHEATH MATERIAL	FRPU	
OUTER SHEATH COLOUR	YELLOW C/W BLACK STRIPE	
SHEATH REINFORCEMENT MATERIAL	ARAMID FIBRE	
STATIC MINIMUM BEND RADIUS	385	mm
DYNAMIC MINIMUM BEND RADIUS	610	mm
WEIGHT IN AIR (FILLED)	3020	kg/km
WEIGHT IN SEAWATER (FLOODED/FILLED)	300	kg/km
CALCULATED UMBILICAL MAX BREAKLOAD	250	kN
UMBILICAL MINIMUM BREAKLOAD	175	kN
UMBILICAL MAX SWL	20	kN
TERMINATED UMBILICAL MIN BREAKLOAD	50	kN
TERMINATED UMBILICAL MAX SWL	10	kN
OPERATING TEMPERATURE	-20 to 60	deg C
STORAGE TEMPERATURE	-20 to 60	deg C

LINE NO	HOSE P/N	NB	OD (mm)	MWP (psi)	BURST PRESSURE	MBR (mm)	FITTING	FITTING DESCRIPTION	SERVICE	FUNCTION NAME	FMC HOSE TAG
1	UA6904LKN	1/4"	12.8	10,000	40,000	120	JF06SS2U04HP103	JIC 06 FEMALE 9/16" UNF	HYDRAULIC	HSLV UPPER OPEN	41
2	UA6904LKN	1/4"	12.8	10,000	40,000	120	JF06SS2U04HP103	JIC 06 FEMALE 9/16" UNF	HYDRAULIC	HSLV UPPER CLOSE	42
3	UA6904LKN	1/4"	12.8	10,000	40,000	120	JF06SS2U04HP103	JIC 06 FEMALE 9/16" UNF	CHEMICAL	HSLV UPPER CHEM. INJECTION	43
4	UA6904LKN	1/4"	12.8	10,000	40,000	120	JF06SS2U04HP103	JIC 06 FEMALE 9/16" UNF	HYDRAULIC	HYDRAULIC SPARE	44
5	UA6904LKN	1/4"	12.8	10,000	40,000	120	JF06SS2U04HP103	JIC 06 FEMALE 9/16" UNF	HYDRAULIC	HSLV LOWER OPEN	45
6	UA6904LKN	1/4"	12.8	10,000	40,000	120	JF06SS2U04HP103	JIC 06 FEMALE 9/16" UNF	HYDRAULIC	HSLV LOWER CLOSE	46
7	UA6904LKN	1/4"	12.8	10,000	40,000	120	JF06SS2U04HP103	JIC 06 FEMALE 9/16" UNF	CHEMICAL	HSLV LOWER CHEM. INJECTION	47
8	UA6904LKN	1/4"	12.8	10,000	40,000	120	JF06SS2U04HP103	JIC 06 FEMALE 9/16" UNF	CHEMICAL	CHEMICAL SPARE	48

NOTES

09. Manifold and Foundation

MANIFOLD SYSTEM, SINGLE HEADER

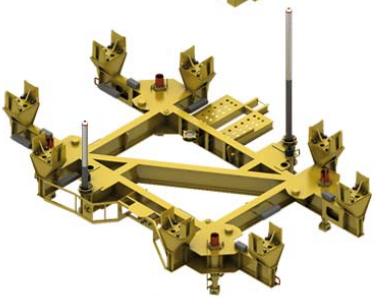

MANIFOLD SUPPORT STRUCTURE, SINGLE HEADER

CLOSED CAISSON FOUNDATION, SINGLE HEADER

Manifold single header and foundation overview

MANIFOLD SYSTEM, DUAL HEADER

MANIFOLD SUPPORT STRUCTURE, DUAL HEADER

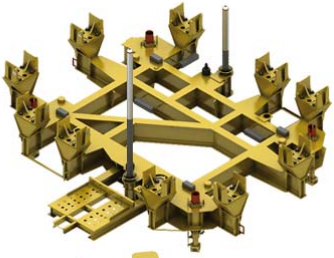

CLOSED CAISSON FOUNDATION, DUAL HEADER

Manifold dual header and foundation overview

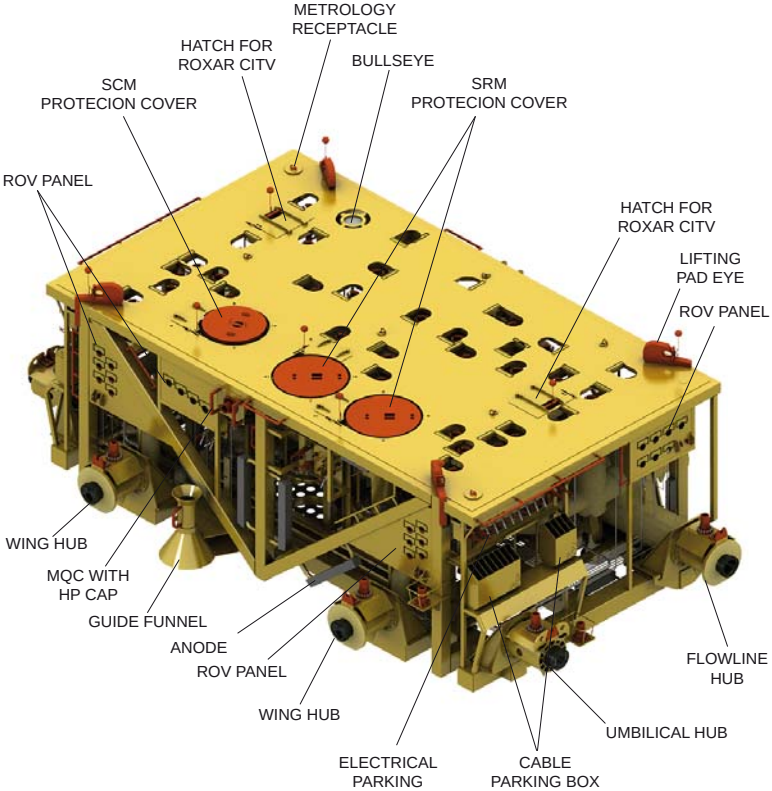

Manifold Module single header, typical

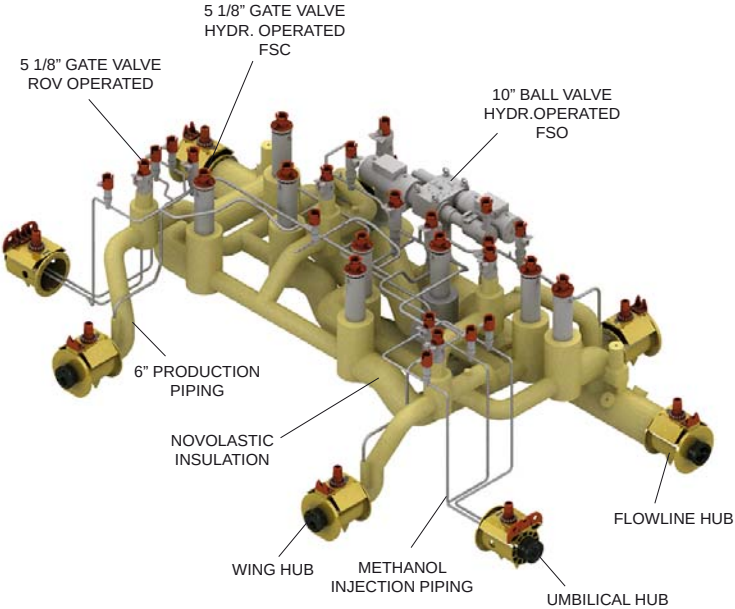

Large bore, single header, typical

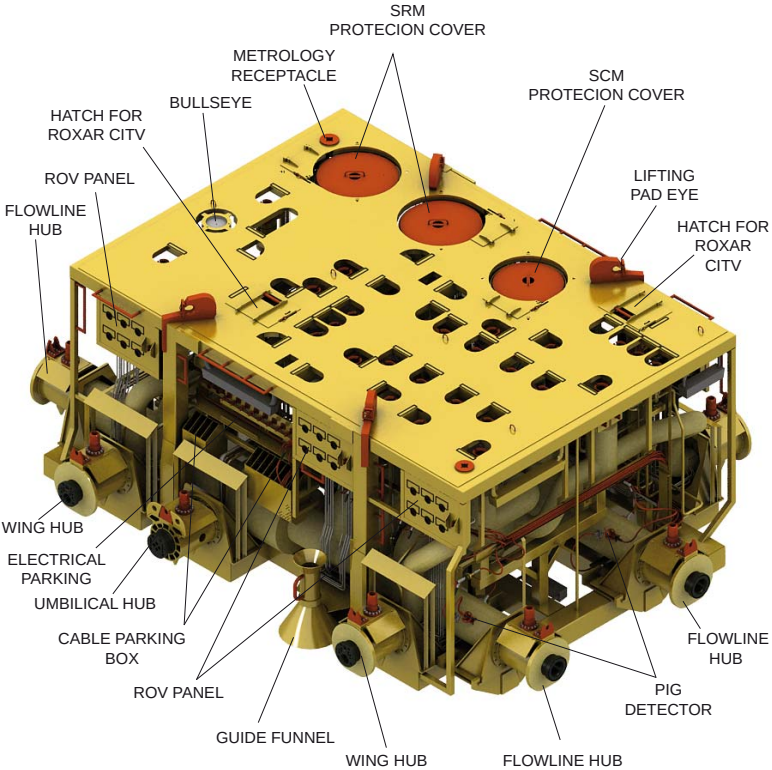

Manifold Module dual header

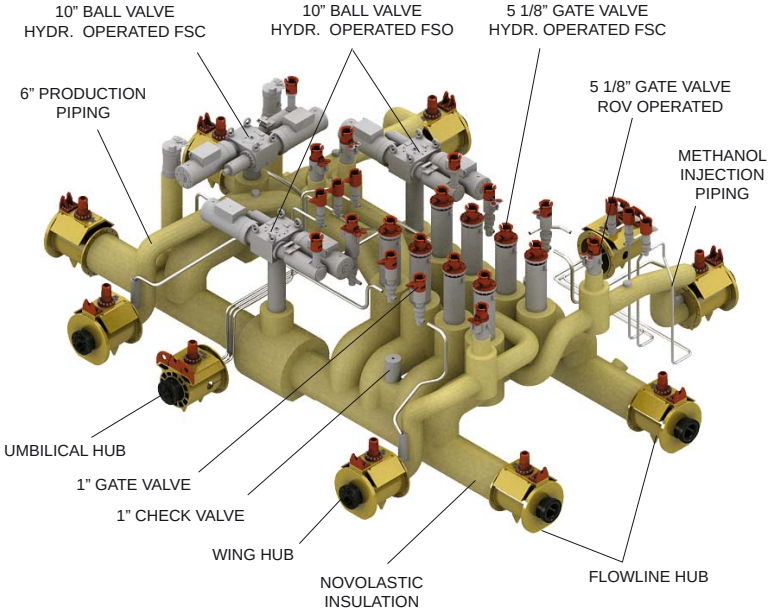

Large bore, dual header

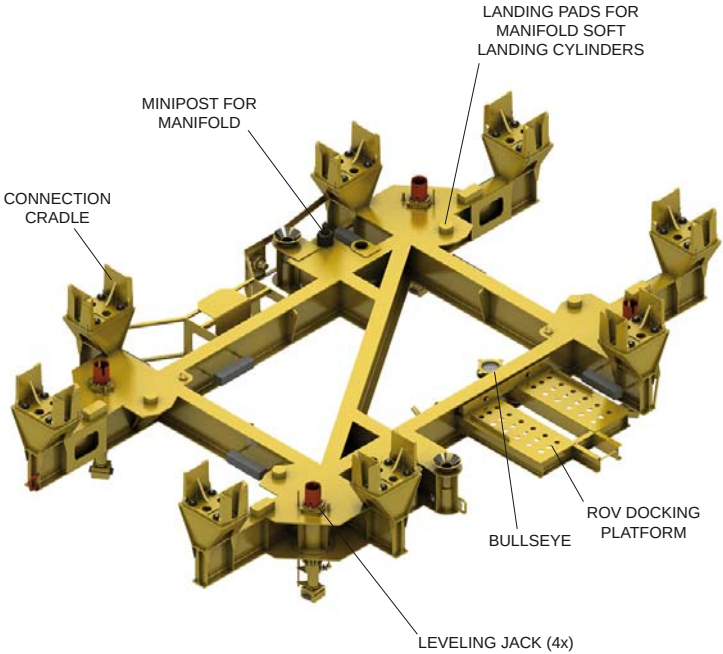

Manifold Support Structure (MSS), single header

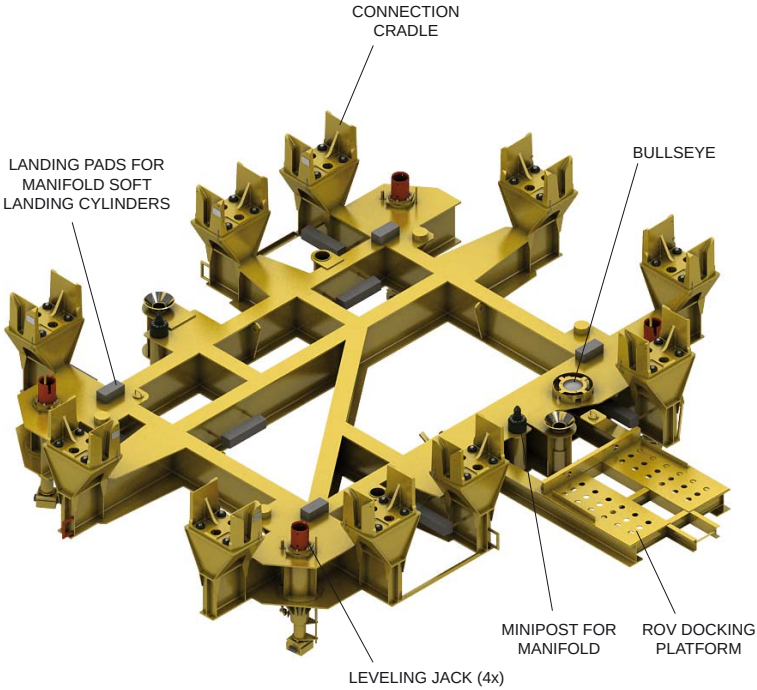

Manifold Support Structure (MSS), dual header

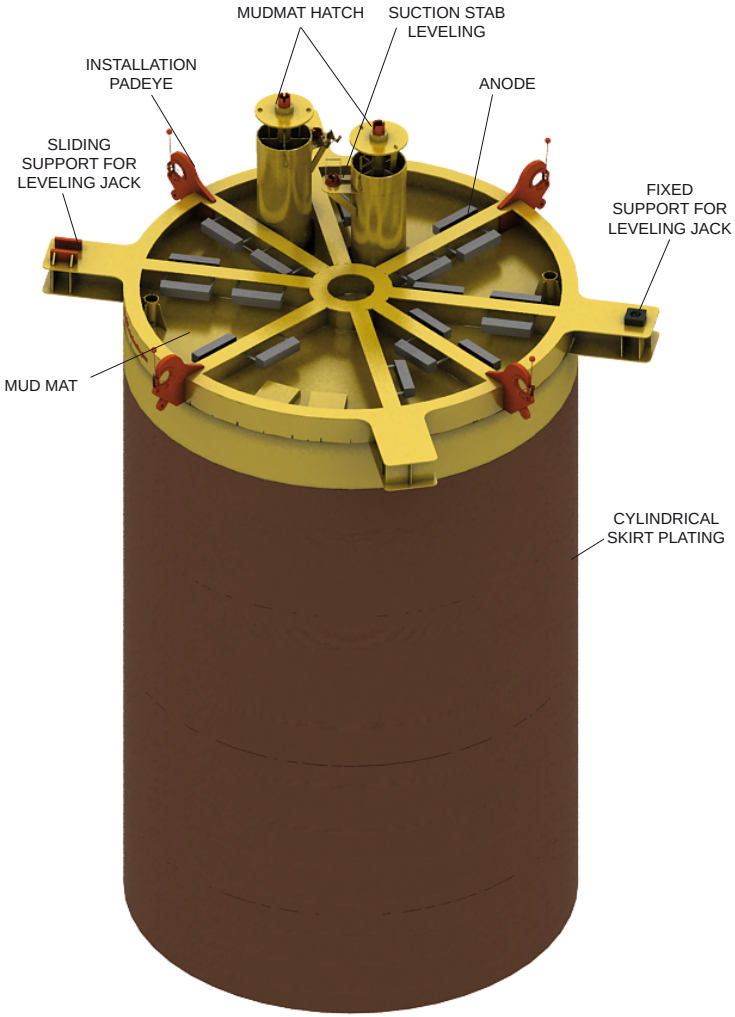

Closed Caisson Foundation (CCF), single header

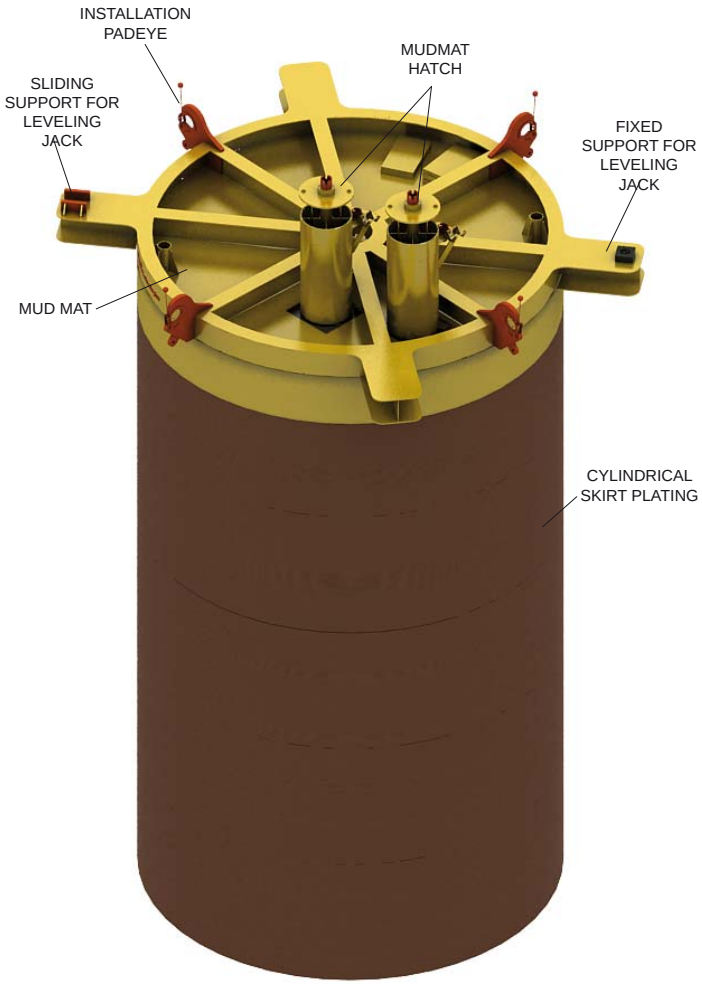

Closed Caisson Foundation (CCF), dual header

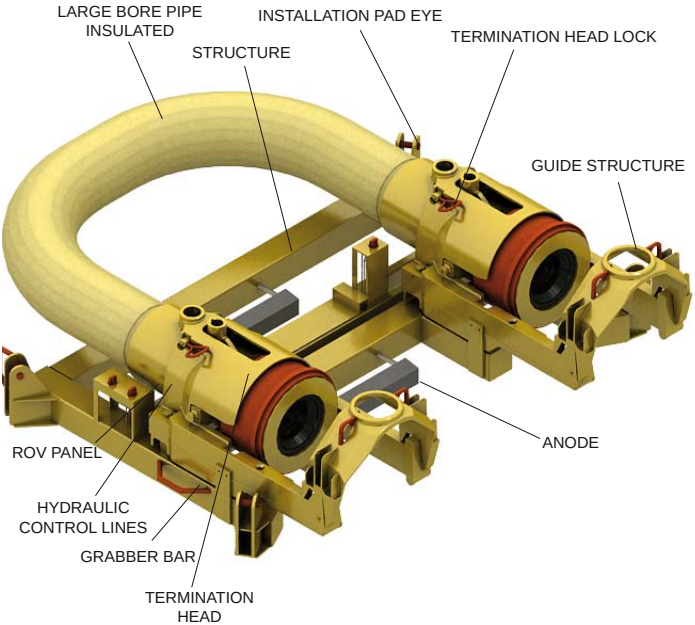

Pig Loop Module

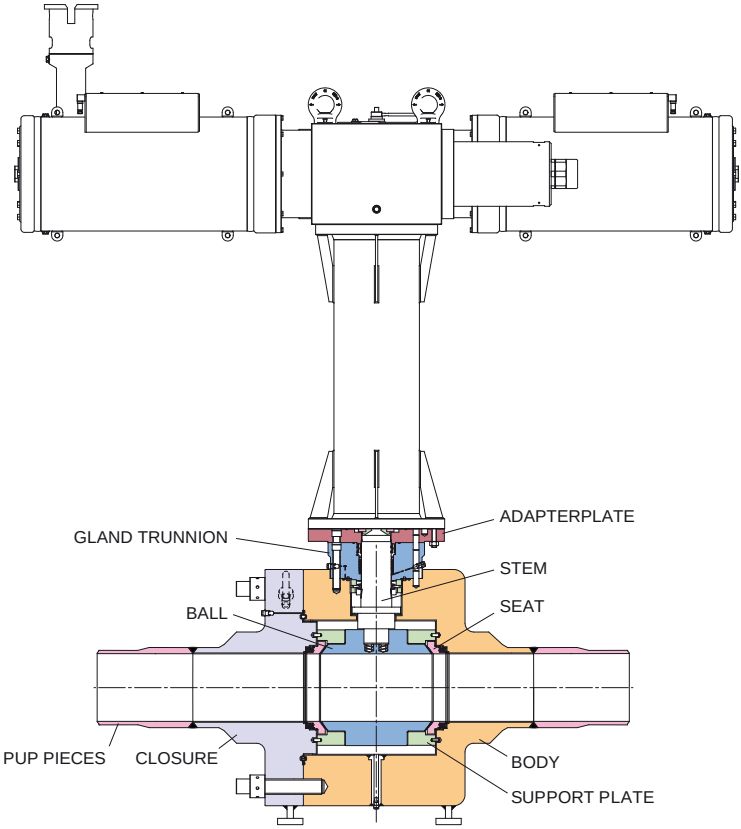

12” Ball Valve, hydraulic actuated

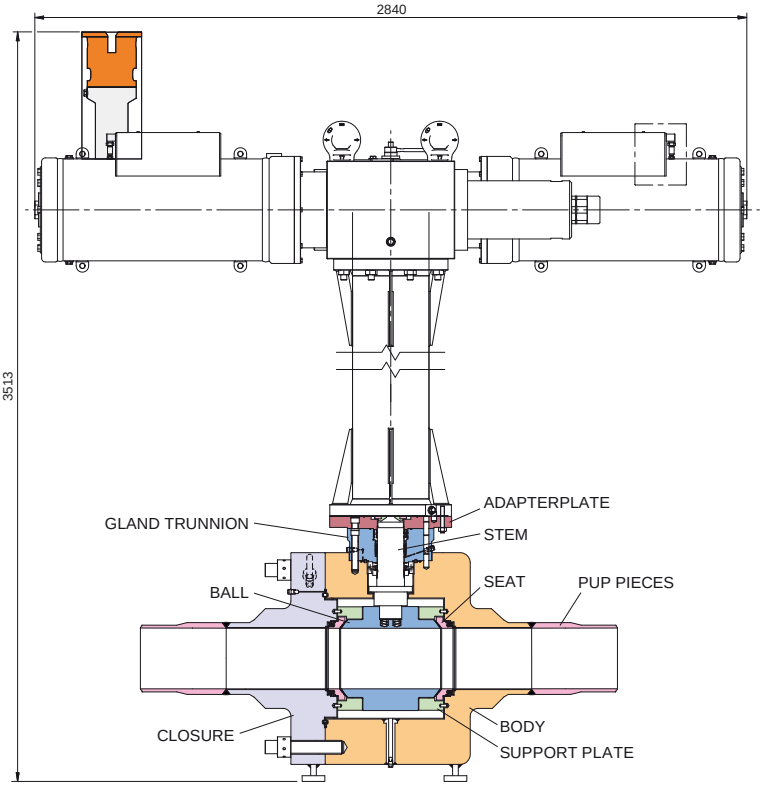

10” Ball Valve, hydraulic actuated

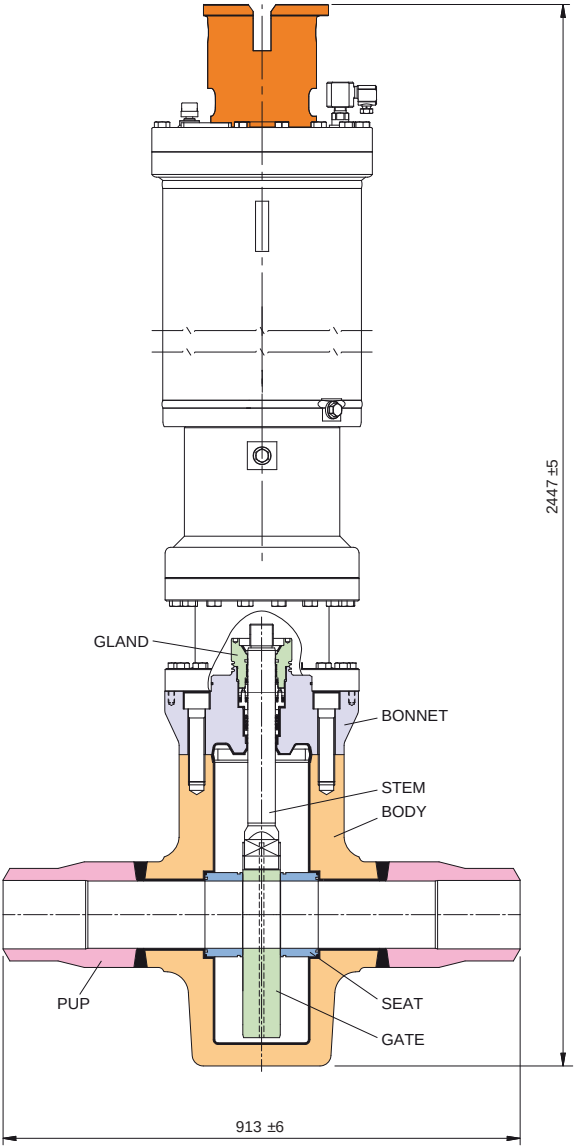

5 1/8” Gate Valve, hydraulic actuated

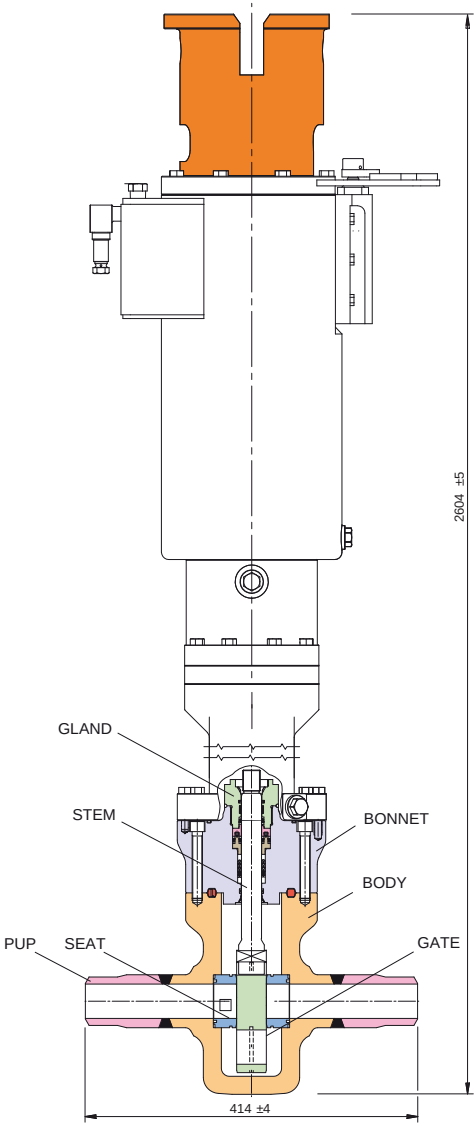

2 1/16” Gate Valve, hydraulic actuated

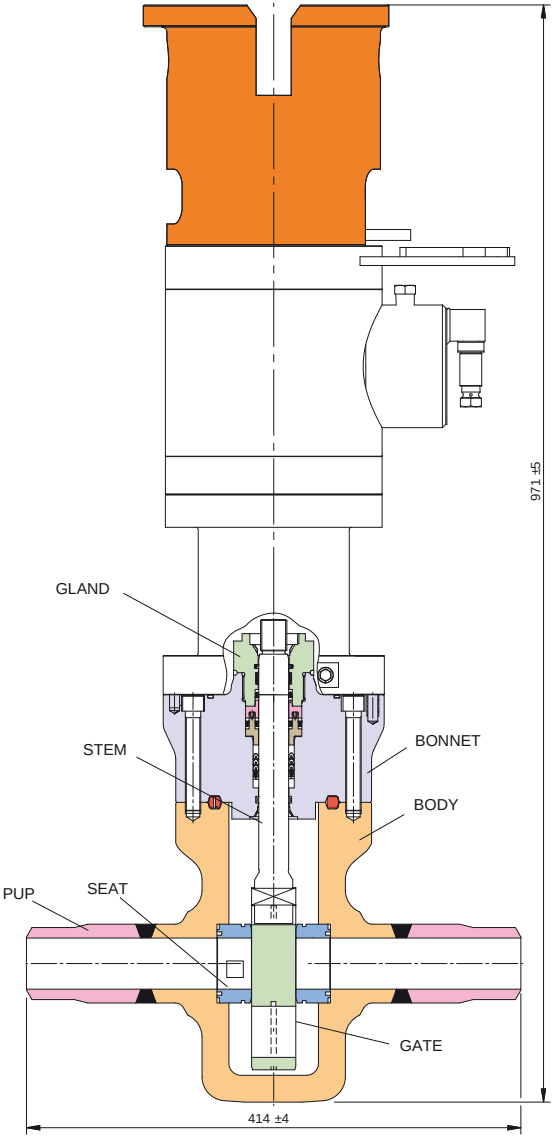

2 1/16” Gate Valve, ROV operated

SKOFLO

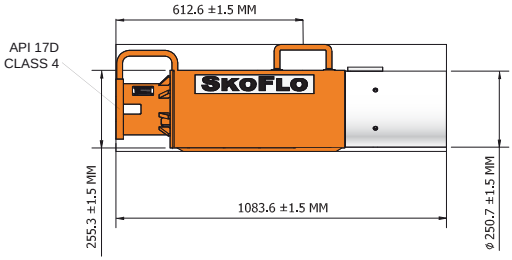

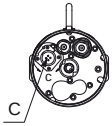

DETAIL C

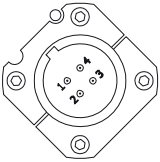

ROXAR

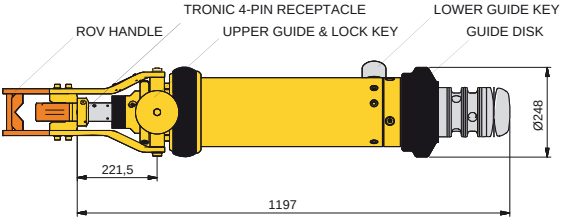

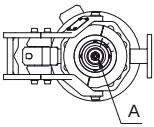

DETAIL A

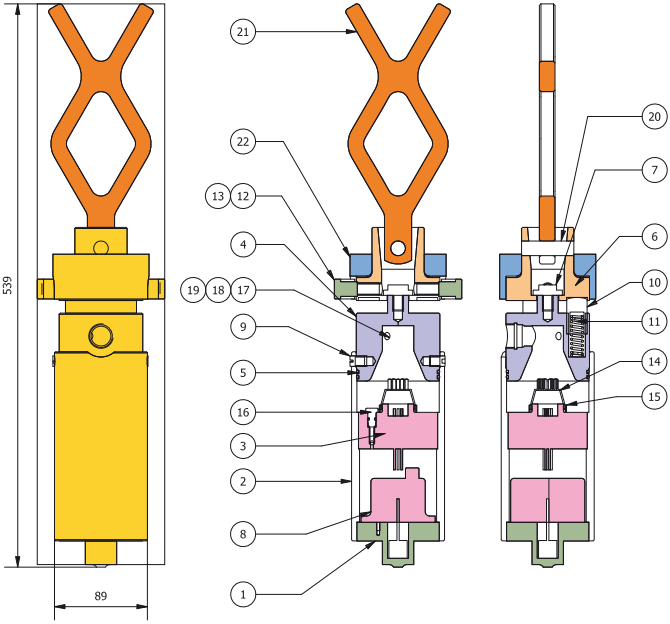

Penetrator top view

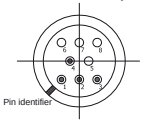

ITEM	DESCRIPTION
1	Sensor front compact
2	Tube Singel elecronic
3	Penetrator Compact Monitor
4	Cap Bennex
5	O-ring forsensor cap
6	Retainer
7	Retainer Bolt
8	DSP - Electronics set
9	Stop screw M10
10	Guide
11	Spring

ITEM	DESCRIPTION
12	Compact Roller Bolt
13	Compact Roller
14	Boot seal for compact penetrator
15	Locking sleeve for penetrator
16	Fill screw
17	Fill screw Bennec MkII
18	O - ring fill screw 5x1
19	O - ring fill screw 6x1
20	Locking Pin
21	ROV Handle - Fishtail
22	Support Ring

Pig detector

Size	Type	Operation	P/N (Doc. No.)	Qty							
				M101	M102	M103	M104	M201	M202	M203	M204
12”	Ball	Hydraulic FSO W/ROV override	P6000068758 (PDS60061477)						1	1	
10”	Ball	Hydraulic FSO W/ROV override	P6000068757 (PDS60061476)	2	1	1	1				
10”	Ball	Hydraulic FSC W/ROV override	P6000068756 (PDS60061475)	1							
5 1/8”	Gate	Hydraulic FSC W/ROV override	P6000069621 (PDS60062719)	8	8	8	8	4	8	8	4
5 1/8”	Gate	Manual by ROV	P6000069622 (PDS60062720)	4	4	4	4	4	4	4	4
2 1/16”	Gate	Hydraulic FSC w/ROV override	P6000070443 (PDS60063336)	1	1	2	1	1	2	1	1
2 1/16”	Gate	Hydraulic FSO w/ROV override	P6000070451 (PDS60063340)		1		1			1	
2 1/16”	Gate	Manual by ROV	P6000070757 (PDS60063579)	4	4	4	4	4	4	4	4
1”	Gate	Hydraulic FSC w/ROV override	P6000062862 (PDS60053122)	2	2	2	2	2	2	2	2
1”	Gate	Manual by ROV	P6000033077 (PDS60053127)	8	9	9	9	9	9	9	9
1”	Check	Check Valve	P6000087415 (PDS60077754)	2	2	2	2	2	2	2	2
1/2”	Ball	Manual by ROV	P6000081408 (PDS60072511)	36	40	40	40	42	40	40	42
2 1/16”	Gate	Hydraulic FSC W/ROV override	P6000078320 (PDS60070093)	2	2	2	2	1	2	2	1
	Roxar high flow	Chemical Injection Valve CIV, Roxar, Remote Operated Retrievable Docking Canister Single High, 690 Bar, Canbus Cia 443	P6000070137 (-)	2	2	2	2	1	2	2	1
	SkoFlo Single Core Low Flow HTD	Chemical Injection Valve (CIV), CIV, Skoflo, Remote Operated Retrievable Docking Canister Single Low, 690 Bar, Canbus Cia443	P6000070136 (-)					1			1

Valve description	P/N	Breakout torque (Nm)	Running torque (Nm)	Accepted pressure to open or close (Bar)	No. of turns from open to closed*
12” ID Ball Valve, w/ FSO Act.	P6000068758	1300	1700	160	72.6
10” ID Ball Valve, w/ FSO Act.	P6000068757	1300	1700	160	45.3
10” ID Ball Valve, w/ FSC Act.	P6000068756	1300	1400	160	45.3
5 1/8” Gate Valve, w/ FSC Act.	P6000069621	1500	1070	160	50
5 1/8” Gate Valve, ROV Operated	P6000069622	1295	325	N/A	17.25
2 1/16” Gate Valve, w/ FSC Act.	P6000070443	250	230	160	21.7
2 1/16” Gate Valve, Hyd. Act, FSO ROV Over-ride	P6000070451	160	300	160	21.7
2 1/16” Gate Valve, w/ FSC Act.	P6000078320	250	230	160	21.7
2 1/16” Gate Valve, ROV Operated	P6000070757	182	74	N/A	6.5
1” Check Valve	P6000087415	N/A	N/A	N/A	N/A
1” Gate Valve, w/ FSC Actuator	P6000062862	150	160	140	6.2
1” Gate Valve, ROV Operated	P6000033077	130	90	N/A	3.3

* Direction to open for valves above is CCW

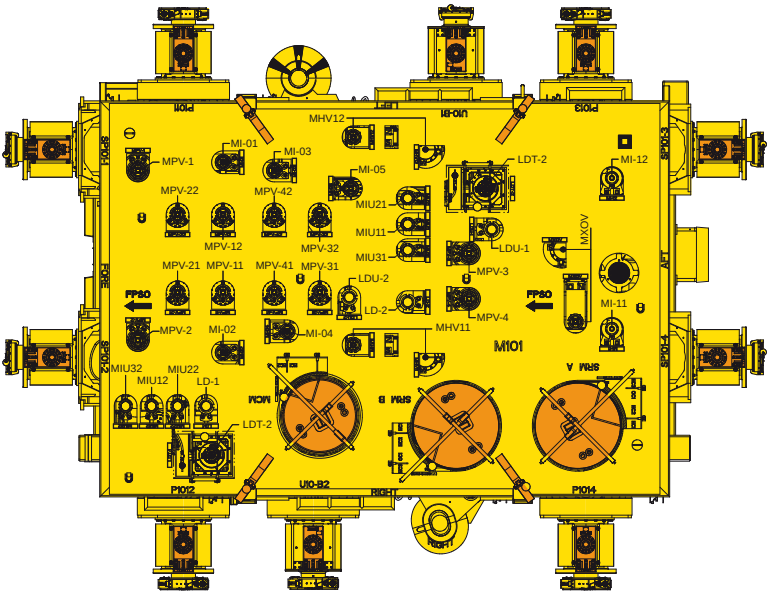

M101: DU600057163/ AO-045-SM-2000-180029

Manifold Module, Topview, M101

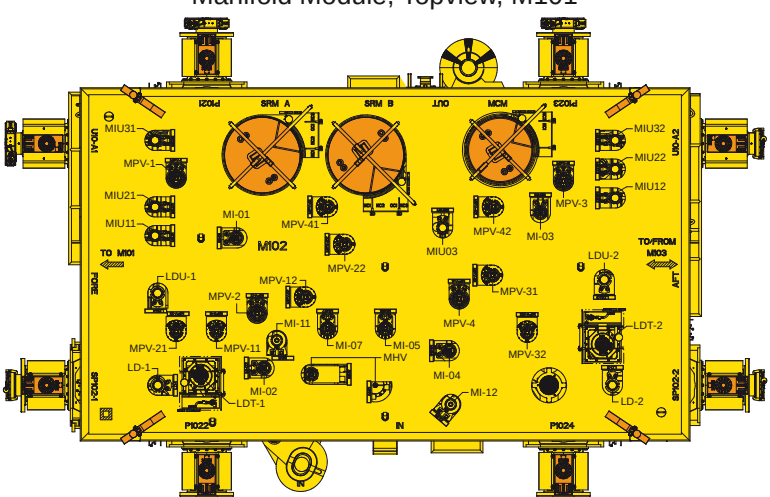

M102: DU600057170/ AO-045-SM-2000-180035

Manifold Module, Topview, M102

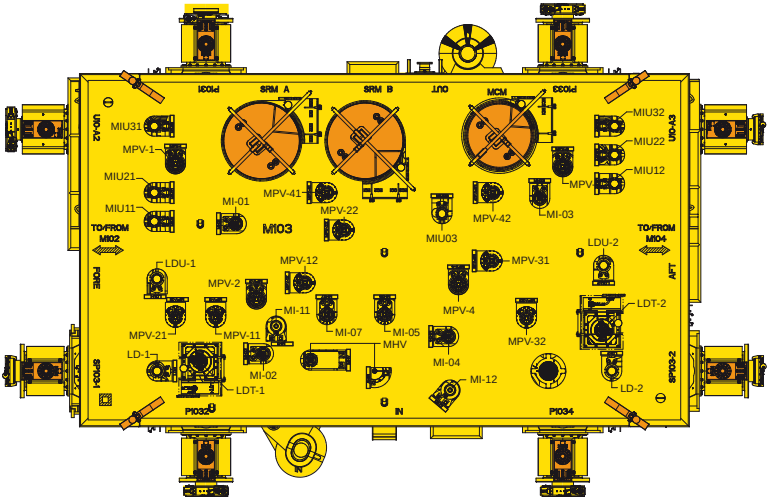

M103: DU600057176/ AO-045-SM-2000-180041

Manifold Module, Topview, M103

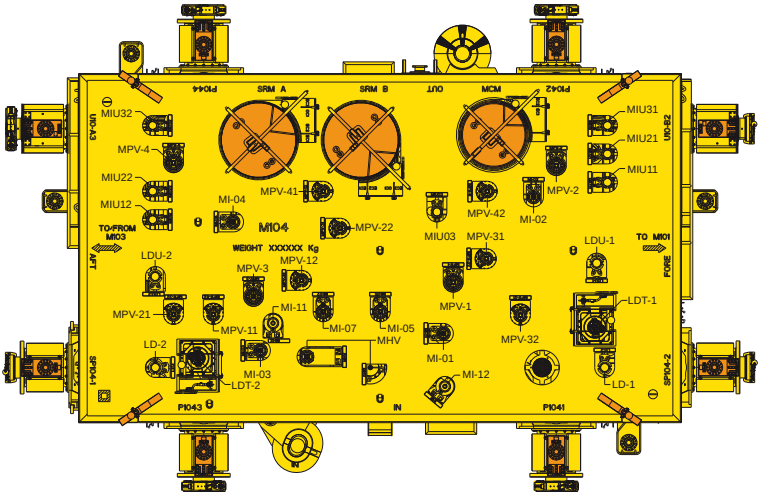

M104: DU600057182/ AO-045-SM-2000-180046

Manifold Module, Topview, M104

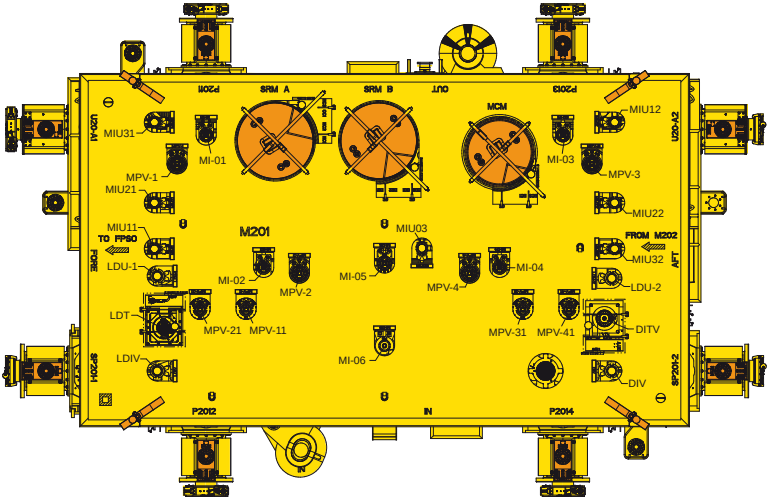

M201: DU600057188/ AO-045-SM-2000-180051

Manifold Module, Topview, M201

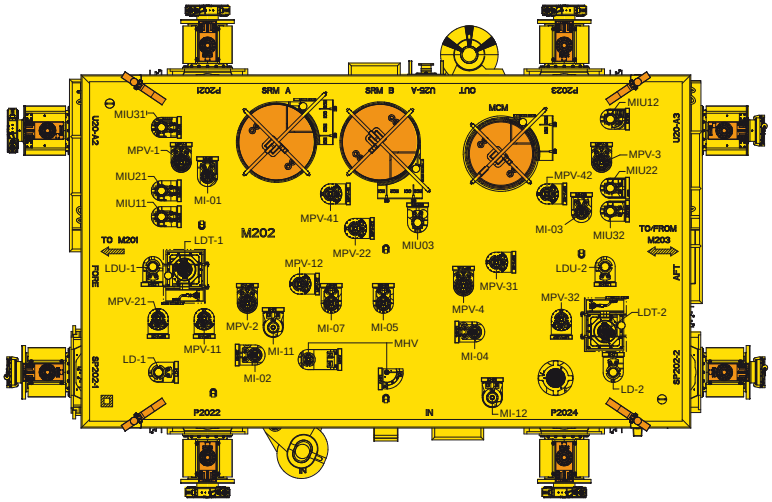

M202: DU600057194/ AO-045-SM-2000-180058

Manifold Module, Topview, M202

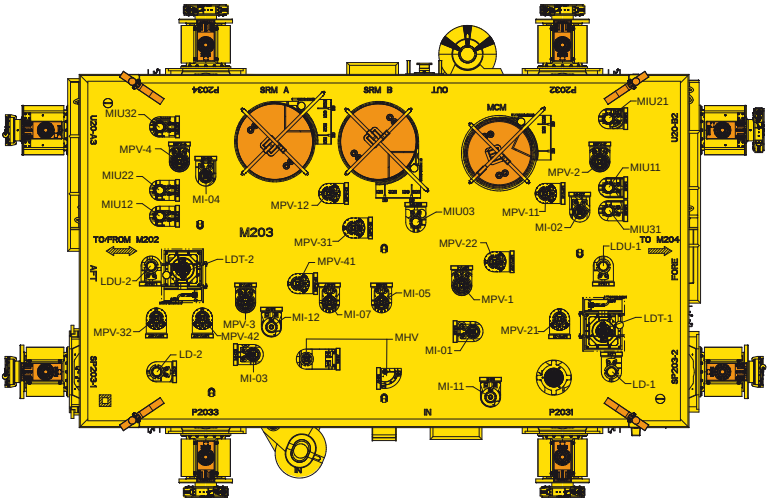

M203: DU600057200/ AO-045-SM-2000-180063

Manifold Module, Topview, M203

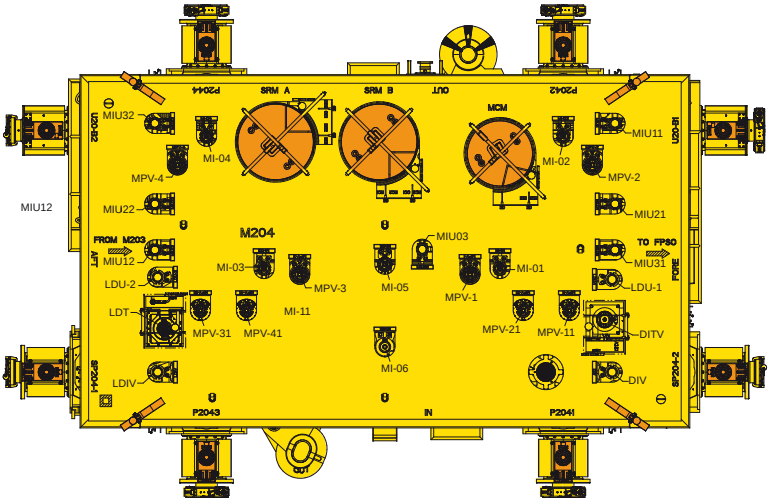

M204: DU600057206/ AO-045-SM-2000-180068

Manifold Module, Topview, M204

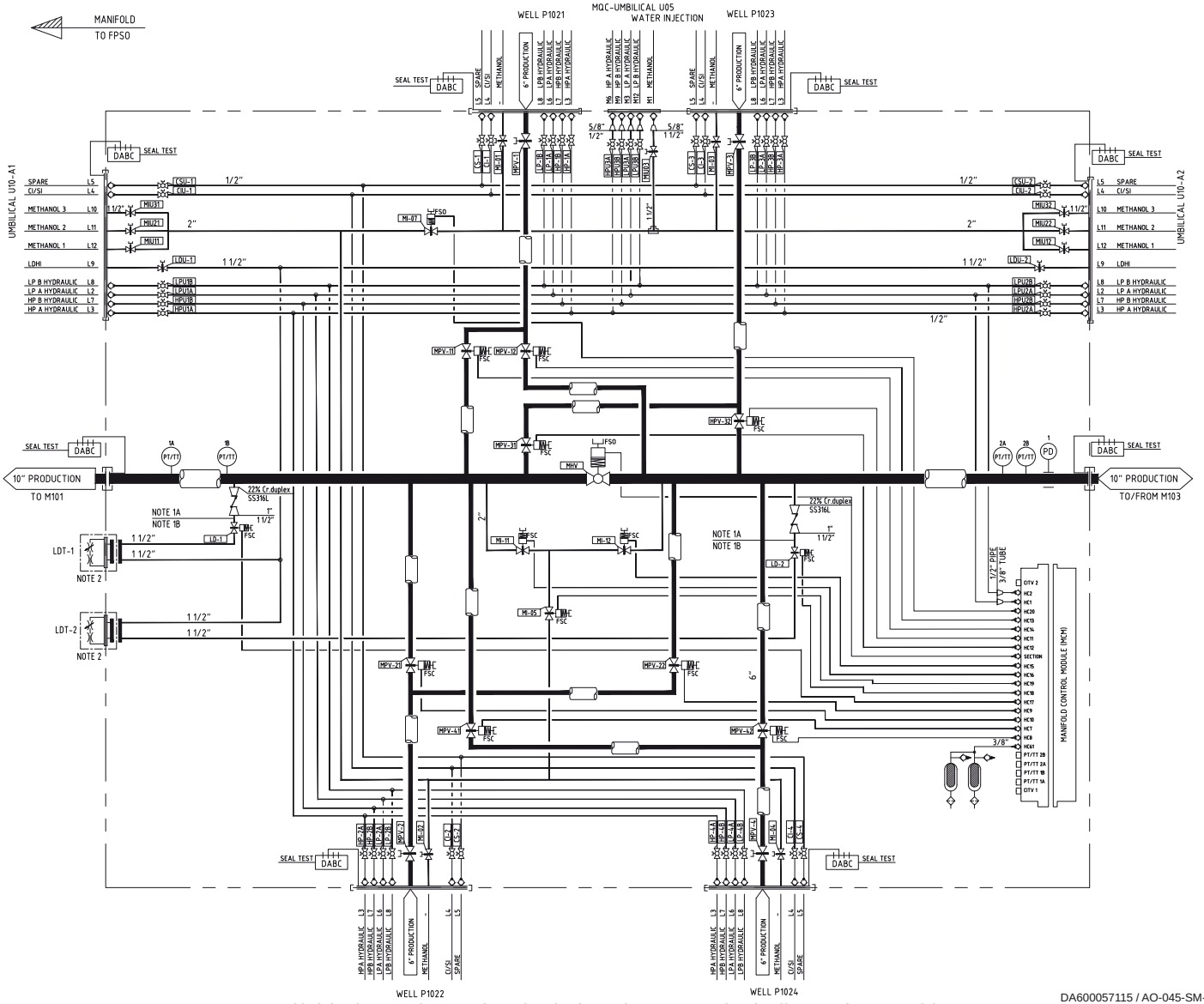

DA600057115 / AO-045-SM-2000-180031

Manifold Flow schematic, single header, M102 including valve marking

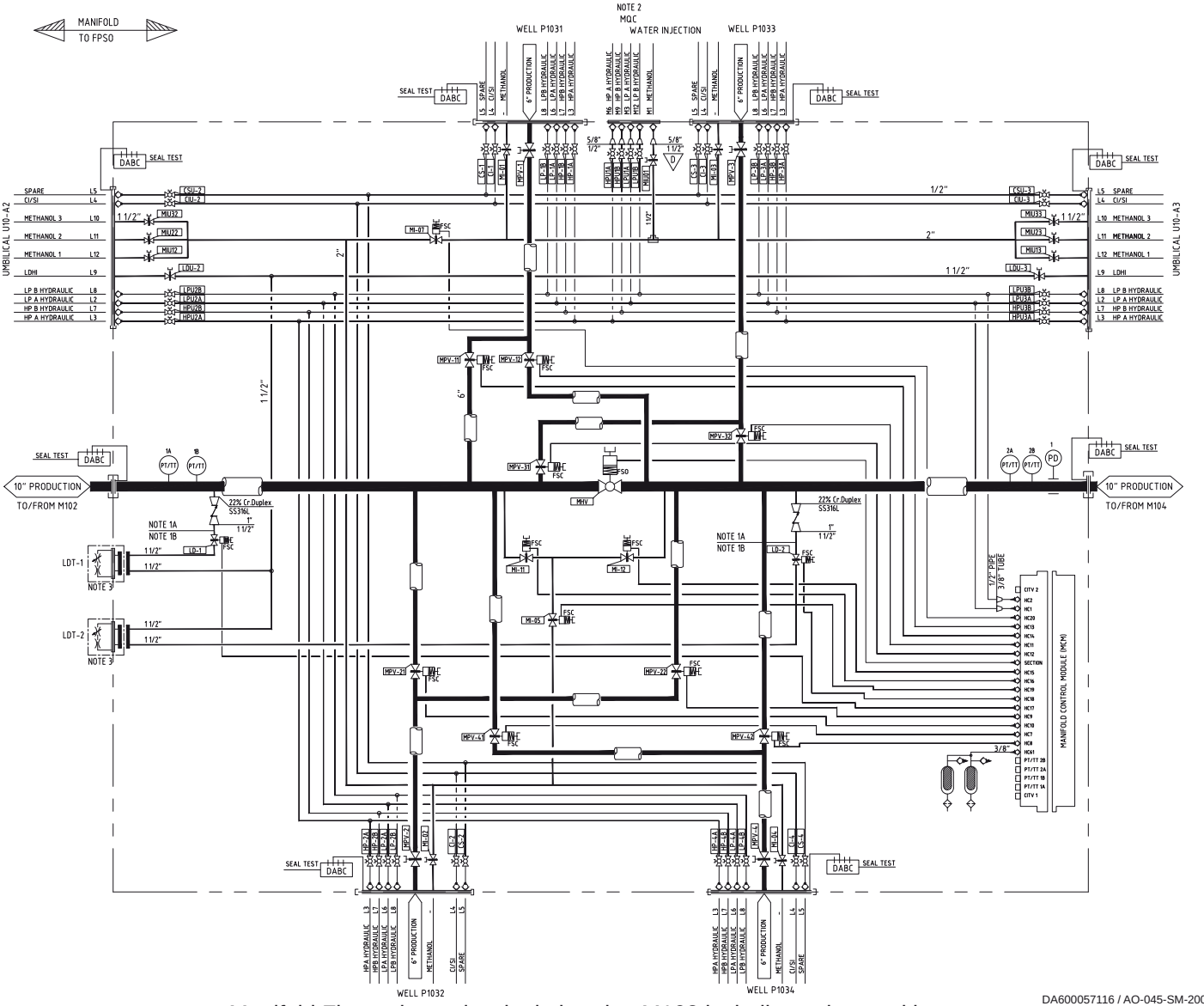

DA600057116 / AO-045-SM-2000-180037

Manifold Flow schematic, single header, M103 including valve marking

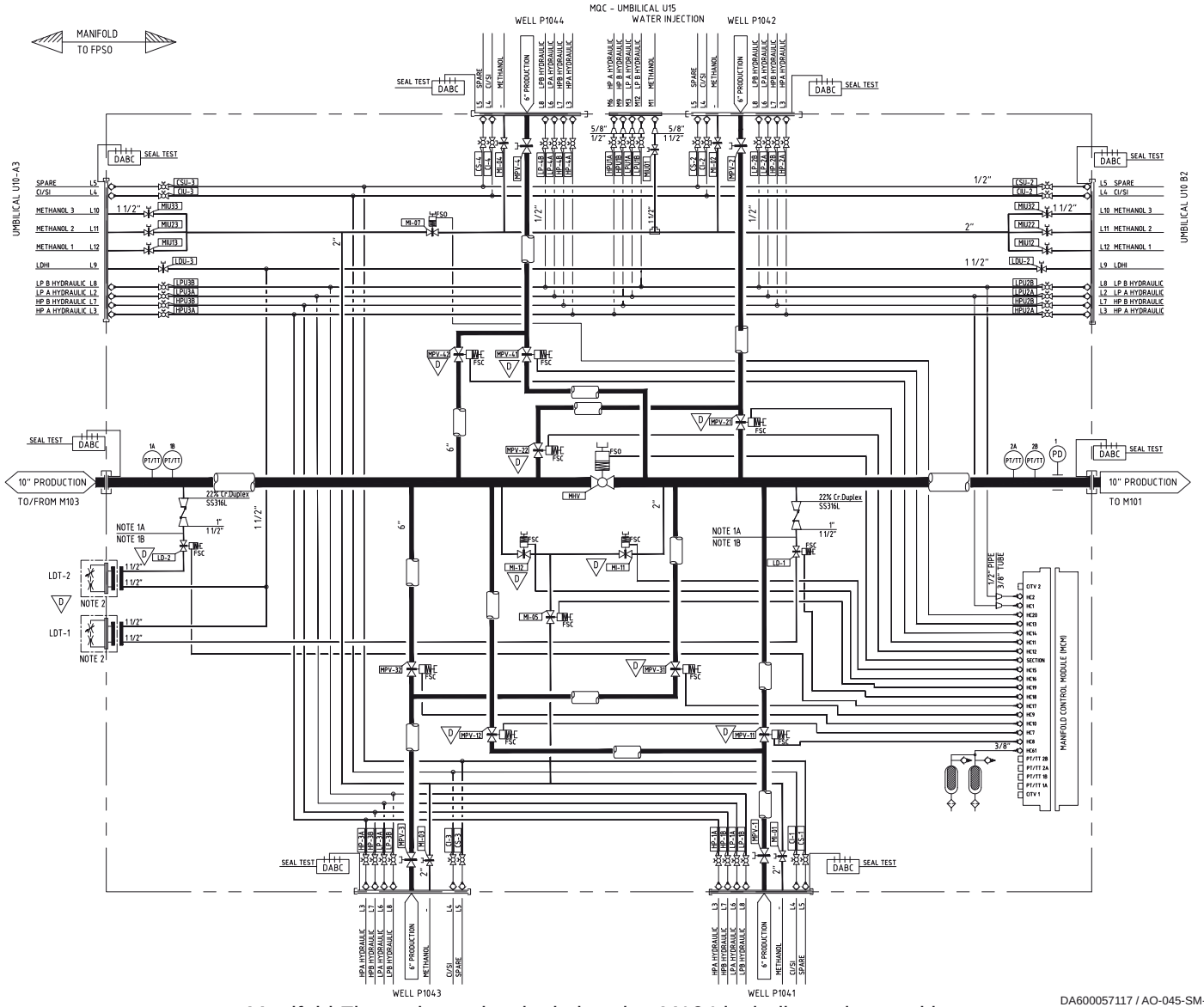

DA600057117 / AO-045-SM-2000-180042

Manifold Flow schematic, single header, M104 including valve marking

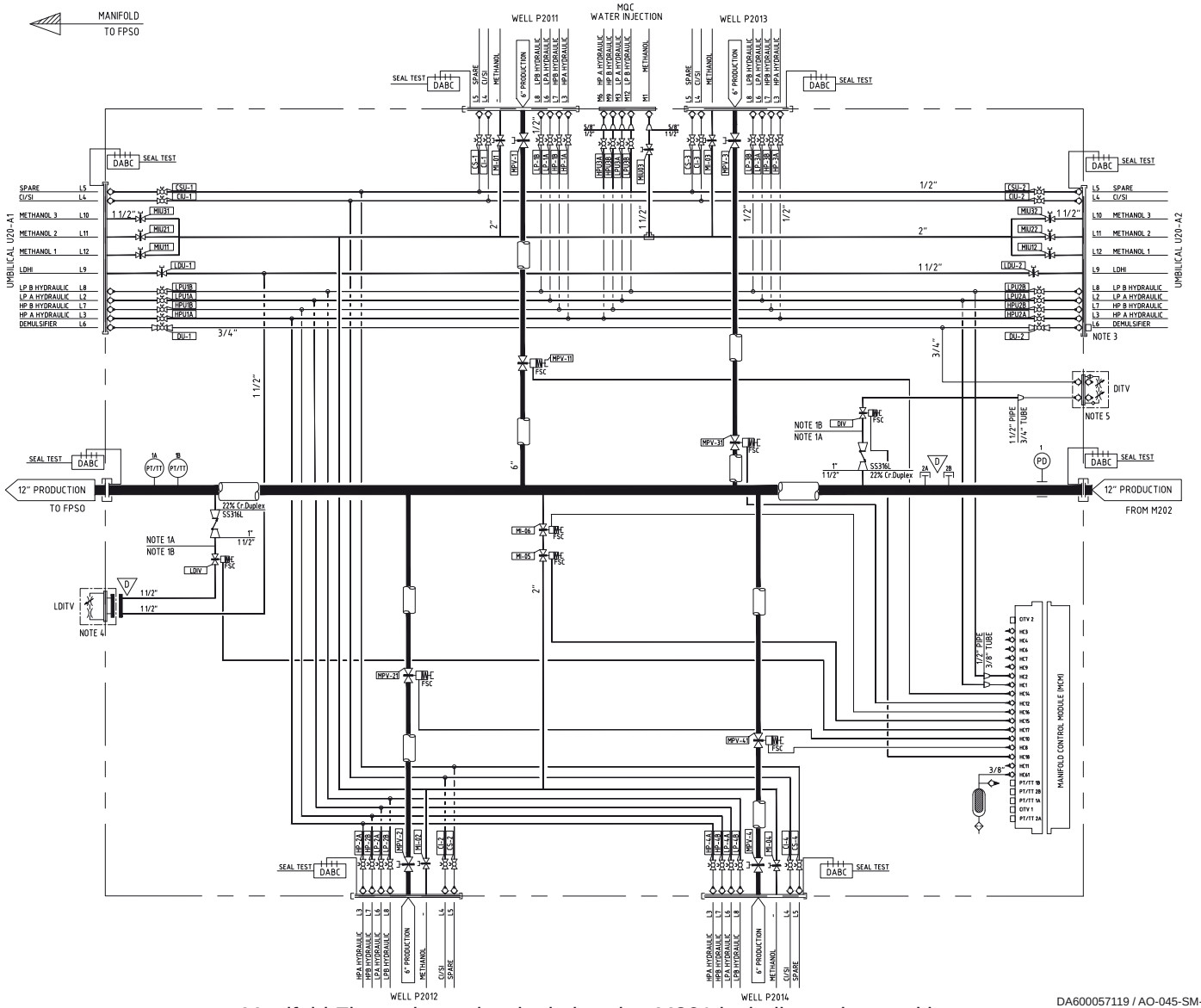

DA600057119 / AO-045-SM-2000-180047

Manifold Flow schematic, single header, M201 including valve marking

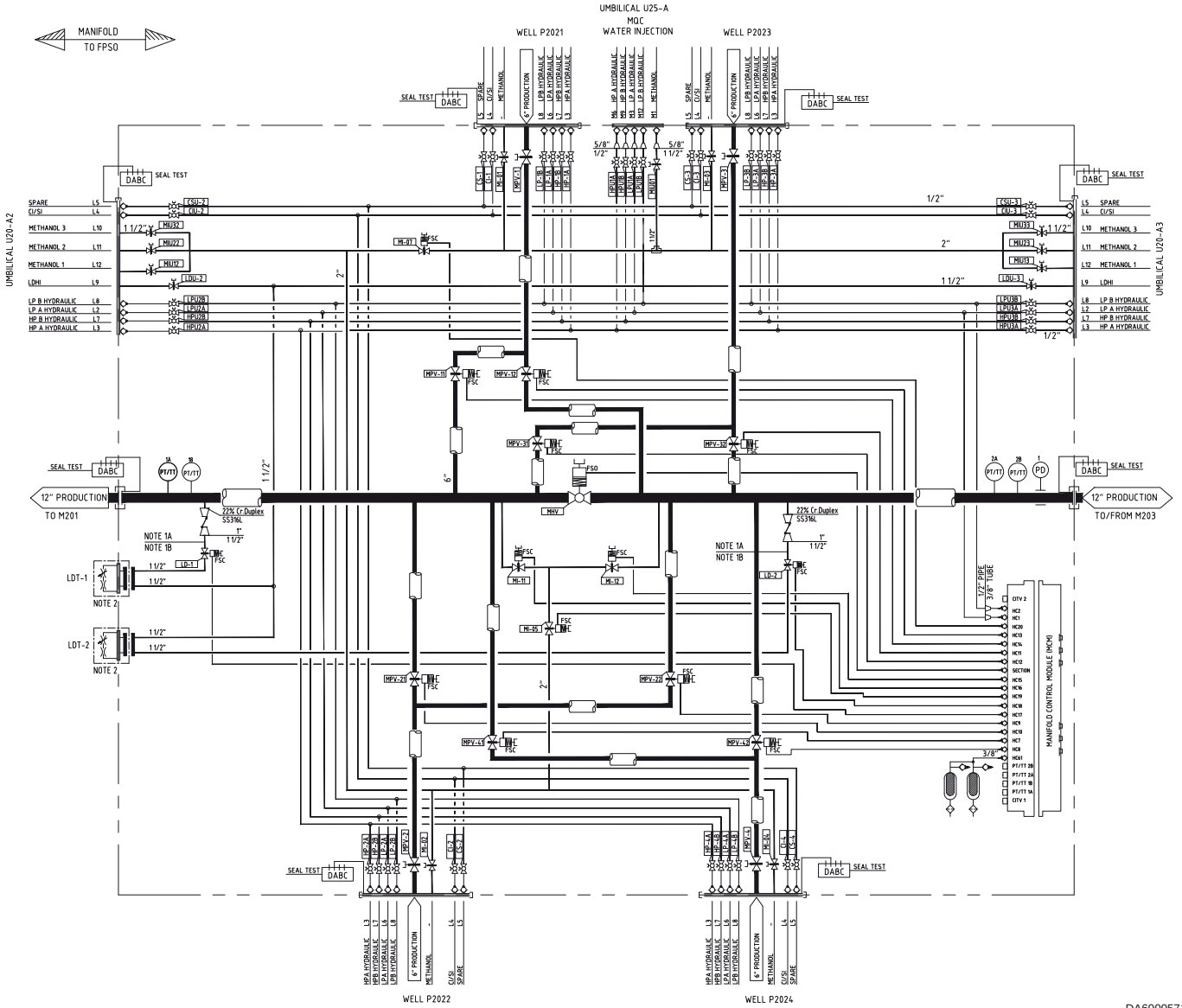

DA600057120 / AO-045-SM-2000-180054

Manifold Flow schematic, single header, M202 including valve marking

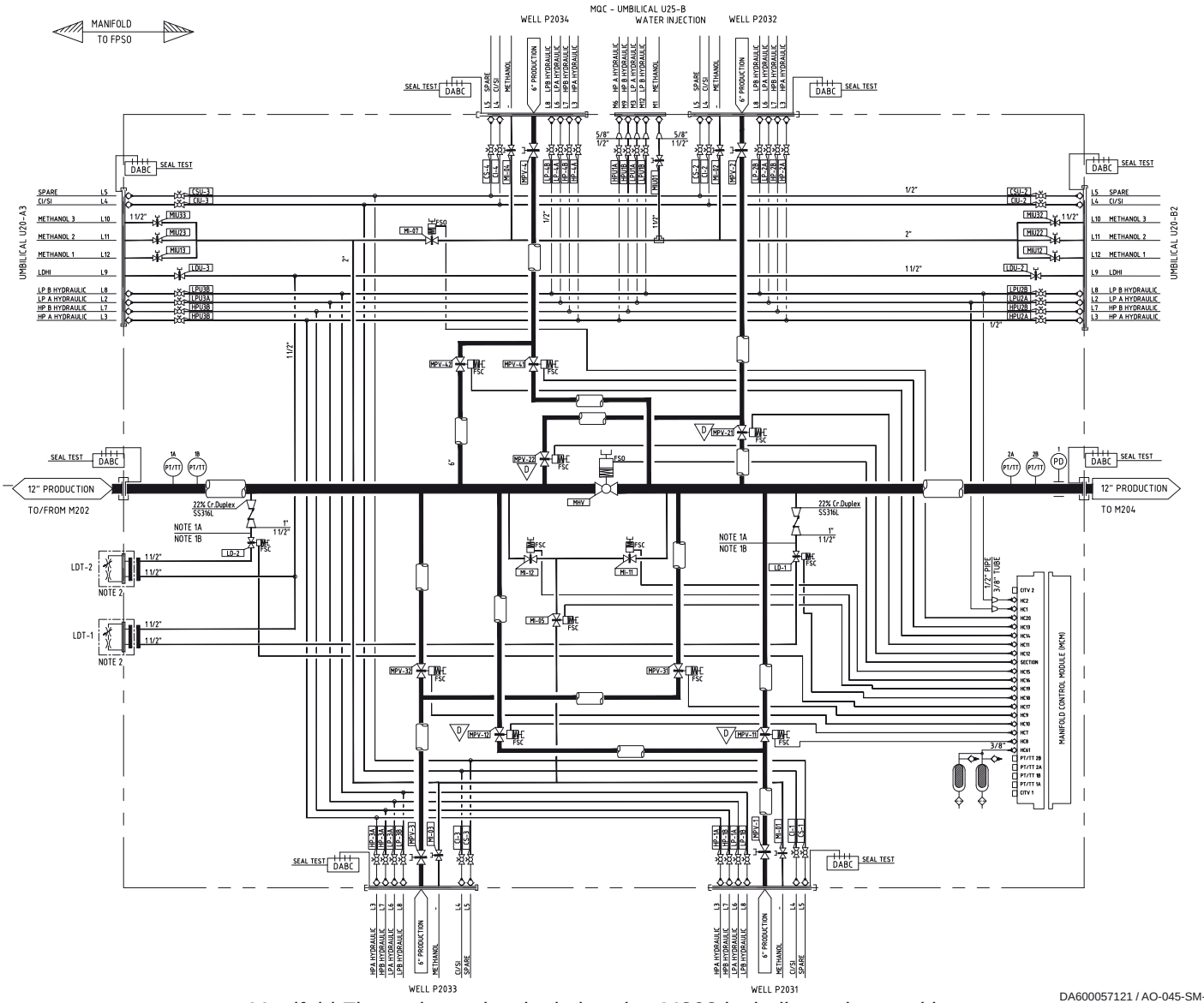

DA600057121 / AO-045-SM-2000-180059

Manifold Flow schematic, single header, M203 including valve marking

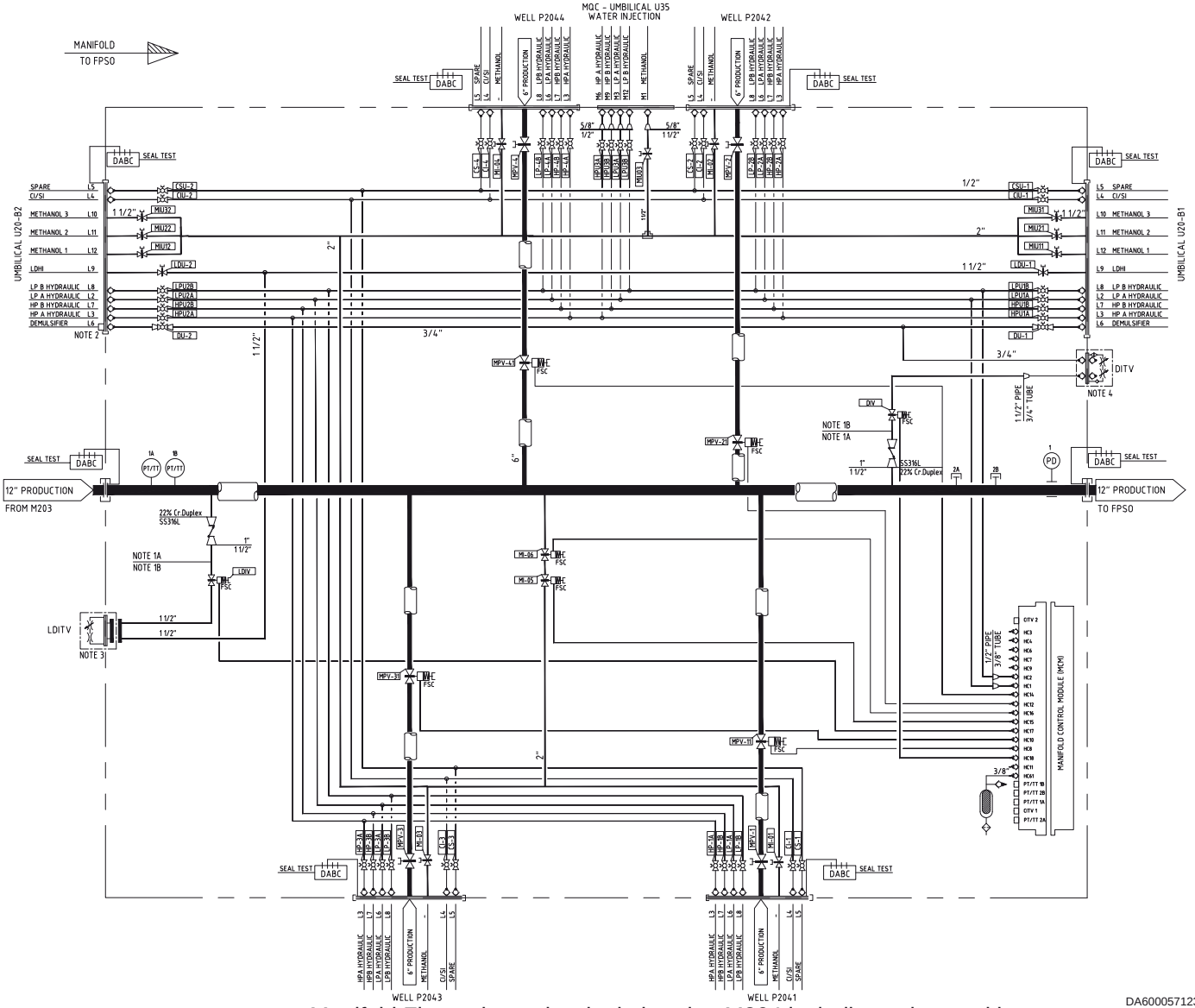

DA600057123 / AO-045-SM-2000-180064

Manifold Flow schematic, single header, M204 including valve marking

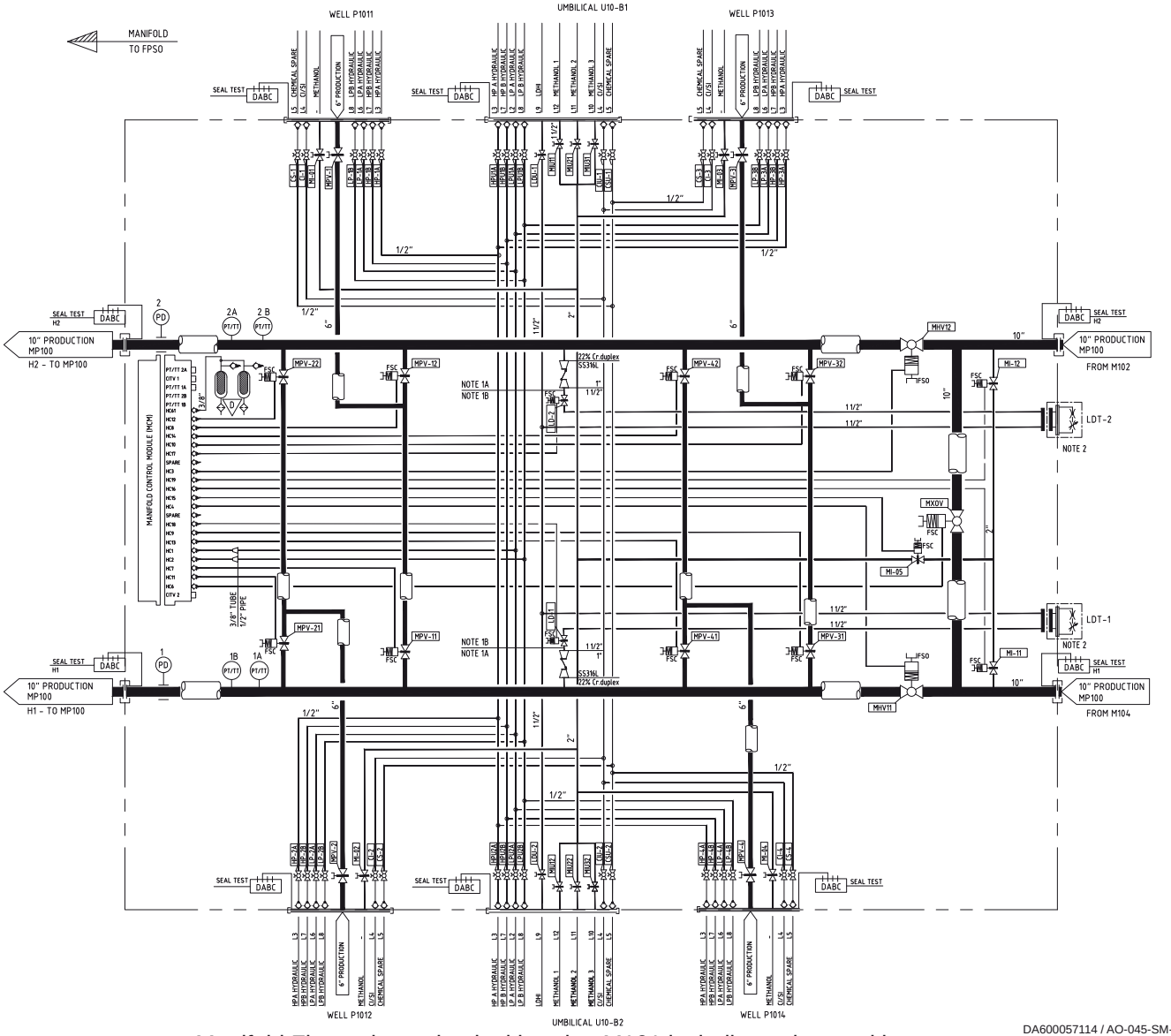

DA600057114 / AO-045-SM-2000-180024

Manifold Flow schematic, dual header, M101 including valve marking

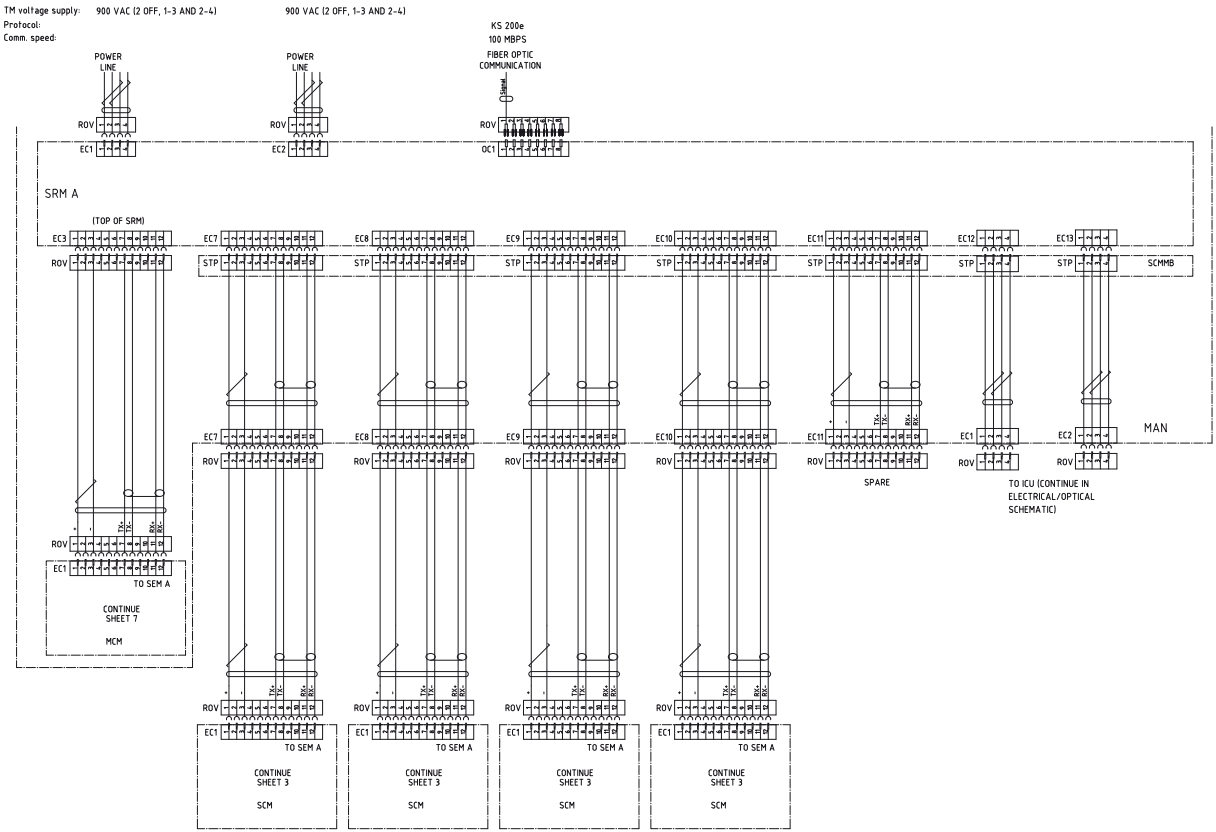

ABBREVIATIONS:

ASD	= ACOUSTIC SAND DETECTOR
APD	= ACOUSTIC PIG DETECTOR
CI/SI	= CORROSION INHIBITOR/SCALE INHIBITOR
CITV	= CHEMICAL INJECTION THROTTLE VALUE
DHPT	= DOWNHOLE PRESSURE AND TEMPERATURE
DIU	= DOWNHOLE INTERFACE UNIT
DIV	= DIVER
DPT	= DIFFERENTIAL PRESSURE TRANSMITTER
EC	= ELECTRICAL CONNECTOR
EFS	= ELECTRICAL FEEDTHROUGH SYSTEM
ICU	= INTEGRATED CONNECTION UNIT
IWIS	= INTELLIGENT WELL INTERFACE STANDARD
IWCM	= INTELLIGENT WELL CONTROL MODULE
LDHI	= LOW DOSAGE HYDRATE INHIBITOR
MAN	= MANIFOLD
MCM	= MANIFOLD CONTROL MODULE
MeOH	= METHANOL
MPFM	= MULTIPHASE FLOW METER
NAP	= NAPHTHENATE
LVDT	= LINEAR VARIABLE DIFFERENTIAL TRANSFORMER
OC	= OPTICAL CONNECTOR
PT	= PRESSURE TRANSMITTER
PT/TT	= PRESSURE AND TEMPERATURE TRANSMITTER
PXT	= PRODUCTION X-MAS TREE
ROV	= REMOTELY OPERATED VEHICLE
SCM	= SUBSEA CONTROL MODULE
SCMMB	= SUBSEA CONTROL MODULE MOUNTING BASE
SEM	= SUBSEA ELECTRONIC MODULE
SRM	= SUBSEA ROUTER MODULE
STP	= STAB PLATE
WIXT	= WATER INJECTION X-MAS TREE

LEGEND:

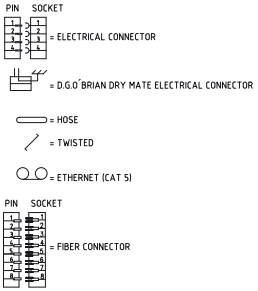

DA600057518 / AO-045-SG-2000-150014

SRM MKIII schematic

TM voltage supply:	900 VAC (2 OFF, 1-3 AND 2-4)	900 VAC (2 OFF, 1-3 AND 2-4)
Protocol:		KS 200e
Comm. speed:		100 MBPS

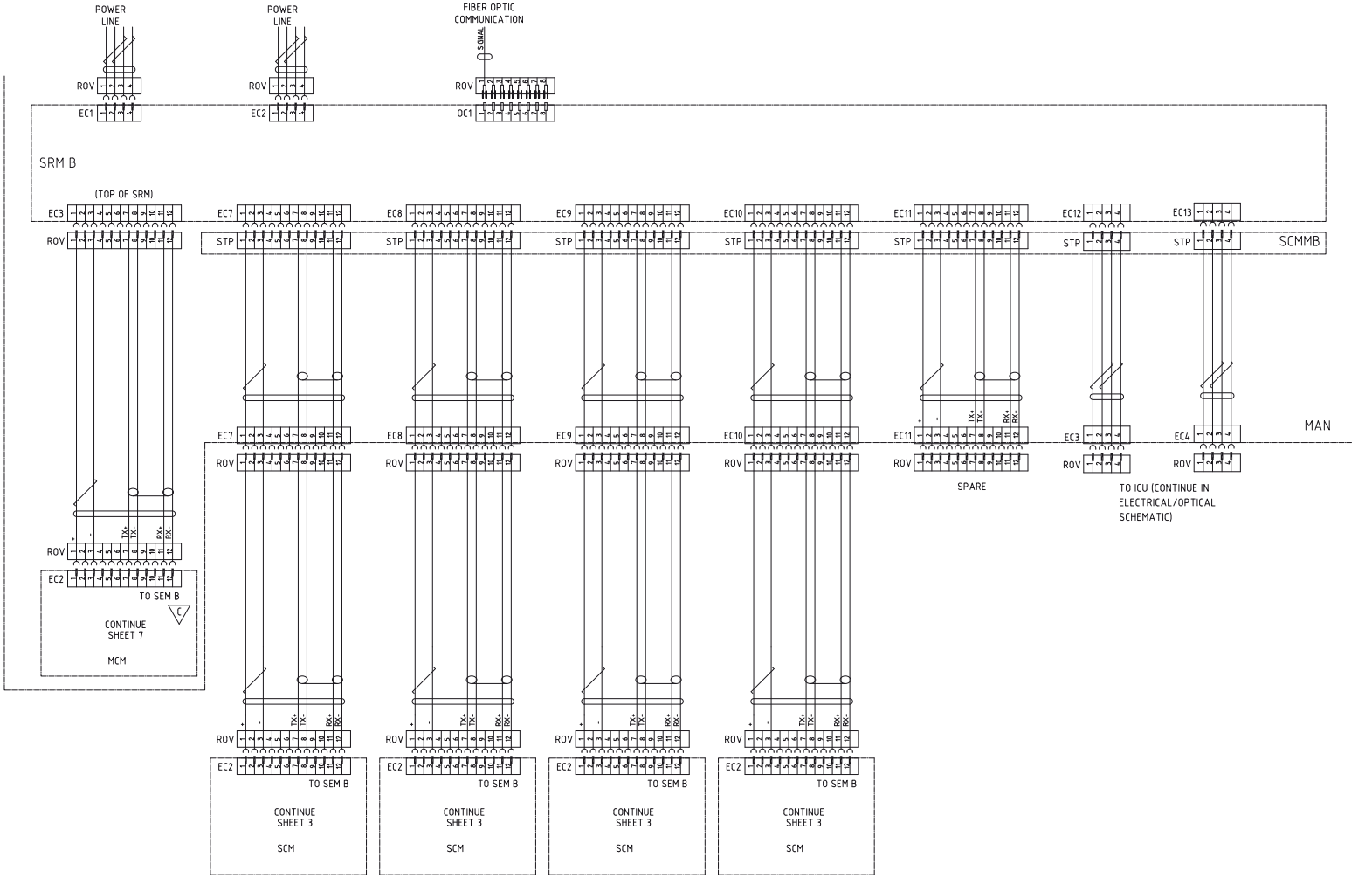

DA600057518 / AO-045-SG-2000-150014

SRM MKIII schematic

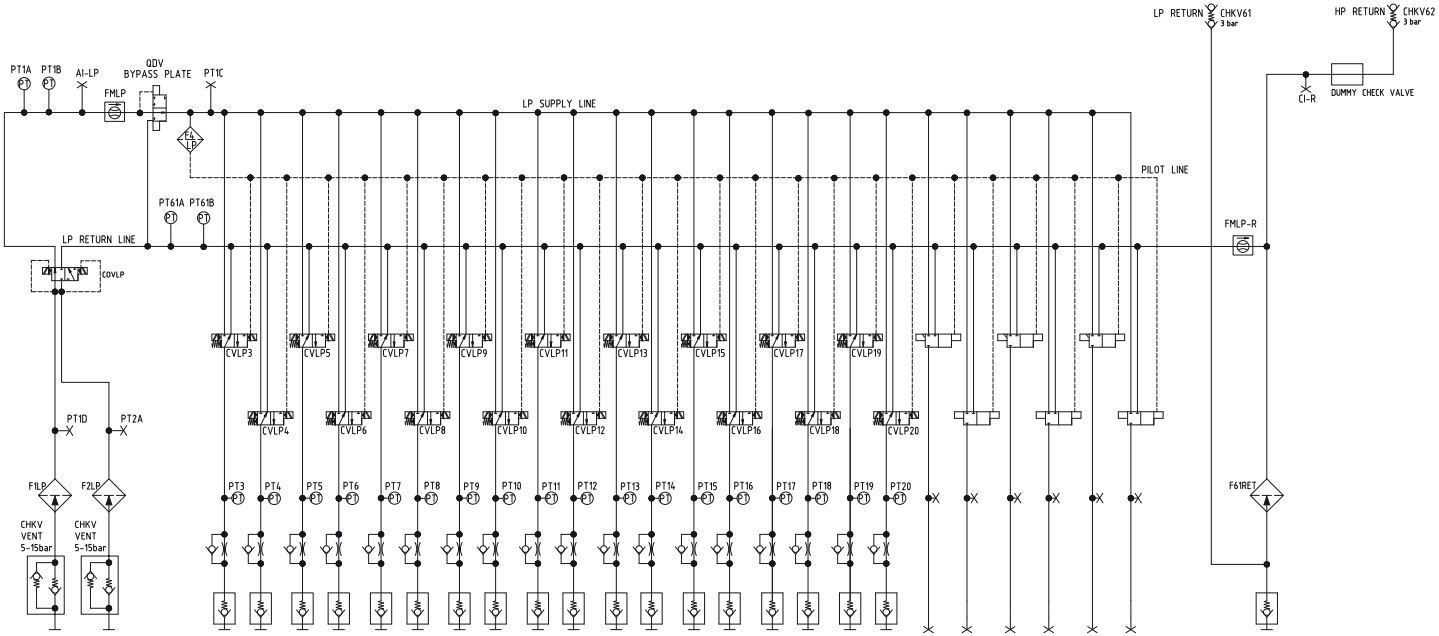

HYDR. LINES		HC1	HC2		HC3	HC4	HC5	HC6	HC7	HC8	HC9	HC10	HC11	HC12	HC13	HC14	HC15	HC16	HC17	HC18	HC19	HC20	HC21	HC22	HC23	HC24	HC25	HC26		HC61
W.P. (BAR):		314	314		314	314	314	314	314	314	314	314	314	314	314	314	314	314	314	314	314	314								50
FLOW RESTRICTOR (mm):					2 mm	2 mm	2 mm	2 mm	2 mm	2 mm	2 mm	2 mm	2 mm	2 mm	2 mm	2 mm	2 mm	2 mm	1 mm	1 mm	2 mm	2 mm								
MCM on M101:		LP 1	LP 2		MHV 12	MHV 11	NOTE 1	MXOV	MPV 11	MPV 12	MPV 31	MPV 32	MPV 21	MPV 22	MPV 41	MPV 42	MI 05	MI 11	LD 2	LD 1	MI 12	NOTE 1								RETURN
MCM on M202, M203 M102, M103, M104:		LP 1	LP 2		NOTE 1	MHV	NOTE 1	NOTE 1	MPV 41	MPV 42	MPV 22	MPV 21	MPV 32	MPV 31	MPV 12	MPV 11	MI 12	MI 11	LD 1	LD 2	MI 05	MI 07								RETURN
MCM on M201, M204.:		LP 1	LP 2		NOTE 1	NOTE 1	NOTE 1	NOTE 1	NOTE 1	MPV 41	NOTE 1	MPV 21	NOTE 1	MPV 31	NOTE 1	MPV 11	MI 05	MI 06	LDIV	DIV	NOTE 1	NOTE 1								RETURN
NOTE:		NOTE 2	COVLP 10K		NOTE 2	NOTE 2	NOTE 2	NOTE 2	NOTE 2	NOTE 2	NOTE 2	NOTE 2	NOTE 2	NOTE 2	NOTE 2	NOTE 2	NOTE 2	NOTE 2	NOTE 2	NOTE 2	NOTE 2	NOTE 2								

DA600057443 / AO-045-SG-2000-150017

MCM MKII Hydraulic schematic

NOTES

Module Running Tool – SCM MKII / MKIII

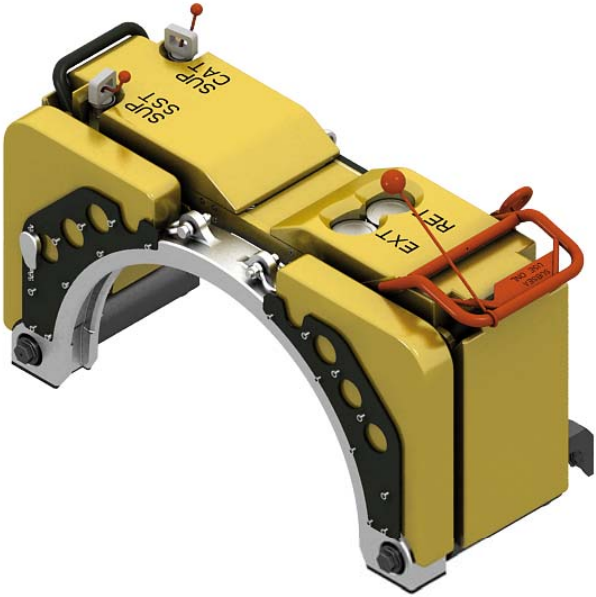

Connector Actuating Tool (CAT) insulated

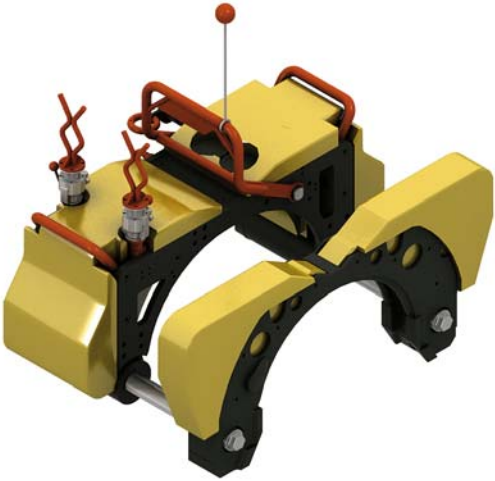

Connector Actuating Tool (CAT) non-insulated

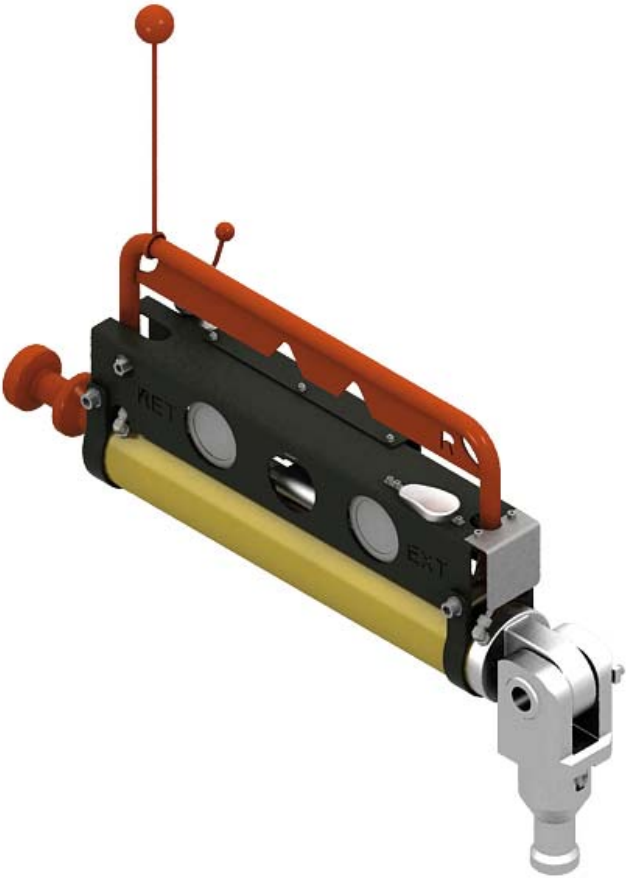

Sealine Stroking Tool (SST)

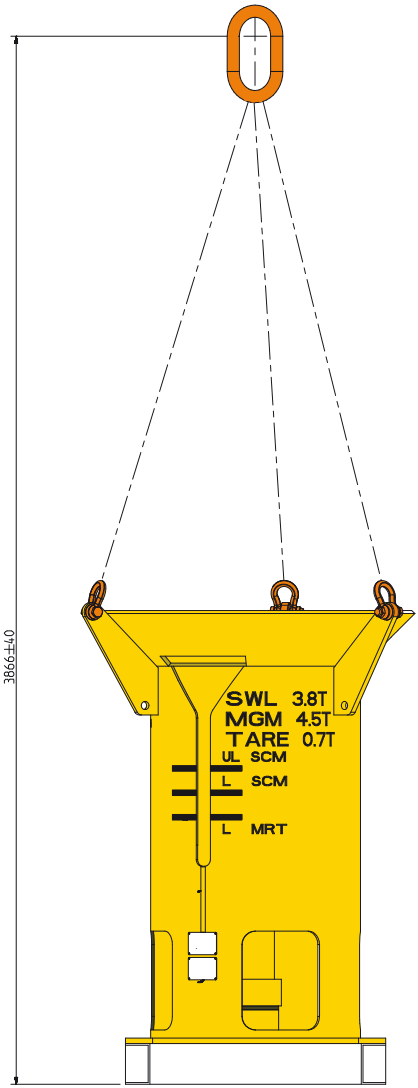

SCM Transport Skid

CAP OUTBOARD, HP ELASTOMER,
KC4-12, ID 1 1/2 + 1 1/2 +
1 1/2 + 1 1/2 + 8HL

CAP OUTBOARD, HP ELASTOMER,
KC4-12, ID 6+2+8HL

MQC-13 (MKII), OUTBOARD
SEAL CAP, F/ 5 L

CAP OUTBOARD, LP ELASTOMER,
KC4-12, ID 6

CAP OUTBOARD, LP ELASTOMER,
KC4-12, ID 11

CAP OUTBOARD, LP ELASTOMER,
KC4-12, ID 9

CAP INBOARD, HP METAL,
REINSTALLABLE,
KL4-12, ID 6 + 2 + 8HL

CAP INBOARD, HP METAL,
REINSTALLABLE,
KL4-12, ID 1 1/2 +1 1/2 +
1 1/2 +1 1/2 + 8HL

CAP INBOARD, LP ELASTOMER,
KC4-12, ID 6”

CAP INBOARD, LP ELASTOMER,
KC4-12, ID 9”

CAP INBOARD, LP ELASTOMER,
KC4-12, ID 6” + 2” + 8HL

CAP INBOARD, LP ELASTOMER,
KC4-12, ID 11”

CAP INBOARD, LP ELASTOMER,
KC4-12, ID 1 1/2 + 1 1/2 +
1 1/2 + 1 1/2 + 8HL

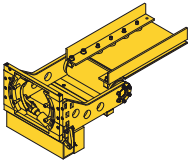

FLYING LEAD ORIENTATION TOOL
100036811

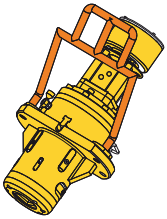

TORQUE TOOL,
API 17D CLASS 1-4(2700nm)
100035992

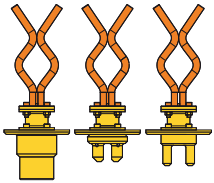

TORQUE ADAPTER KIT
100012558

TH WASHOUT LANCE
W/EJECTOR
P6000012750

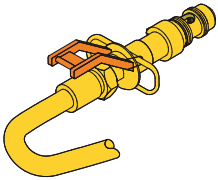

SUCTION KIT
7601166

STAB 4L, RECEPTACLE
CLEANING UNIT
1000053853

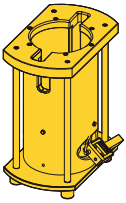

TORQUE TOOL, GEAR BOX
TEST JIG, ISO 13628-8 CLASS 4-6
P6000015062

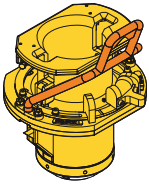

TORQUE TOOL,
GEAR BOX CLASS 4-5
P6000052092

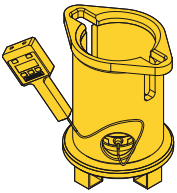

TORQUE TOOL,
TEST JIG CL 4-5
P6000023065

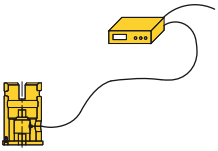

CALIBRATION TEST JIG
FOR TORQUE TOOL
7600544

HUB INSPECTION CAMERA
MK 2 (HIC)
P6000046966

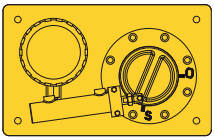

EXTERNAL SEAL TEST KIT
P6000039162

ROV Tools

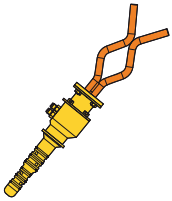

STAB 4 L, 345 BAR, MALE
100002110

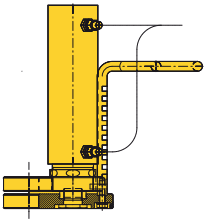

OVERRIDE JACK UNIVERSAL 2
7601169
OVERIDE JACK, TH ORIENTATION PIN
P600105162

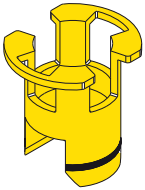

CAP, ROTAR TORQUE RECEPTACLE.
ISO13628-8 CLASS5, GEARBOX
ADAPTER
P6000080006

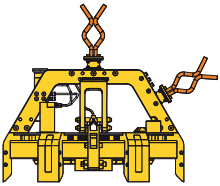

WELLHEAD CLEANING TOOL
VX18 3/4”
P6000032617

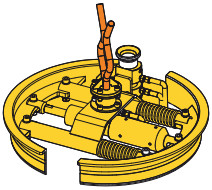

SEAL REPLACEMENT TOOL,
VX 18 3/4”
P6000011921

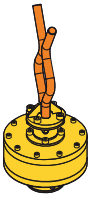

TORQUE, CLUTCH 80NM
P6000035928

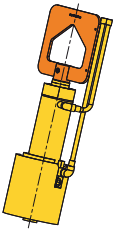

SCM OVERRIDE TOOL, MK II
100029631

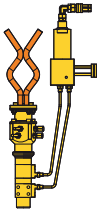

MRT SOFT LANDING
EXTENSION KIT
100030589

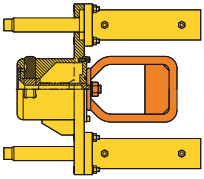

OVERRIDE JACK, MQC, MK2
7604322

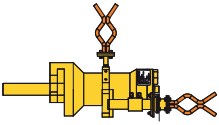

LAOT 2” - 5”
100040011

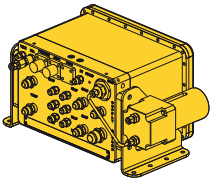

REMOTE CONTROL UNIT, MK2 (RCU)
(FOR TORQUE TOOL)
100035993

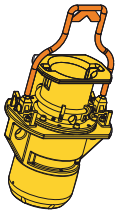

TORQUE TOOL, GEAR BOX
ISO13628-8 CLASS4-6
P6000015059

ROV Tools

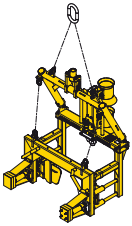

RUNNING TOOL, HP CAP
UCON H-12, P6000063035
SHOWN WITHOUT GUIDEARMS
GUIDE ARM SINGLE, P6000099759
GUIDE ARM DUAL, P6000100372

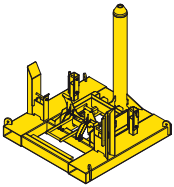

TRANSPORT SKID, HP CAP RUNNING TOOL, P6000064655

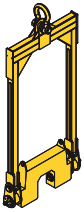

LIFTING YOKE, FSLT-UH4-12
(FOR FLEXIBLE), P6000065177
SHORT FOR SURFACE HANDLING,
P6000096441

HYDRAULIC JUMPER
4L / 6L / 4L W/ INTENSIFIER
UCON-H
P6000064512 / P6000064511/ P6000064510

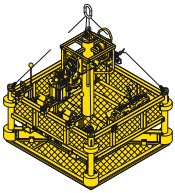

BASKET, ROV TOOL F/ MULTI
PURPOSE, GENERAL TOOLS
P6000099596

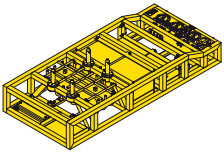

HPU EXTENSION SKID
ROV MOUNTED F/ XT ON WIRE AND
TREE CAP INSTALLATION, P6000109534

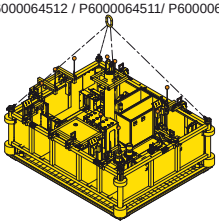

ROV BASKET, MULTI PURPOSE
UCON W/ MUDMAT
P6000064658

LIFTING TOOL, RSLT-UH4-12
(FOR RIGID SPOOL)
P6000068030

GUIDE POST, INTERVENTION
UCON-H ROV LIGHT WEIGHT 1,5M
P6000065075

GUIDE POST, INTERVENTION
UCON-H, 3,6M/4,5M
P6000068845/P6000073309

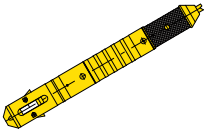

WEPCO GUIDE WIRE ANCHOR
SWL 4T,ACC. VMO
100017933

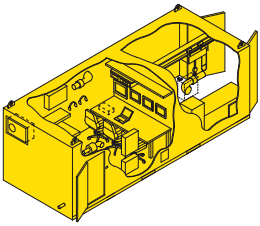

STORAGE CONTAINER
FOR ROV TOOLS
P6000069509

ROV Tools

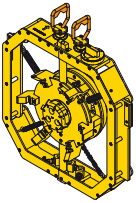

HUB CLEANING TOOL, HCT-UH4-12
P6000065127

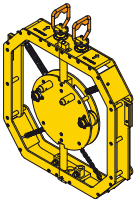

SEAL REPLACEMENT TOOL
SRT-UH4-12, INB. MULTIBORE
P6000062938

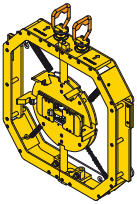

SEAL REPLACEMENT TOOL
SRT-UH4-12,INB. MONOBORE
P6000062936

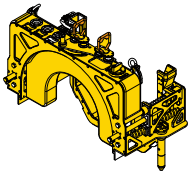

TOOL INTERFACE FRAME
TIF-UH4-12, P6000062939
TEST TOOL TIF/HCT/SRT
P6000083004

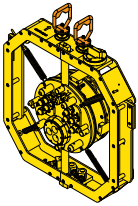

HUB CLEANING TOOL
UCON-H-12
P6000068735

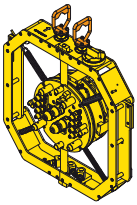

HUB CLEANING TOOL
UCON-H-12, INBOARD MULTIBORE
P6000068734

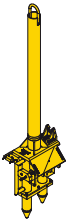

SPOOL LANDING, DUMMY HUB
GUIDEPOST 3M / 1,5M
P6000107107 / P6000105477
DUMMY HUB SKID P6000107974

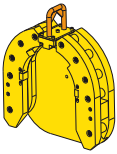

CAP UCON-H-12, INBOARD
PROTECTION KC4-12, P6000097754
CAP, INB. PROTECTION, KC4-12, P6000076067
(GERERAL USE FOR CONTINGENCY)

REINSTALLABLE GRABBER
POST 2M
P6000073163

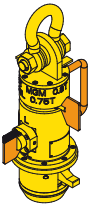

LATCH LIFTING TOOL
API 17D CL. 1-4
P6000060089

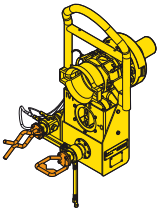

ROV DOCKING FIXTURE
MQC MK2 ADAPTER W/STAB 4L
P6000073644

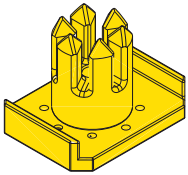

TORQUE TOOL, ADAPTER KIT
BENTLEY XT VALVES
P6000102511

ROV Tools

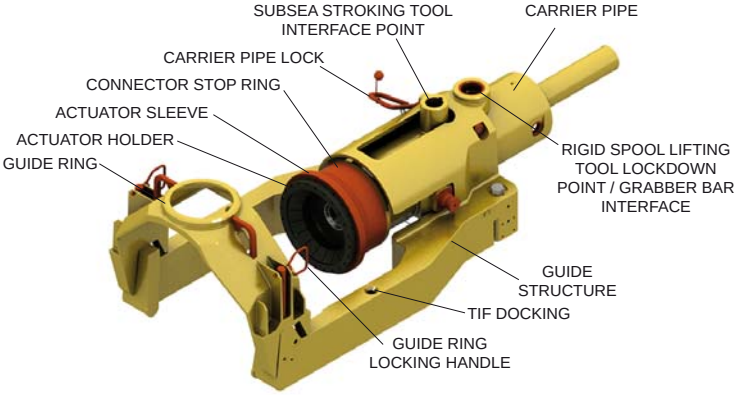

Termination Head - ID6

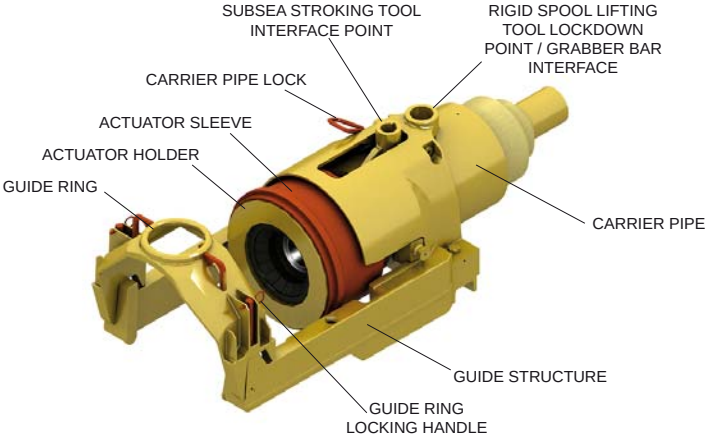

Termination Head - ID9

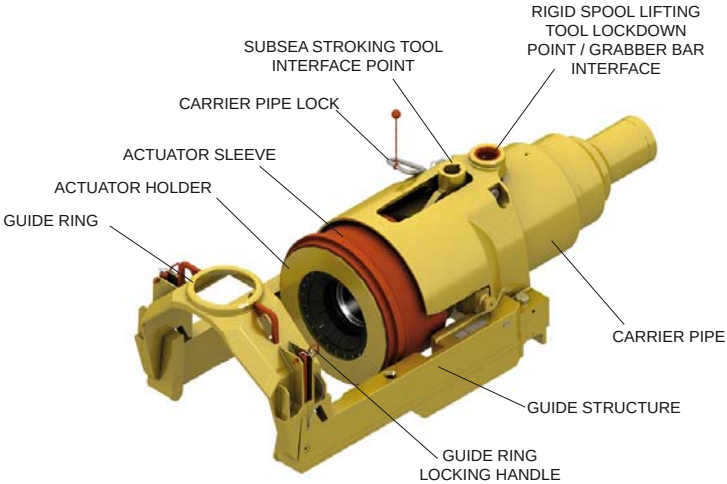

Termination Head - ID11

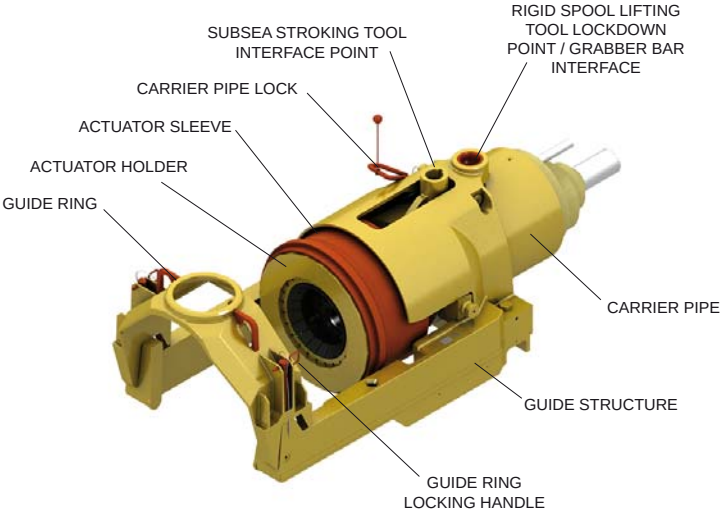

Termination Head - ID6+2+8HL

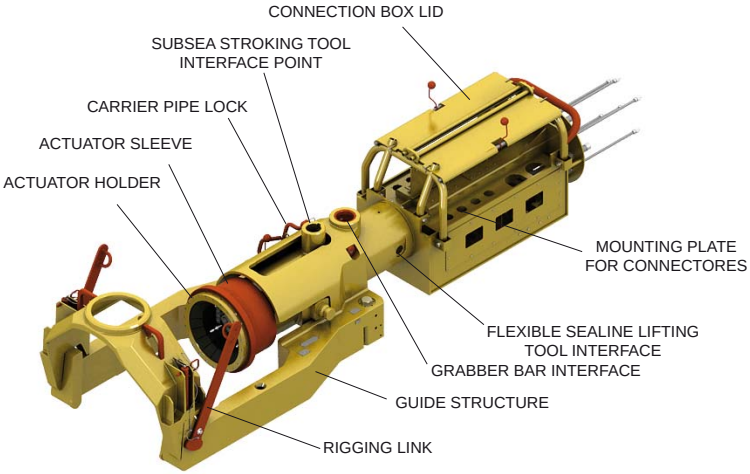

Termination Head - Umbilical, static, direct routed

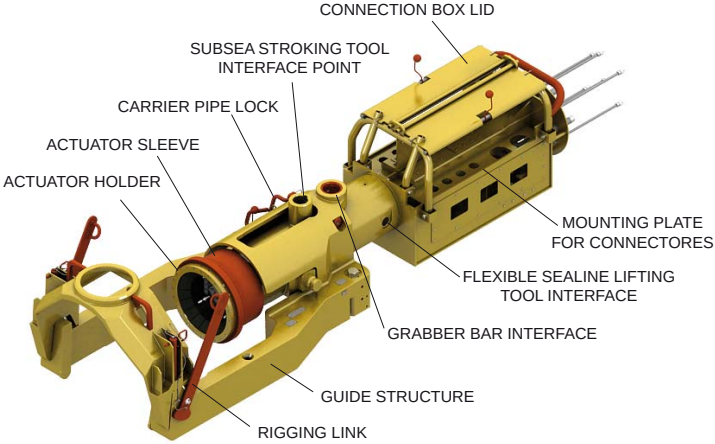

Termination Head - Umbilical, static, reversed routed

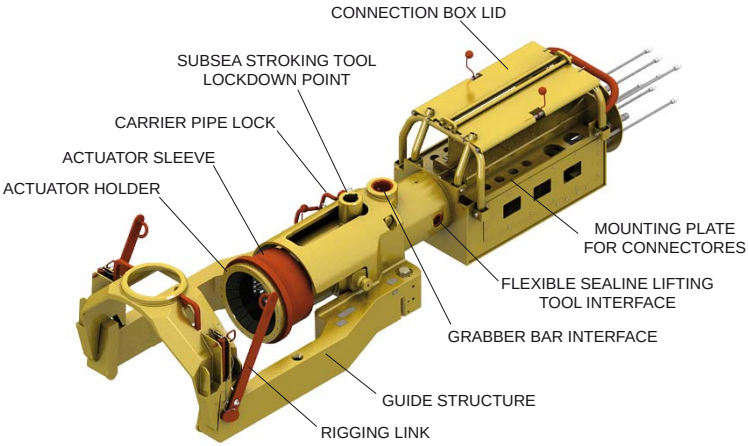

Termination Head - Umbilical, dynamic

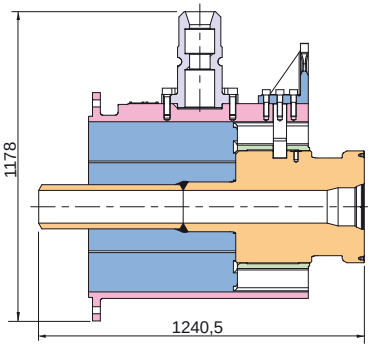

HUB INBOARD, KC4-12, ID 6, UCON-H-12, ASSY, XT

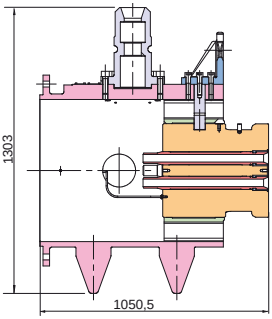

HUB INBOARD, KC4-12, ID 1 1/2 + 1 1/2 + 1 1/2 + 1 1/2 + 8HL, UCON-H-12, ASSY

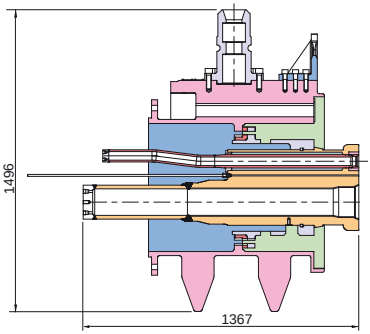

HUB INBOARD, KC4-12, ID 6 + 2 + 8HL, UCON-H-12, INSULATED, ASSY, MANIFOLD

Hubs

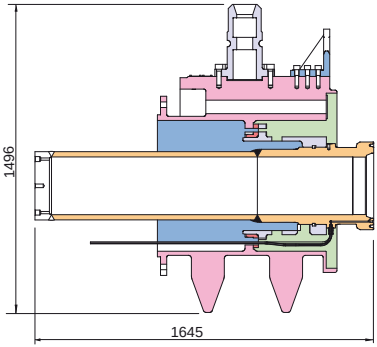

HUB INBOARD, KC4-12, ID 11, UCON-H-12, INSULATED, ASSY

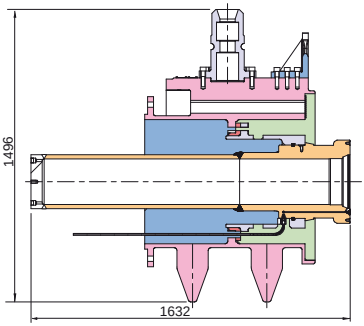

HUB INBOARD, KC4-12, ID 9, UCON-H-12, INSULATED, ASSY

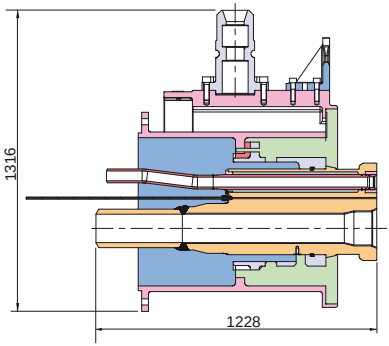

HUB INBOARD, KC4-12, ID 6 + 2 + 8HL, UCON-H-12, INSULATED TX, ASSY

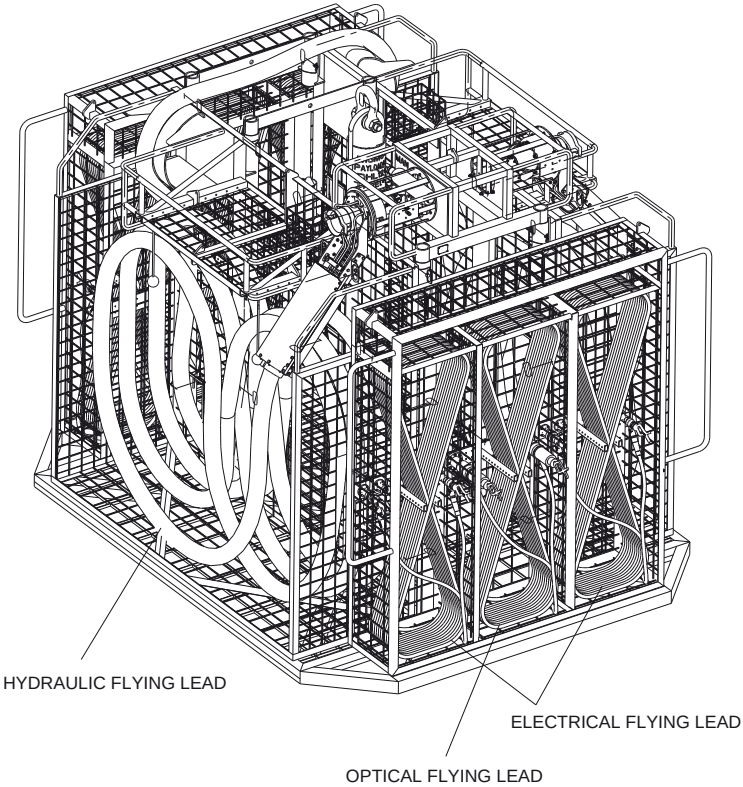

Basket for Flying Leads

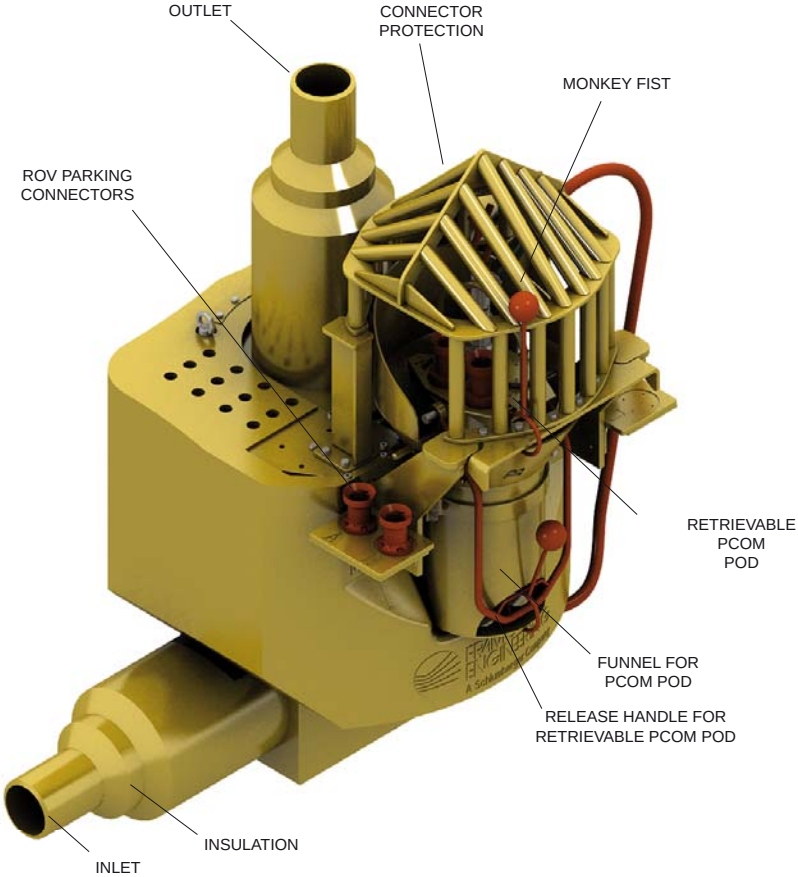
OUTLET
CONNECTOR PROTECTION
MONKEY FIST
ROV PARKING CONNECTORS
RETRIEVABLE PCOM POD
FUNNEL FOR PCOM POD
RELEASE HANDLE FOR RETRIEVABLE PCOM POD
INSULATION
INLET

MPFM

12. Tables

Description	FMC P/N	Width (mm)	Length (mm)	Height (mm)	Weight (kg)
Topside Electrical Equipment					
SCU 200, PANEL, SUBSEA WELLS CONTROL CABINET NO.1	P6000068272	800	800	2100	250
SCU 200, PANEL, SUBSEA WELLS CONTROL CABINET NO.2	P6000088400	800	800	2100	250
SCU 200, PANEL, HPU CONTROL CABINET	P6000074969	800	800	2100	250
SCU NETWORK AND WORKSTATION CABINET, CLOV	P6000075576	800	800	2100	250
SPCU 200E, 1 X 8 LINES (SPCU-U10-A1-A1 / SPCU-U10-B1-B1)	P6000073682	806	835	2163	800
SPCU 200E, 1 X 8 LINES (SPCU-U10-A1-A2 / SPCU-U10-B1-B2)	P6000082436	806	835	2163	800
SPCU 200E, 1 X 8 LINES (SPCU-U20-A1-A1 / SPCU-U20-B1-B1)	P6000082437	806	835	2163	800
SPCU 200E, 1 X 8 LINES (SPCU- U20-A1-A2 / SPCU-U20-B1-B2)	P6000082438	806	835	2163	800
SDPU, CABINET, CLOV	P6000084001	808	1008	2112	250
Topside Electrical Test Equipment					
SPCTU 200, E, 620VAC	P6000094116	600	950	850	130
SPCTU 200, E, 900VAC	P6000076890	575	930	800	130
SPCTU 200, E, 690VAC	P6000069203	575	930	800	130
SMART TOOL 200, LAPTOP INCL. TRANSPORTATION BOX	P6000051562	400	600	400	25
Topside Hydraulic Equipment					
Production HPU	P6000071573	9000	3000	3600	28500
HYDRAULIC TEST PANEL, PRODUCTION UMB.	P6000073040	830	400	1893	190
HYDRAULIC TEST PANEL, SIV UMB.	P6000073675	500	400	1893	130
HYDRAULIC TEST PANEL, MPP UMB.	P6000073677	1050	400	1893	250
TEST & FLUSHING HPU - TFHPU	P6000070655	1500	1500	2402	1950
SCM/MCM/SRM Equipment					
SCM MK II, 620, PROD XT	P6000068902	Ø 700		1900	1400
SCM MK III, 620, INJ XT	P6000068912	Ø 855		2002	1800
SCM MK II, 620, MANIFOLD	P6000068918	Ø 700		1900	1400
SRM MK III, 620	P6000068924	Ø 855		2002	1800
TEST STAND ASSY, F/ SCM, MKII/MKIII	P6000068776	2000	2400	2100	1350
MODULE RUNNING TOOL / SCM, SKID, ASSY, SCM 150/E200 EXT.MECH.	100048881	1280	1315	1748	669
TRANSPORTATION SKID, FOR MRT / SCM MK III, EXTENDED LOCKING MECHANISM	100028733	1477	1442	1837	846
SCMMB MK II, TEST & FLUSHING PLATE	P6000068754	Ø 700		2500	500
SCMMB MK III, TEST & FLUSHING PLATE	P6000068931	Ø 852		1645	537
Subsea Distribution Test Equipment					
MQC-13 MK II, OUTBOARD PLATE, F/ TEST AND FLUSHING, 5 LINES	P6000074231	Ø 280		482	40
MQC-13 MK II, OUTBOARD PLATE, F/ TESTING, MAX TP 1140 BAR	P6000076298	Ø 281		482	40
CHEMICAL INJECTION VALVE (CIV), FLUSHING CAP, ROXAR, RETRIEVABLE DOCKING CANISTER SINGLE HIGH, 690 BAR	P6000073212	Ø 248	311	1500	110
CHEMICAL INJECTION VALVE (CIV), FLUSHING CAP, SKOFLO, RETRIEVABLE DOCKIN G CANISTER SINGLE LOW, 690 BAR	P6000072808	Ø 254	338	1083	65

Component Dimensions and Weight

Description	FMC P/N	Width (mm)	Length (mm)	Height (mm)	Weight (kg)
Wellhead system					
UWD-15, CONDUCTOR HSG WELDMENT, 36” W/ VETCO GR AY CONNECTOR	P2000014890	Ø 946	13005		14928
UWD-15, CONDUCTOR HSG WELDMENT, 36”, W/GRANT PRIDECO VIPER CONNECTOR	P2000039572	Ø 946	12982		14789
UWD-15, WELLHEAD HSG, 18-3/4”-15K H4 PROFILE (Heavy Architecture)	P2000014888	Ø 802	7992		5177
UWD-15, WELLHEAD HSG W/ EXT & CONN, 18 3/4”-15K, H4 PROFILE (Light Architecture)	P2000024546	Ø 803	8720		5207
UWD-15, CASING HANGER ASSY W/ PUP JT, 18 3/4” X 14”	P2000024075	Ø 471	6441		922
UWD, CASING HANGER ASSY W/ PUP JT, 18 3/4” X 10 3/4”	P2000024078	Ø 471	2597		390
UWD-15, CASING HANGER SPACER SLEEVE, 18 3/4” X 10 3/4”, 9 5/8”, SPACER SLEE VE ASSEMBLY	P2000024093	Ø 471	534		281
UWD-15 ALTERNATE PACKOFF ASSY, 18 3/4 TO FIT ALL CSG HGRS 13 3/8 & 10 3/ 4 & 9 5/8 & 7 5/8 & 7,ARR/WITH LOCKDOWN SEGMENTS	P205871	Ø 471	286		60
UWD-15 M2M ANNULUS SEAL ASSY, F/ 18 3/4” WELLHEAD SYSTEM, ARR/WITH LOCKDOWN SEGMENTS AND CAGED ENERGISING MANDREL	P205799	Ø 471	299		56
WH system Handling Equipment					
FABRICATION ASSY, WELLHEAD TOOLS CONTAINER, EXTENDED HEIGHT	P2000011121	2945	2469	3157	6383
SHIPPING BASKET ASSY, F/ WELLHEAD HOUSING, WITH RUNNING TOOL INSTALLED C /W EXTENSION JOINT AND CONNECTOR OR CASING HANGER ASSEMBLY WITH RUNNING TOOL INSTALLED C/W EXTEN-SION JOINT. INCLUDES SLING SET.	P2000005531	1200	10500	1335	4100
SHIPPING CONTAINER ASSY, F/ DRILL AHEAD TOOL	P2000028776	2427	1370	2072	2846
UWD, F/ 18 3/4“ WELLHEAD HOUSING TOOL, F/ HANDLING RAW AND H4 PROFILE F/SHOP USE ONLY	P1000071181	Ø 965	520		632
LIFTING SUB, 6 5/8 API REG BOTTOM	18-222-275	Ø 196	356		39
WH system Installation Equipment					
UWD-15 ANNULAR TOOL KIT ASSEMBLY (I.E. DEBRIS CLEANOUT TOOL, ANNULAR IMPRESSION TOOL & ANNU-LAR MILLING TOOL).	P201134-0021	Ø 471	1642		323
UWD-15, WEAR BUSHING ASSY, 18 3/4” X 14”, MIN BORE, 12.689”	P2000010846	Ø 172	1224		581
UWD-15, WEAR BUSHING ASSY, 18 3/4” X 10 3/4” W/9.960” MIN BORE	DP-18-4774	Ø 471	923		538
UWD-15, BORE PROTECTOR ASSY, 18 3/4 NOMINAL BORE	18-909-066	Ø 471	1221		155
TEMPORARY ABANDONMENT CAP ASSY, 18 3/4” H4 PRO-FILE, ROV STYLE, ROV RUN &RETRIEVED, W/ FKS-K 4L HOT STAB RECEPTACLE, PLUMBED F/ LIGHT WEIGHT FLUI D	P2000002521	Ø 951		1446	85
TEMPORARY ABANDONMENT CAP ASSY, 18 3/4” H4 PRO-FILE, ROV STYLE, TRASH CAP	P144423	Ø 848		815	54
UWD, ASSY, 30/36” FALSE ROTARY TABLE TOOL	P114944-0019	Ø 991		178	543
UWD, ASSY, F/ 18 3/4 LEAD IMPRESSION TOOL, WITH WASHOUT	P2000007972	Ø 473	3984		1656
UWD, WASH OUT TOOL, F/ MUD OR BRINE	DP-48-5075	Ø 172	2205		275
SUPPORT PLATE ASSY, F/ CONDUCTOR HOUSING, 36IN HANG-OFF PLATE	P2000005301	Ø 1256		182	209
UWD ASSEMBLY, 18 3/4 IN WELLHEAD FALSE ROTARY TABLE	P114942-0019	Ø 719		190	194

Component Dimensions and Weight

Description	FMC P/N	Width (mm)	Length (mm)	Height (mm)	Weight (kg)
UWD, ASSY, F/ 18 3/4” HANG OFF PLATE TOOL	P2000009684	Ø 1461		277	1555
UWD-15, BORE PROTECTOR ASSY, 18 3/4 W/ 12.640 MIN BORE	P215873	Ø 472	1226		659
UWD-15, HOLD DOWN RING, F/ 30 DRILL AHEAD TOOL, ROT INTERFACE PLATE	P2000009538	Ø 737		83	103
UWD-15, WEAR BUSHING ASSY, 18 3/4” W/ 12.689 INCH MIN BORE, F/USE W/14 IN CASING HANGER	P2000000631	Ø 471	963		616
WH system Running Tool					
UWD-15, ASSY, F/ 18 3/4” WELLHEAD HOUSING RUNNING TOOL	DP-18-3540	Ø 472	1651		980
UWD-15, ASSY, 30/36” DRILL AHEAD TOOL, W/ CONTINGENCY RELEASE, 10 INCH BORE INNER SLEEVE	P2000017963	Ø 750	2600		3291
UWD-15, ASSY, F/ 18 3/4” SPRING LOADED TOOL, 14” HEAVY WALL BORE PROTECTOR RUNNING KIT	P215881	Ø 452	445		382
UWD-15, SINGLE TRIP TOOL ASSY W/ WASHOUT FACILITY	P206128	Ø 471	2095		890
UWD-15, 18 3/4” SPRING LOADED TOOL	18-920-138	Ø 470	1060		588
UWD-15, ASSY, F/ 18 3/4 ANNULUS SEAL ASSY RUNNING TOOL, (ASART)	P205896	Ø 471	1575		658
UWD-15, 18 3/4” CEMENT CLEAN OUT TOOL	18-922-059	Ø 471	739		431
30 WELLHEAD HOUSING CAM STYLE MANUAL RUNNING TOOL ASSY, W/ SEAL RING ASSY	P202044-0021	Ø 743	1575		1860
UWD-15, 18 3/4 WELLHEAD HOUSING RUNNING TOOL STOP RING	18-910-219	Ø 597	107		69
Tubing Hanger System					
TUBING HANGER ASSY, DUAL BORE, 5” X 2”-10K (Production)	P2000014921	Ø 628	2609		964
TUBING HANGER ASSY, DUAL BORE, 5” X 2”-10K (WI)	P2000014928	Ø 628	2609		962
Tubing Hanger, Test/ Handling/ Installation Equipment					
TUBING HANGER RUNNING/RETRIEVAL TOOL ASSY,	P2000024242	Ø 500	1556		1252
TUBING HANGER MECHANICAL RETRIEVAL TOOL ASSY	P2000035501	Ø 473	2216		2863
TUBING HANGER ORIENTATION JOINT ASSY, OVERSHOT RETRIEVAL TOOL ASSY	P2000027891	Ø 471	3241		1415
TUBING HANGER SETTING TOOL ASSY, DECK STORAGE/ SETTING STAND	P201871-2051	Ø 914		1365	1230
BOTTOM TEST CAP ASSY, F/ THRT	P2000024275	Ø 458		713	569
TEST CAP ASSY, F/ THRT, TOP TEST CAP	P2000024257	Ø 470		930	471
TUBING HANGER HANDLING/TEST TOOL ASSY	P2000024303	Ø 375		2082	514
TUBING HANGER SHIPPING FRAME	P213887	762	762	4572	662
SUPPORT PLATE ASSY, F/ TUBING HANGER, F/ 37-1/2 MASTER BUSHING	P2000005684	Ø 966		150	625
TUBING HANGER ORIENTATION JOINT ASSY	P2000024384	Ø 471	3230		2749
TUBING HANGER ANNULUS ACCESS JOINT ASSY	P2000024417	Ø 513	1556		1342
BOP ORIENTATION PIN ASSEMBLY W/ TEST CAP	P205184-0014	Ø 316	1155		244
TUBING HANGER ORIENTATION MANDREL/ BOP ORIENTATION PIN ASSEMBLY, W/ 3K WP ACTUATOR, F/ WEST GEMINI DRILLSHIP	P2000031922	Ø 288	322		71
BOTTOM TEST CAP ASSY, F/ TUBING HANGER, ORIENTATION JOINT	P2000024316	Ø 466		314	264
TEST CAP ASSY, F/ TUBING HANGER, ORIENTATION JOINT	P2000029784	Ø 204		780	129
BOP TEST TOOL ASSY, 5” X 2-10K F/ 18 3/4” OD, EVXT TH SYSTEM.	P217206	Ø 471		937	492

Component Dimensions and Weight

Description	FMC P/N	Width (mm)	Length (mm)	Height (mm)	Weight (kg)
WIRELINE PLUG ASSY, 5"-10K, 4.540" MAX OD, F/ 4.665" SEAL BORE, ELASTOMERIC SEALING	P2000030015	Ø 127	1302		57
WIRELINE PLUG ASSY, 2"-10K, 1.935" MAX OD, F/ 1.875" SEAL BORE, ELASTOMERIC SEALING	P2000039729	Ø 49	887		6
WIRELINE PLUG RUNNING TOOL, F/ HALLIBURTON 4.665" FBN WIRELINE PLUG	P2000030005	Ø 122	700		57
WIRELINE RETRIEVAL TOOL, SUPPLIED BY HALLIBURTON	DP-18-6173	Ø 92	500		20
WIRELINE PLUG RUNNING TOOL, 10K, SUPPLIED BY BAKER, P/N H811562300, MODE L D PROBE	P2000030011				
WIRELINE PLUG RUNNING TOOL, SUPPLIED BY BAKER, MODEL SB 2 INCH RUNNING/PULLING TOOL FOR PRONG INSTALLATION	P2000030013	Ø 46	404		
WIRELINE PLUG RUNNING TOOL, SUPPLIED BY BAKER, MODEL GS 2 INCH PULLING TOOL	P2000030014	Ø 46	321		
WIRELINE PLUG RUNNING TOOL, SUPPLIED BY HALLIBUR-TON, EQUALIZING PRONG, F/ HALLIBURTON 4.665" FBN WIRELINE PLUG RETRIEVAL	P2000030026	Ø 61	690		16
Trees, Primary Equipment					
EVXT-DB ASSY, PRODUCTION	P2000024682	4774	3748	4000	47427
EVXT-DB ASSY, WATER INJECTION	P2000025189	4774	3846	4000	39723
ROV TREE CAP, EVXT, ASSY	P2000025411	426	533	1151	114
INSULATION CAP XT	P2000036756	Ø 1362		444	255
Trees, Test/ Handling/ Installation Equipment					
TEST STUMP ASSY, F/ XMAS TREE, H4 PROFILE, DUMMY TUBING HANGER	P2000026859	3335	3286	1775	7378
ASSY/INSPECTION STAND ASSY, F/ XMAS TREE AND LRP	P2000031535	3163	3163	3074	3282
TEST STUMP ASSY, F/ XMAS TREE, H4 PROFILE, FX-2 SEAL RECESS, DUMMY TUBING HANGER	P2000028353	3335	3286	1785	7132
TEST/HANDLING CAP ASSY, F/ XMAS TREE, W/ PRESSURE TEST	P2000039682	Ø 925		139	1349
HANDLING TOOL ASSY, F/XMAS TREE	P2000039684	Ø 926		139	1349
MECHANICAL RELEASE TOOL, ASSY, F/ EVXT-DB	P2000039265	Ø 1132		1459	1437
TREE RUNNING TOOL ASSY. F/ WIRE LINE	P2000042355	Ø 1220		2791	8085
LIFTING SUB ASSY, F/ TREE RUNNING TOOL	P6000094588	Ø 408	1063		313
TRANSPORTATION BASKET FRAME, F/ TREE RUNNING TOOL, W/ SLINGS.	P2000042294	1840	10280	1494	4730
CHOKE INSERT RUNNING & RETRIEVAL TOOL	100040748	Ø 721		1737	382
OVERRIDE, M3000 SUBSEA ACTUATOR LOCK OUT TOOL ASSY, SLOT-5 W/SPECIAL REDUCED BODY DIAMETER	P2000003597	Ø 254	374	414	46
Riser Topside Equipment					
SURFACE FLOW TREE ASSY	P2000024608	1700	2549	3159	10000
BOTTOM TEST CAP ASSY, F/ SURFACE FLOW TREE, & CIRCULATION HEAD	P2000022511	Ø 524		186	216
SUPPORT SKID ASSY, F/ SFT/SLICK JOINT	P6000075721	1120	650	1318	320
CIRCULATION HEAD ASSY	P2000024609	1154	1055	2162	2947
SHIPPING BASKET ASSY, F/ CIRCULATION HEAD	P6000068364	1760	1450	3200	1480
TENSION FRAME ASSY	P6000068658	2050	1160	15404	11923
HANG OFF BUSHING, F/ UNION NUT, F/DS-1 RIG	P6000068711	Ø 1116		278	1045
HANG OFF BUSHING, F/ UNION NUT, F/WEST GEMINI RIG	P6000068710	Ø 1124		278	1057
HANG OFF BUSHING, F/ SPEEDLOC, F / DS-1 RIG	P6000069098	Ø 1116		278	940

Component Dimensions and Weight

Description	FMC P/N	Width (mm)	Length (mm)	Height (mm)	Weight (kg)
HANG OFF BUSHING,F/ SPEEDLOC, F /WEST GEMINI RIG	P6000069097	Ø 1124		278	952
SWIVEL TOPSIDE	P6000074325	Ø 810		1855	2634
TEST/LIFTING CAP ASSY, F/ SPEEDLOC, SEGMENTED SL-222	P6000074147	Ø 800		766	1080
SHIPPING BASKET ASSY, F/ SWIVEL	P6000068365	1950	1969	2500	1875
RISER, ADAPTER FLANGE ASSY, API 7 1/16 IN W/BX156 TOP & API 7 1/16 IN W/ SBMS BOTTOM, 5 1/4IN BORE, 10K WP	P6000080651	Ø 505		587	362
TEST FLANGE ASSY, F/ GENERAL USE, API 7 1/16 IN W/ SBMS, 5 1/4 IN BORE, 1 0K WP	P6000090296	Ø 505		393	279
Riser Products					
DRILL PIPE RISER, STANDARD JOINT	P6000070444	Ø 216	14000		1095
DRILL PIPE RISER, PUP JOINT, 20 FT	P6000070445	Ø 216	6200		603
DRILL PIPE RISER, PUP JOINT, 15 FT	P6000070446	Ø 216	4800		484
DRILL PIPE RISER, PUP JOINT, 10 FT	P6000070447	Ø 216	3200		313
DRILL PIPE RISER, PUP JOINT, 5 FT	P6000070448	Ø 216	1600		196
RISER SLICK JOINT, ASSY, TH MODE	P6000068177	Ø 685	16497		5442
UNION NUT RISER, EXTENSION JOINT TH-MODE, ASSY	P6000068220	Ø 351	6441		1095
RISER SLICK JOINT, ASSY	P6000068384	Ø 596	16332		5903
RISER STRESS JOINT, UPPER ASSY	P6000068214	Ø 655	6405		1661
RISER STRESS JOINT, LOWER ASSY	P6000068237	Ø 624	13167		1549
DUAL HSLV C/W OFFSET CLAMPS & UMBILICAL TERMINA-TIO N CLAMP	P2000024742	Ø 487	12426		4450
CROSSOVER ASSY, UN BOX TOP X 6 5/8" GRANT PRIDECO DP BOX BTM	P6000068351	Ø 385	3233		391
CROSSOVER ASSY, SPEEDLOC II SL210 CONNECTOR TOP X 6 5/8" GRANT PRIDECO FM C69 DP BOX BTM	P6000068249	Ø 655	2728		964
SAVER SUB, DRILLPIPE 6 5/8 IN OD, 10K, ASSY, PIN TOP X PIN BTM X 1000 MM LG, FMC 69 CONNECTOR	P6000068222	Ø 216	1474		208
SAVER SUB, DRILLPIPE 6 5/8 IN OD, 10K, ASSY, BOX TOP X PIN BTM X 500 MM LG, FMC69 CONNECTOR	P6000070104	Ø 216	787		88
Riser Handling Equipment					
SHIPPING BASKET ASSY, F/ RISER JOINT, STANDARD	P6000068360	1840	1491	15280	6920
SHIPPING BASKET ASSY, F/ RISER PUP JOINTS	P6000068361	140	1491	15280	6920
SHIPPING BASKET ASSY, F/ SLICK JOINT, TH MODE.	P6000068362	1840	1491	18000	7120
SHIPPING BASKET ASSY, F/ SLICK JOINT, XT MODE	P6000068191	1840	1491	18000	7120
SHIPPING BASKET ASSY, F/ STRESS JOINT, UPPER	P6000068192	1840	1491	10280	4380
SHIPPING BASKET ASSY, F/ STRESS JOINT, LOWER	P6000068193	1840	1491	15280	6180
SHIPPING BASKET ASSY, F/ HIGH SET LUBRICATOR VALVE	P6000068190	1840	1491	15280	6180
Riser Subsea Equipment					
EDP, ASSY	P6000067695	4120	3376	2676	19704
LRP, ASSY	P6000067696	3376	3447	3737	25616
SIMPLIFIED LANDING STRING F/ VXT, ASSY, 10K, (DS1)	P6000068304	Ø 494	14438		4324
SIMPLIFIED LANDING STRING F/ VXT, ASSY, 10K, (WEST GEMINI)	P6000068894	Ø 494	16173		4505

Description	FMC P/N	Width (mm)	Length (mm)	Height (mm)	Weight (kg)
Riser Subsea Test/ Handling Equipment					
TEST/HANDLING CAP ASSY, F/ EMERGENCY DISCONNECT PACKAGE	P6000076069	Ø 634		814	748
TEST/TRANSPORTATION SKID ASSY, F/ EMERGENCY DISCONNECT PACKAGE	P6000068426	2805	2805	1711	2413
CAP INBOARD, TEST, KC6-17, ID 5" + 2" + 28HL, ASSY	P6000068741	Ø 820		539	1046
TEST/TRANSPORTATION SKID ASSY, F/ LOWER RISER PACKAGE	P6000068698	2859	2859	2900	3970
SHIPPING BASKET ASSY, F/ LANDING STRING, SIMPLIFIED, DS-1	P6000068194	1840	1491	18000	7120
SHIPPING BASKET ASSY, F/ LANDING STRING, SIMPLIFIED, WG	P6000068363	1840	1491	18000	7120
VXT ADAPTER, ASSY, PRODUCTION BORE ACCESS	P6000086884	Ø 1159		2103	7410
TEST/TRANSPORTATION SKID ASSY, F/ LOWER RISER PACKAGE	P6000068698	2859	2859	2900	3970
TEST/LIFTING CAP ASSY, F/ 18 3/4" EQUIPMENT, FLANGE, DUAL BORE, W/ SLING	P6000092987	Ø 956		391	794
Work Over Control System					
SCM MK II, 620, WOCM	P6000068770	Ø 700		1900	1700
IWOCS, ELECTRIC HYDRAULIC, HPU/MCP CONTAINER	P6000068327	2550	4728	3152	23100
IWOCS, SURFACE FLOW TREE CONTROL PANEL	P6000068334	610	850	1850	450
XT UMBILICAL AND REEL	P6000068347	4187	6010	4214	40285
TH UMBILICAL AND REEL	P6000070859	4450	3800	3840	22320
HSLV UMBILICAL AND REEL	P6000071653	2300	2300	2375	4500
SHEAVE, XT UMBILICAL SYSTEM	P6000068320	1955	450	2000	750
SHEAVE, TH UMBILICAL SYSTEM, ROLLER TYPE	P6000070857	450	2254	1474	650
SHEAVE, HSLV UMBILICAL SYSTEM	P6000071655	450	1782	1439	450
Work Over Control System Handling Equipment					
TEST STAND ASSY, F/ SCM, MKII/MKIII	P6000068776	2000	2400	2100	1350
SCMMB MK II, TEST & FLUSHING PLATE	P6000068754	Ø 700		2500	500
XT UMBILICAL BASKET	P6000068348	3955	3354	2525	6000
TH UMBILICAL BASKET, F/ JUMPERS AND SHEAVES	P6000070856	3475	2700	1900	6000
HSLV UMBILICAL BASKET	P6000071656	3060	2460	1680	4300
Template/ Manifold and Sattellite System					
CLOSED CAISSON FOUNDATION, CCF 10A, ASSY	P6000067709	8890	8356	15392	68087
CLOSED CAISSON FOUNDATION, CCF 10B, ASSY	P6000067714	8927	8356	13892	62212
MANIFOLD SUPPORT STRUCTURE, MSS 14A, ASSY	P6000067712	11168	11393	3290	44697
MANIFOLD SUPPORT STRUCTURE, MSS 14B, ASSY	P6000067717	12754	8872	3290	40826
GUIDEPOST, W/CENTER ROD AND SINGLE WEAK LINK, FOR UCON, L=6350 MM, ASSY	P6000073080	Ø 241	6622		745
GUIDEPOST, W/CENTER ROD AND SINGLE WEAK LINK, FOR UCON, L=3650 MM, ASSY	P6000073079	Ø 241	3922		545
MANIFOLD, MODULE, ASSY, M101	P6000067884	8960	11500	4510	130672
MANIFOLD, MODULE, ASSY, M102	P6000067885	13015	8560	4510	121720
MANIFOLD, MODULE, ASSY, M103	P6000067886	13178	8560	4510	121690
MANIFOLD, MODULE, ASSY, M104	P6000067887	13178	8560	4510	121836
MANIFOLD, MODULE, ASSY, M201	P6000067888	13178	8560	4510	100287
MANIFOLD, MODULE, ASSY, M202	P6000067889	13015	8560	4510	127749

Description	FMC P/N	Width (mm)	Length (mm)	Height (mm)	Weight (kg)
MANIFOLD, MODULE, ASSY, M203	P6000067890	13015	8560	4510	127730
MANIFOLD, MODULE, ASSY, M204	P6000067891	13178	8560	4510	100316
PLM, ASSY	P6000067895	5199	5656	1568	16768
PGB, 12 A, PRODUCTION, ASSY	P6000078790	5203	2351	2255	12950
PGB, 12 B, INJECTION, ASSY	P6000072525	5203	2640	2255	12917
CAP INBOARD, LP ELASTOMER, KC4-12, ID 11", UCON-H, ASSY	P6000068739	652	716	196	53
MQC-13 MK II, OUTBOARD SEAL CAP, F/ 5 LINES, NCC	P6000069150	Ø 280		500	41
CAP INBOARD, HP METAL, REINSTALLABLE, KL4-12, ID 6" + 2" + 8HL, UCON-H, AS SY	P6000068763	780	1044	200	372
CAP INBOARD, LP ELASTOMER, KC4-12, ID 1 1/2 + 1 1/2 + 1 1/2 + 1 1/2 + 8H L, UCON-H, ASSY	P6000068759	558	716	189	62
CAP INBOARD, HP METAL, REINSTALLABLE, KL4-12, ID 1 1/2" + 1 1/2" + 1 1/2" + 1 1/2" + 8HL, UCON-H, ASSY	P6000068805	1047	780	200	375
CAP INBOARD, LP ELASTOMER, KC4-12, ID 9", UCON-H, ASSY	P6000068743	565	716	196	52
PGB, ROTATION AND ORIENTATION TOOL, ASSY	P6000016029	Ø 1615		860	933
LIFTING, INSTALLATION TOOL, PGB, ASSY	P6000089126	Ø 1763		4937	1018
Tie In Tools Equipment					
ACTUATION TOOL, UCON-H-12, CAT, ASSY	P6000065193	830	1430	770	196
ACTUATION TOOL, INSULATED, UCON-H-12, CAT, ASSY	P6000061649	1300	1700	1350	236
STROKING TOOL, UCON-H-12, SST, ASSY	P6000061566	208	1188	714	71
STAB 4L, UCON-H, HYDRAULIC JUMPER W/ INTENSIFIER, 3M, ASSY	P6000064510	1264	687	818	195
GUIDE POST, INTERVENTION, UCON-H, ROV LIGHTWEIGHT, 1.5M, ASSY	P6000065075	Ø 250	1500		79
GUIDE POST, INTERVENTION, UCON-H, 3.6M, ASSY	P6000068845	Ø 250	3600		417
GUIDE POST, INTERVENTION, UCON-H, 4.5M, ASSY	P6000073309	Ø 250	4511		514
CAP INBOARD, PROTECTION, KC4-12, ASSY	P6000076065	596	237	728	49
CAP INBOARD, PROTECTION, KC4-12, SLIM TYPE, ASSY	P6000097754	646	184	803	33
REINSTALLABLE, GRABBER POST, 2M, ASSY	P6000073163	Ø 150	2327		57
Connections, Test Equipment					
CAP INBOARD, TEST, KC4-12, ID 9", UCON-H, ASSY	P6000068761	Ø 699		356	491
CAP INBOARD, TEST, KC4-12, ID 6" + 2" + 8HL, UCON-H, INSULATION, ASSY	P6000068723	Ø 699		390	383
CAP INBOARD, TEST, KC4-12, ID 1 1/2" + 1 1/2" + 1 1/2" + 1 1/2" + 8HL, UCON- H, ASSY	P6000068760	Ø 610		270	489
CAP INBOARD, TEST, KC4-12, ID 11", UCON-H, ASSY	P6000068762	Ø 699		359	494
CAP INBOARD, TEST, KC4-12, ID 6" + 2" + 8HL, UCON-H, INSULATION, ASSY	P6000068723	Ø 699		390	383
CAP INBOARD, TEST, KC4-12, ID 6, UCON-H, ASSY	P6000068724	Ø 699		330	491
Intervention Running Tools Equipment					
RUNNING TOOL, HIGH PRESSURE CAP, UCON-H-12, ASSY	P6000063035	1567	1847	2827	979
MODULE RUNNING TOOL, SUBSEA CONTROL MODULE, ASSY, FOR SCM MK III	100015275	Ø 1364		1937	1243
MODULE RUNNING TOOL, SUBSEA CONTROL MODULE, ASSY, SCM150E200, EXT.MECH	100042064	Ø 1209		1733	1031
BASKET, INSTALLATION F/ FLYING LEADS, OFL, EFL & HFL, ASSY	P6000068672	4120	3300	3460	4114

Description	FMC P/N	Width (mm)	Length (mm)	Height (mm)	Weight (kg)
BASKET, ROV TOOL F/ MULTI PURPOSE, GENERAL TOOLS, ASSY	P6000099596	2650	3510	3460	500
BASKET, ROV TOOL F/ MULTI PURPOSE, UCON-H, W / MUDMAT, ASSY	P6000064658	3650	4450	2600	5300
SKID, TRANSPORT F/ RUNNING TOOL, HIGH PRESSURE CAP, UCON-H-12, ASSY	P6000064655	1893	1900	2100	903
TRANSPORTATION SKID, FOR MRT/SCM MK III, EXTENDED LOCKING MECHANISM	100028733	1477	1442	1827	846
MODULE RUNNING TOOL, SKID, ASSY, SCM 150/E200 EXT. MECH.	100048881	1315	1200	1750	663
ROV Tools Equipment					
TORQUE TOOL, GEAR BOX, ISO 13628-8 CLASS 4-6	P6000015059	Ø 398		783	63
TORQUE TOOL, GEAR BOX TEST JIG, ISO 13628-8 CLASS 4-6	P6000015062	500	320	624	62
TORQUE TOOL, GEAR BOX, ISO 13628-8 CLASS 4-5	P6000052092	Ø 340		451	37
TORQUE, TEST JIG CL 4-5	P6000023065	Ø 355		395	30
TORQUE TOOL, API 17D CLASS 1-4 (2700 NM)	100035992	300	360	599	38
REMOTE CONTROL UNIT, MK2	100035993	289	232	462	30
CALIBRATION TEST JIG, FOR TORQUE TOOL	7600544	Ø 300		400	30
SEAL-REPLACEMENT, UCON-H-12, INBOARD, SRT, MULIT-BORE, ASSY	P6000062938	940	234	1098	35
SEAL-REPLACEMENT, UCON-H-12, INBOARD, SRT, MONOBORE, ASSY	P6000062936	940	234	1098	40
HUB CLEANING, UCON-H-12, INBOARD/OUTBOARD, HCT, MONOBORE, ASSY	P6000065127	940	301	1084	58
HUB CLEANING, UCON-H-12, INBOARD/OUTBOARD, HCT, MULTIBORE ID6"+ 2"+8HL, ASSY	P6000068735	940	322	1098	40
HUB CLEANING, UCON-H-12, INBOARD/OUTBOARD, HCT, MULTIBORE ID1. 5+1.5+1.5+1.5+8HL, ASSY	P6000068734	940	313	1098	63
TOOL INTERFACE FRAME, UCON-H-12, TIF, ASSY	P6000062939	1363	781	1528	203
HUB INSPECTION CAMERA, MK.2, ASSY	P6000046966	160	70	622	7
EXTERNAL SEAL TEST KIT, ASSY	P6000039162	215	240	350	26
Flying Lead Orientation Tool (FLOT)	100036811	476	432	1041	75
LINEAR ACTU. O. TOOL, LAOT (STD. 5 IN10K)	100040011	Ø 437		300	47
OVERRIDE JACK, Universal 2t.	7601169	407	416	170	30
OVERRIDE JACK, MQC, MK2, ASSEMBLY	7604322	425	350	490	37
SCM OVERRIDE TOOL, MKII	100029631	250	200	801	39
SEAL-REPLACEMENT, WELLHEAD VX 18 3/4IN, ASSY	P6000011921	Ø 460		238	15
WELLHEAD CLEANING, VX 18 3/4"	P6000032617	Ø 745		657	79
WEPCO GUIDE WIRE ANCHOR SWL 4T, ACC. VMO	100017933	220	190	830	21
TUBING HANGER WASH OUT, LANCE, ASSY	P6000012750	430	430	2000	19
TORQUE, CLUTCH 80NM	P6000035928	Ø 170		311	12
STORAGE CONTAINER ASSY, F/ ROV TOOLS, UCON	P6000069509	6400	3000	2438	4800
Override Jack, Tubing hanger ori. pin	100007826	510	225	280	64
ROV DOCKING FIXTURE, API 17D CLASS 4, MQC MK2 ADAPTER W STAB 4L, ASSY	P6000073644	290	660	893	76
TUBING HANGER ORIENTATION CHECK, LASER, MK 2, ASSY	P6000019580	721	634	432	82
TUBING HANGER ORIENTATION CHECK, CALIBRATION JIG, MK2	P6000021047	570	997	165	26

Description	FMC P/N	Width (mm)	Length (mm)	Height (mm)	Weight (kg)
LATCH, LIFT TOOL, API 17D CL.1-4, DHL 1.6T, ASSY	P6000060089	261	363	569	44
SKID, INSTALLATION & RETRIEVAL F/ INSULATION RING	P6000027260	2400	2400	2261	222
BASKET, INSTALLATION & RETRIEVAL F/ INSULATION RING	P6000032508	3045	1518	2200	1650
ROV DOCKING FIXTURE, API 17D CLASS 4, MQC MK2 ADAPTER, ASSY	P6000098569	994	436	497	64
Umbilical Connection Equipment					
TERMINATION HEAD KC4.2-12, ID 1 1/2" + 1 1/2" + 1 1/2" + 1 1/2" + 8HL, UCON- H-12, UMB, STRAIGHT, ASSY, DYNAMIC	P6000068807	5550	1350	1020	3793
TERMINATION HEAD KC4.2-12, ID 1 1/2" + 1 1/2" + 1 1/2" + 1 1/2" + 8HL, UCON- H-12, UMB, REVERSED, ASSY, STATIC	P6000068808	5550	1350	1020	3790
TERMINATION HEAD KC4.2-12, ID 1 1/2" + 1 1/2" + 1 1/2" + 1 1/2" + 8HL, UCON- H-12, UMB, STRAIGHT, ASSY, STATIC	P6000074351	5550	1350	1020	3789
CAP OUTBOARD, HP ELASTOMER, KC4-12, ID 1 1/2"+ 1 1/2" + 1 1/2" + 1 1/2" + 8 HL, ASSY	P6000068809	247	426	654	80
LIFTING TOOL, FLEXIBLE SEALINE, UCON-H-12, ASSY, FSLT.	P6000065177	598	2332	4191	2674
LIFTING TOOL, FLEXIBLE SEALINE, UCON-H-12, ASSY, FSLT, SHORT, SURFACE HA NDLING	P6000096441	598	2332	2891	1075
Flow Line Products					
TERMINATION HEAD KC4.2-12, ID 11", UCON-H-12, INSU-LATED, ASSY, INCL.GFU	P6000068811	3930	1360	1238	5313
TERMINATION HEAD KC4.2-12, ID 9", UCON-H-12, INSU-LATED, ASSY, INCL. GFU	P6000068813	3925	1360	1238	5255
TERMINATION HEAD KC4.2-12D, ID 11", STABCON 1, ASSY	P6000042557	3272	1347	2604	3595
CAP OUTBOARD, LP ELASTOMER, KC4-12, ID 11, UCON-H, ASSY, FOR INSULATED TERMINATION HEAD	P6000068812	Ø 976		256	81
CAP OUTBOARD, LP ELASTOMER, KC4-12, ID 9", UCON-H, ASSY, FOR INSULATED TERMINATION HEAD	P6000068814	Ø 976		256	81
CAP OUTBOARD, HP ELASTOMER, KC4-12D, ID 11", ASSY, STANDARD	P6000042638	Ø 406		153	77
HUB INBOARD, TEST, KC4-12, ID 11", UCON-H-12, ASSY	P6000070568	Ø 427		490	445
HUB INBOARD, TEST, KC4-12, ID 9", UCON-H-12, ASSY	P6000070570	Ø427		507	464
ROV TOOL, REINSTALLABLE, LIFTING TOOL, UCON-H, RSLT, ASSY	P6000068030	Ø 420		1014	130
CAP INBOARD, LP ELASTOMER, KC4-12, ID 9", UCON-H, ASSY	P6000068743	562	716	196	52
CAP INBOARD, TEST, KC4-12, ID 9, UCON-H, ASSY	P6000068761	Ø 699		356	491
CONNECTION CRADLE, UCON-H-12, ASSY	P6000065191	1070	645	687	691
CAP INBOARD, TEST, KC4-12, ID 9", UCON-H, WITH FLUSH-ING PORT, ASSY	P6000082214	Ø 573		297	198
Well Jumper Products					
TERMINATION HEAD KC4.2-12, ID 6" + 2" + 8HL, UCON-H-12, INSULATED, ASSY, I NCL. GFU	P6000068817	3388	1360	1238	5222
CAP OUTBOARD, HP ELASTOMER, KC4-12, ID 6" + 2" + 8HL, UCON-H, ASSY	P6000068818	Ø 976		296	113
TERMINATION HEAD KC4.2-12, ID 6", UCON-H-12, ASSY	P6000068819	3337	1360	1238	3100
CAP OUTBOARD, LP ELASTOMER, KC4-12, ID 6", UCON-H, ASSY	P6000068820	Ø 426		198	58
REINSTALLABLE, LIFTING TOOL, UCON-H, RSLT, ASSY	P6000068030	Ø 420		1014	130