ICHTHYS GAS FIELD DEVELOPMENT

DOCUMENT COVER SHEET	Total # of Pages (incl. Doc Cover Sheet)	197

Company Document No	D100-AY-MAN-10015			**Revision No**		A
Document Title	MANUAL - PERSONAL HANDBOOK SUBSEA EQUIPMENT					
Contract/Purchase Order No	800118					
Equipment Tag No	N/A					
Contractor Document No				**Contractors Rev No**		NC
Contractor shall ensure that documents have been fully checked and approved prior to submittal to INPEX.	Prepared	R Stroinski	Checked	M H Zulkifli	Approved	G Reilly
	Date	27/04/2017	Date	27/04/2017	Date	27/04/2017

Notes:	**Contractor Name, Address and Logo**
	GE Oil & Gas Australia Pty Ltd. 631 Karel Avenue JANDAKOT, WA 6164 GE Oil & Gas

REV No	DATE	ISSUE PURPOSE
A	27/04/2016	ISSUED FOR REVIEW

Revision History to Company's Document Number

GE Confidential and Proprietary Information
GE Copyright 2012 All Rights Reserved

Inpex Ichthys

Service Handbook

Subsea Production System

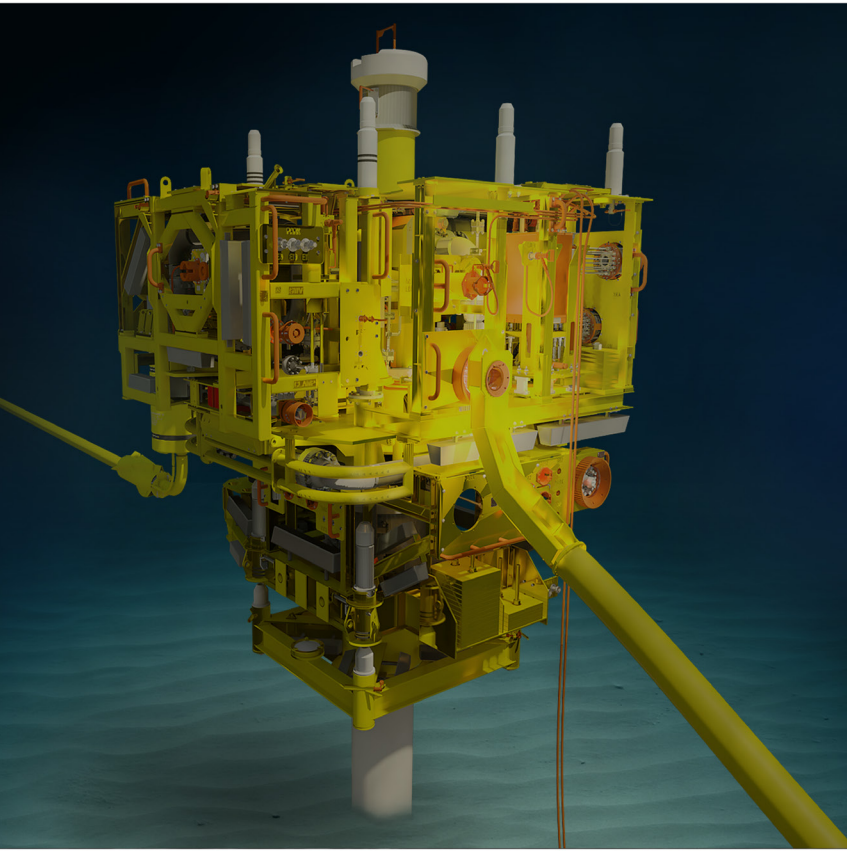

GE Oil & Gas

Ichthys PROJECT

INPEX

Contents

1	**Introduction**	**7**
1.1	Project Description	7
1.2	Subsea Production System : Main Operational Parameters	9
1.3	Abbreviations	10
2	**Field Overview**	**13**
2.1	Field and Facilities Locations	15
2.2	Subsea Production System: Main Operational Parameters.	15
3	**Wellhead System (WS)**	**16**
3.1	WS, Scope of Supply	16
3.2	WS, Stack-up	17
3.3	WHD System Data	18
4	**Tubing Head System (THS)**	**20**
4.1	THS Scope of Supply	20
4.2	Tubing Head Spool, General Arrangement	21
4.3	Tubing Head Spool, ROV Panels	22
4.4	Tubing Head Spool Data Table	22
5	**Tubing Hanger System**	**24**
5.1	Tubing Hanger (TH) General Arrangement	24
5.2	TH Cross Section	25
5.3	TH Data Table	26
5.4	Tubing hanger Running Tool (THRT)	27
5.5	THRT Data Table	28
5.6	Tubing Hanger Tools	29
5.7	Corrosion Cap	30
6	**Xmas Tree System**	**32**
6.1	Xmas Tree (XT) General Arrangement	33
6.2	XT Schematic	34
6.3	Flow Control Module (FCM) General Arrangement	35
6.4	FCM Schematic	36
6.5	FCM ROV Panels	37
6.6	XT Data Table	38
6.7	ROV Deployable Tree Cap	43
6.8	XT Deployment Plate	44
6.9	Xmas Tree System Stack Up	45
6.10	Xmas Tree System Cross Section	46
6.11	Acoustic Data Logger	47
7	**IWOCS and CWOR System**	**48**
7.1	Primary Topside Equipment, Scope of Supply	48
7.2	Riser System, Scope of Supply	49
7.3	Workover Intervention Equipment, Scope Of Supply	50
7.4	Miscellaneous Equipment, Scope Of Supply	51
7.5	IWOCS/CWOR Hydraulic Schematic	52
7.6	IWOCS/CWOR Electrical schematic	53
7.7	MCS Comms Interface	54

7.8	IWOCS/CWOR - Utilities Interface Data	55
7.9	IWOCS HPU	56
7.10	IWOCS HPU, Data Table	57
7.11	IWOCS SCU	58
7.12	IWOCS SCU, Data Table	59
7.13	WO Reeler	61
7.14	WO Reeler, Data Table	62
7.15	WO Umbilical	63
7.16	WO Umbilical, Data Table	64
7.17	TH reeler	65
7.18	TH reeler, Data Table	66
7.19	THRT Umbilical A	67
7.20	THRT Umbilical B	68
7.21	THRT Umbilicals, Data Table	69
7.22	Surface Test Tree (STT)	70
7.23	Circulation Head	70
7.24	Tension Frame	71
7.25	STT Data table	72
7.26	LRP EDP, General Arrangement	73
7.27	LRP, EDP, Cross Section	74
7.28	LRP, EDP, ROV Panels	75
7.29	LRP, EDP Data Table	78
7.30	Emergency Disconnect Package, EDP	82
7.31	Lower Riser Package, LRP	83
7.32	Hydraulic Jumpers, Deck and Subsea	84
7.33	Hydraulic Jumpers, Data Table	85
7.34	Intervention System - Stacked Up	86
7.35	Intervention System Stacked Up - Cross Section	87
8	**Manifold System**	**88**
8.1	Scope of Supply	88
8.2	Manifold, General Arrangement	89
8.3	Manifold Large Bore Piping	90
8.4	Manifold Small Bore Piping	90
8.5	Manifold, P & ID	91
8.6	Manifold Hydraulic Schematic	92
8.7	Subsea Control Module Schematic	93
8.8	Manifold Marking Drawings	94
8.9	Manifold Data Table	98
9	**Well Jumper**	**102**
9.1	Scope of Supply	102
9.2	Well Jumper, Data Table	103
10	**VCCS System**	**104**
10.1	Scope of Supply	104
10.2	720 VCCS Multibore Hub	105
10.3	450 VCCS Dualbore Hub	105

10.4 450 Pressure Cap 106
10.5 450 Pressure Cap, Data Table 107
10.6 720 Pressure Cap 108
10.7 720 Pressure Cap, Data Table 108
10.8 Vertical Clamp Connection Tool (VCCT) 109
10.9 VCCT, Data Table 109
10.10 Remote Component Replacement Tool (RCR) 110
10.11 RCR Data Table 111

11 HCCS System 113

11.1 Scope of Supply 113
11.2 Multibore Hub (MBH) 114
11.3 MBH Data Table 115
11.4 SHO Connection Tool 116
11.5 SHO Connection Tool, Data Table 117

12 Subsea Distribution Hub(SDH) 118

12.1 Scope of Supply 118
12.2 SDH, General Arrangement 119
12.3 SDH, Hydraulic Distribution System 120
12.4 SDH, Chemical Injection System 120
12.5 SDH, Electrical Schematic 121
12.6 SDH, Electrical Schematic 122
12.7 SDH, Hydraulic Schematic 123
12.8 SDH, Hydraulic Schematic 124
12.9 SDH Marking 125
12.10 SDH Data Table 128

13 SDU System 130

13.1 SDU Scope of Supply 130
13.2 SDU, General Arrangement 131
13.3 SDU, Data Tables 132
13.4 SDU, Electric Schematic-1 133
13.5 SDU, Electric Schematic-2 134
13.6 SDU, Electric Schematic-3 135
13.7 SDU, Electric Schematic-4 136
13.8 SDU, Electrical and Optical-1 137
13.9 SDU, Electrical and Optical-2 138
13.10 SDU, Electrical and Optical-3 139
13.11 SDU, Hydraulic and Chemical-1 140
13.12 SDU, Hydraulic and Chemical-2 141
13.13 SDU, Hydraulic and Chemical-3 142
13.14 UTA, General Arrangement 143
13.15 UTA, ROV Interfaces 143
13.16 UTA, Data Table 144
13.17 HCDM General Assembly 145
13.18 HCDM ROV Panels 146
13.19 Data Table 146
13.20 PCIU, General Arrangement 148

13.21	PCIU, Data Table	149
13.22	Semi Rigid Jumper (SRJ), General Arrangement	150
13.23	SRJ, Data Table	151
14	**SPS Topside Equipment**	**152**
14.1	Subsea Production Control System - Topside Equipment - 1	152
14.2	Subsea Production Control System - Topside Equipment-2	153
14.3	Master Control Station	154
14.4	Electronic Power Unit (EPU)	155
14.5	SSIV Electrical Power Unit (SEPU)	155
14.6	Hydraulic Power Unit (HPU)	156
14.7	HPU, Data Table	157
14.8	Topside Umbilical Termination Unit (TUTU)	159
14.9	TUTU, General Arrangement	159
14.10	TUTU, Data Table	160
15	**Subsea Control Module, SCM**	**162**
15.1	SCM Variant 1, General Arrangement	163
15.2	SCM Variant 1, Hydraulic Schematic	164
15.3	SCM Variant 2, Hydraulic Schematic	165
15.4	SCM Variant 2, Interfaces	166
15.5	SCM Data Table	167
15.6	Electronic Hydraulic Consolidation Model (EHCM)	168
15.7	General Arrangement	168
15.8	EHCM, Data Table	168
16	**FLX 360 Connection System**	**170**
16.1	Fixed Plates	170
16.2	Long term Protectice Cover	170
16.3	FLX360 Flying Lead Terminations	171
16.4	FLX360 Fixed Test & Flushing Plate	171
16.5	FLX360 Flying Test & Flushing Plate	172
16.6	FLX360 Compensation Plate	172
16.7	ROV Tool	173
16.8	FLX 340 Diver/Workshop Tool	173
17	**Reference Data**	**174**

1 Introduction

1.1 Project Description

The scope of the project is to develop the INPEX Ichthys Field in the Browse Basin with the aim of producing Liquefied Natural Gas (LNG), Liquefied Petroleum Gas (LPG) and gas condensate for exportation.

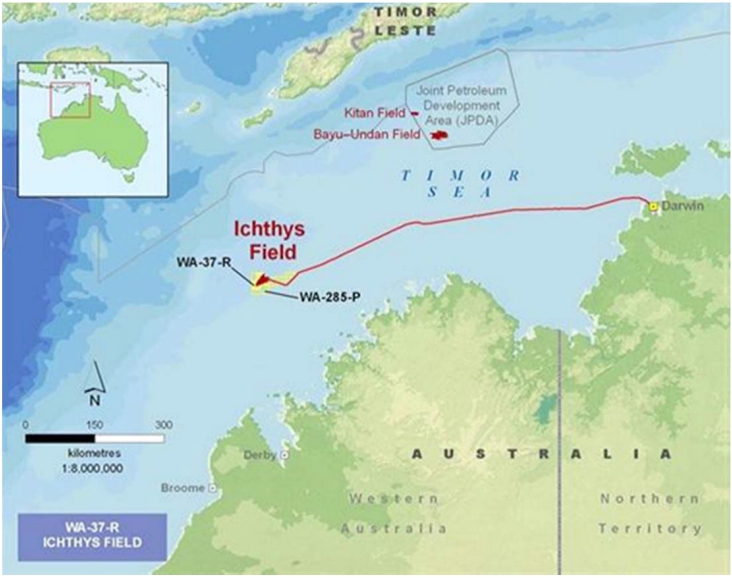

There is a need to install offshore production facilities for the extraction of natural gas and condensate at the Ichthys Field, as well as a gas export pipeline from the field to onshore facilities at Blaydin Point near Darwin in the Northern Territory. A two-train gas processing plant and offloading production jetty at a site zoned for development on Blaydin Point is to be constructed and with additional condensate to be extracted and exported from the offshore production location.

The INPEX Ichthys Field is approximately 40km x 20km and consists of two reservoirs: the Brewster Member and the Plover Formation. The main reservoir is the Brewster Member of the Upper Vulcan Formation and can be broadly classified into two sections: upper and lower sandstone. In 2003 and 2004, INPEX completed a three well appraisal program (Ichthys 1A, Ichthys Deep 1, and Ichthys 2A) to provide better definition of this discovery. Most recently, the Ichthys North-1 (2007) and Ichthys West-1 (2008) wells have been drilled to provide further delineation of the northern & western flanks

of the Field. The location (3SL/03-4) consisting of eleven reticular blocks has been declared over the field area.

The scope of the project covers a Central Processing Facility (CPF) and a Floating Production Storage and Offloading Facility (FPSO) located in the field, with a number of satellites Drilling Centers (DC) consisting of manifolds and subsea wells tied back to the CPF.

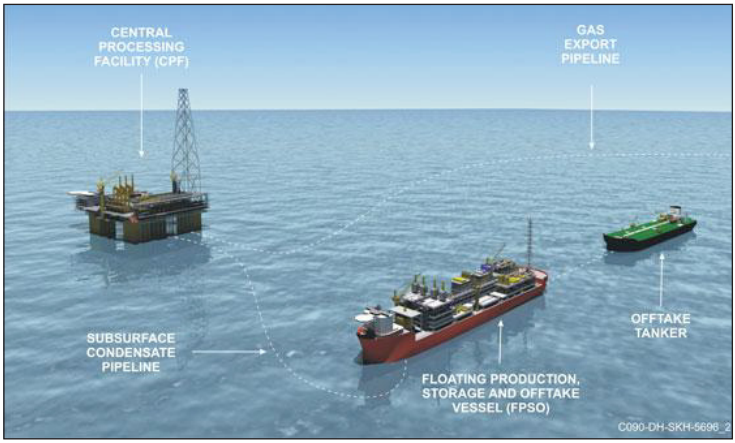

The CPF will house facilities to separate the gas, condensate and water, gas dehydration (water dew point only), gas export compression and facilities for transfer of condensate/produced water to the FPSO. The gas will be exported via a Gas Export Pipeline to the Onshore Facilities located at Blaydin Point, Darwin for further processing. The FPSO facilities will include condensate stabilization and storage in readiness for direct export to the market via shuttle tankers, as well as mercury removal (from condensate), flash gas compression MEG regeneration/reclamation and produced water treatment facilities. The development offshore will be phased with additional DCs and facilities added to the CPF and FPSO to support reservoir pressure depletion.

The main offshore facilities include:

- Semi-submersible Central Processing Facility (CPF)
- Floating Production Storage and Offloading (FPSO) unit for condensate
- Treatment and storage
- Umbilical's, Risers and Flow lines (URF)
- 885km export pipeline to DarwinWell Fluid Characteristics
- Subsea Production System (SPS)

1.2 Subsea Production System : Main Operational Parameters

Pipeline / Flowline	Design Pressure (Mpa)	Design Temperature Max / Min (°C)
Subsea Tree	69.0	
Upstream choke		155/ -18
Downstream choke		155 / -29
"Upstream" branches	69.0	155 / -29
"Downstream"	37.2	155 / -29
MEG System	37.2	60 / 0

1.3 Abbreviations

Abbr.	Full text
ALARP	As Low As Reasonably Practicable
AMV	Annulus Master Valve
ASD	Acoustic Sand Detector
AWV	Annulus Wing Valve
BDC	Brewster Drill Centre
BOP	Blow Out Preventer
CA	Corrosion Allowance
CAPS	Communication And Power System
CCV	Chemical Control Valve
CE	Controlled Environment
CE	Continuously Energized
CIMV	Chemical Injection Metering Valve
COE	Centre of Excellence
CP	Cathodic Protection
CPF	Central Processing Facility
CPI	Company Provided Item
CPI	Choke Position Indicator
CPT	Cone Penetration Test
CRA	Corrosion Resistant Alloy
CWOR	Completion WorkOver Riser
DC	Drill Centre
DCV	Directional Control Valve
DHPTT	Down Hole Pressure and Temperature Transmitter
DSL	Digital Subscriber Line
DST	Drill Stem Testing
EDP	Emergency Disconnect Package
EDU	Electrical Distribution Unit
EFAT	Extended Factory Acceptance Test
EFL	Electrical Flying Lead
EHFL	Electro Hydraulic Flying Lead
EPC	Engineering, Procurement and Construction (Project organization)
EPTP	Early Plover Test Production (Well)
EPU	Electrical Power Unit
EQD	Emergency Quick Disconnect
FAT	Factory Acceptance Test

Abbr.	Full text
FCM	Flow Control Module
FDS	Functional Design Specification
FEED	Front End Engineering Design
FLET	Flowline End Termination
FLOT	Flying Lead Orientation Tool
FPSO	Floating Production, Storage and Offloading
FSA	Formal Safety Assessment
FTHT	Flowing Tubing Head Temperature
GE O&G	General Electric Oil and Gas
GEP	Gas Export Pipeline
GRA	Guideline-less Re-entry Assembly
HCCS	Horizontal Clamp Connection System
HCDM	Hydraulic and Chemical Distribution Module
HES	Health, Environment and Safety
HFL	Hydraulic Flying Lead
HP	High Pressure
HPU	Hydraulic Power Unit
ICSS	Integrated Control & Safety System
IEM	Intrusive Erosion Monitor
IMR	Inspection, Maintenance and Repair
IWOCS	Installation and Workover Control System
LAN	Local Area Network
LAT	Lowest Astronomical Tide
LDHI	Low Dosage Hydrate Inhibitor
LNG	Liquefied Natural Gas
LP	Low Pressure
LPG	Liquefied Petroleum Gas
LRP	Lower Riser Package
MBH	Multi Bore Hub
MCS	Master Control Station
MDM	MEG Distribution Manifold
MEG	Mono Ethylene Glycol
MQC	Multi Quick Connection
MWP	Maximum Working Pressure
NA	Not Applicable
NB	Nominal Bore

Abbr.	Full text
ND	Nominal Diameter
NOPSA	National Offshore Petroleum Safety Authority (Australia)
OD	Outer Diameter
OFL	Optical Flying Lead
OS&D	Over, Short and Damage
P&T	Pressure and Temperature
PCIU	Power & Communications Interface Unit
PCS	Production Control System
PDC	Plover Drill Centre
PGB	Permanent Guide Base
PLC	Programmable Logic Controller
PSL	Product Specification Level
PT/TT	Pressure Transmitter/Temperature Transmitter
QMP	Qualification Management Plan
RAM	Reliability Availability Maintainability
RB	Riser Base
RBSPCU	Riser Base Subsea Power and Communication Unit
RCR	Remote Component Replacement
RCU	Remote Control Unit
RFSU	Ready For Start Up
ROT	Remotely Operated Tool
ROV	Remotely Operated Vehicle
RSS	Riser Support Structure
SCM	Subsea Control Module
SCMMB	Subsea Control Module Mounting Base
SCS	Subsea Control System
SCU	Subsea Control Unit
SDH	Subsea Distribution Hub
SDU	Subsea Distribution Unit
SEM	Subsea Electronics Module
SFT	Surface flow tree
SHO	Stab Hinge Over
SIT	System Integration Test
SPS	Subsea Production System

Abbr.	Full text
SRT	Site Receipt Test
SS	Stainless Steel
SSIV	Subsea Isolation Valve
SSSV	Sub Surface Safety Valve
STFL	Steel Tube Flying Lead
STT	Surface test tree
TH	Tubing Hanger
THRT	Tubing Hanger Running Tool
THS	Tubing Head Spool
TMA	Technical Maturity Assessment
TQD	Technical Query Deviation
TQP	Technical Qualification Program
TSA	Thermal Sprayed Aluminum
TT	Torque Tool
TUTU	Topside Umbilical Termination Unit
UPS	Uninterruptible Power Supply
UTA	Umbilical Termination Assemblies
VCCS	Vertical Clamp Connection System
VCCT	Vertical Clamp Connection Tooling
VG	Vetco Gray
VIV	Vortex Induced Vibration
VX	VX Gasket (Vetco primary metal to metal seal)
WGFM	Wet Gas Flow Meter
WHSIP	Well Head Shut In Pressure
WP	Work Package
WP	Working Pressure
WSCM	Workover Subsea Control Module
XT	Xmas Tree

2 Field Overview

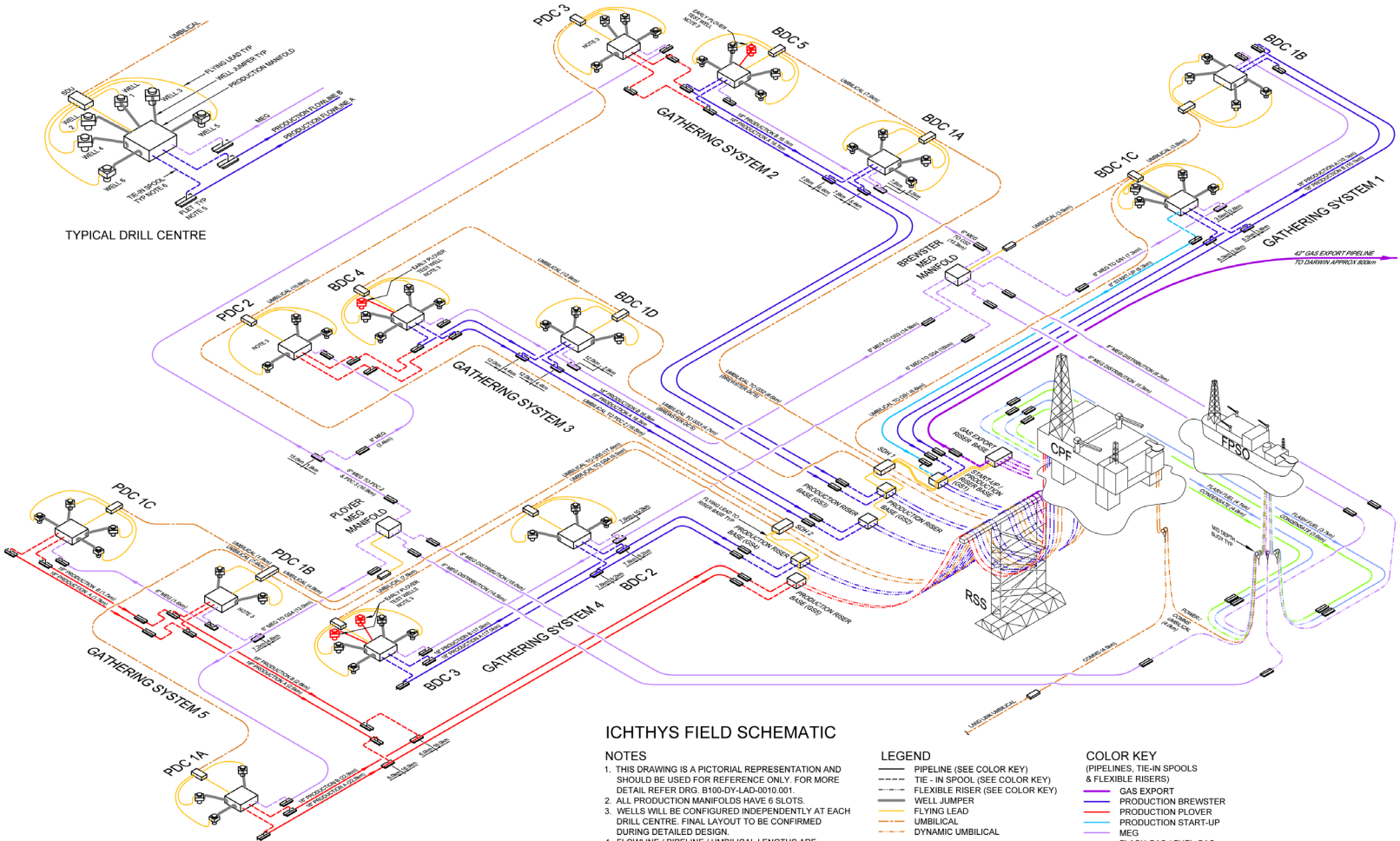

ICHTHYS FIELD SCHEMATIC

NOTES

1. THIS DRAWING IS A PICTORIAL REPRESENTATION AND SHOULD BE USED FOR REFERENCE ONLY. FOR MORE DETAIL REFER DRG. B100-DY-LAD-0010.001.
2. ALL PRODUCTION MANIFOLDS HAVE 6 SLOTS.
3. WELLS WILL BE CONFIGURED INDEPENDENTLY AT EACH DRILL CENTRE. FINAL LAYOUT TO BE CONFIRMED DURING DETAILED DESIGN.
4. FLOWLINE / PIPELINE / UMBILICAL LENGTHS ARE APPROXIMATE.
5. ALL FLETS / TEES HAVE HORIZONTAL CONNECTORS.
6. PRODUCTION SPOOLS HAVE BEEN SIMPLIFIED FOR CLARITY.

LEGEND

- PIPELINE (SEE COLOR KEY)
- TIE - IN SPOOL (SEE COLOR KEY)
- FLEXIBLE RISER (SEE COLOR KEY)
- WELL JUMPER
- FLYING LEAD
- UMBILICAL
- DYNAMIC UMBILICAL
- PLET, FLET,
- IN-LINE TEE
- UTA
- XMAS TREE

COLOR KEY

(PIPELINES, TIE-IN SPOOLS & FLEXIBLE RISERS)

- GAS EXPORT
- PRODUCTION BREWSTER
- PRODUCTION PLOVER
- PRODUCTION START-UP
- MEG
- FLASH GAS / FUEL GAS
- CONDENSATE

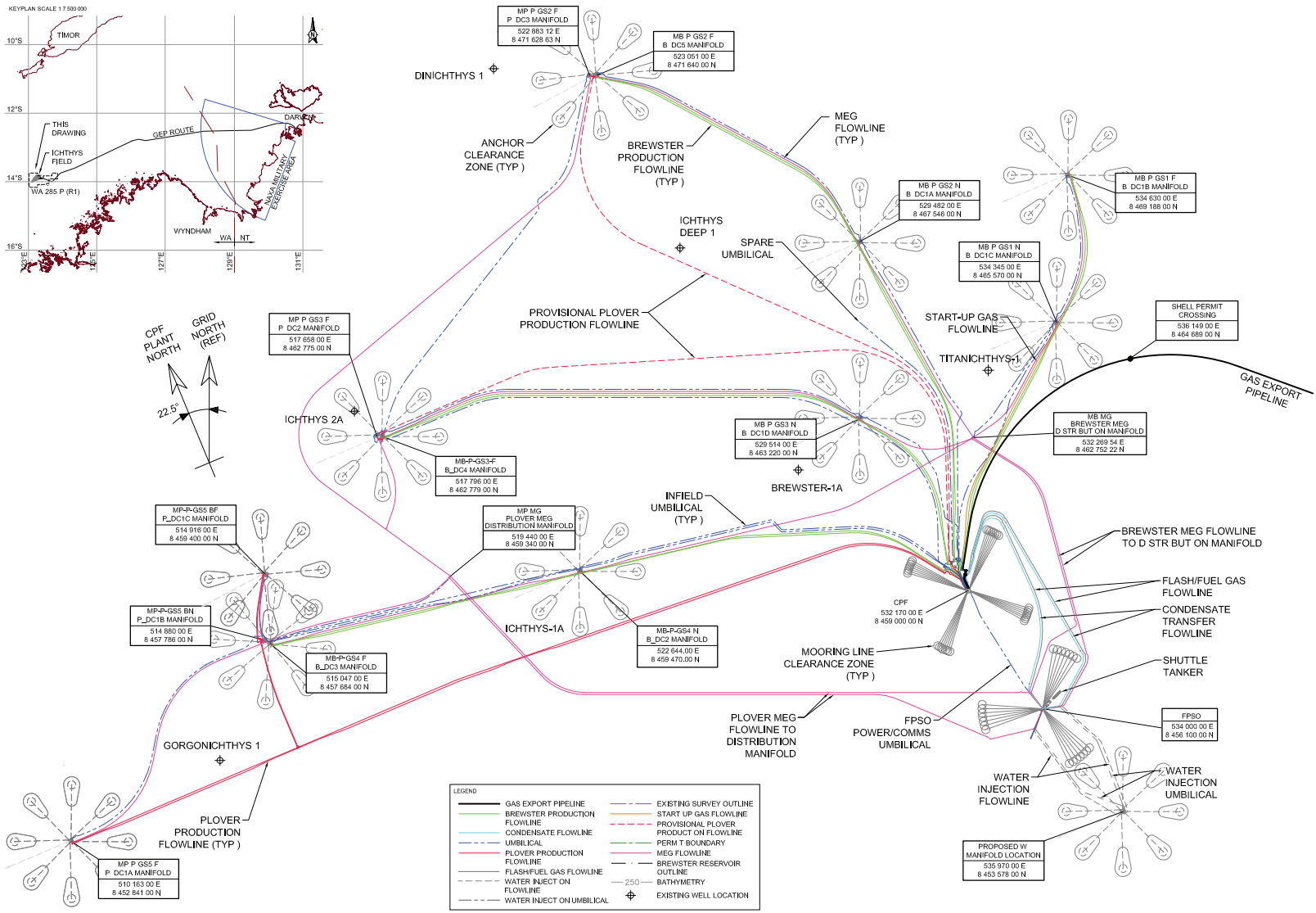
KEYPLAN SCALE 1:7 500 000
TIMOR
10°S
12°S
14°S
16°S
THIS DRAWING
ICHTHYS FIELD
WA 285 P (R1)
GEP ROUTE
DARWIN
NAVY MILITARY EXERCISE AREA
WYNDHAM
WA
NT
120°E
125°E
127°E
129°E
131°E
CPF PLANT NORTH
GRID NORTH (REF)
22.5°
MP P GS2 F
P DC3 MANIFOLD
522 883 12 E
8 471 628 63 N
MB P GS2 F
B DC5 MANIFOLD
523 051 00 E
8 471 640 00 N
DINICHTHYS 1
ANCHOR CLEARANCE ZONE (TYP)
BREWSTER PRODUCTION FLOWLINE (TYP)
MEG FLOWLINE (TYP)
MB P GS2 N
B DC1A MANIFOLD
529 482 00 E
8 467 546 00 N
MB P GS1 F
B DC1B MANIFOLD
534 630 00 E
8 469 188 00 N
ICHTHYS DEEP 1
SPARE UMBILICAL
MB P GS1 N
B DC1C MANIFOLD
534 345 00 E
8 465 570 00 N
PROVISIONAL PLOVER PRODUCTION FLOWLINE
START-UP GAS FLOWLINE
SHELL PERMIT CROSSING
536 149 00 E
8 464 689 00 N
TITANICHTHYS-1
GAS EXPORT PIPELINE
MP P GS3 F
P DC2 MANIFOLD
517 658 00 E
8 462 775 00 N
ICHTHYS 2A
MB-P-GS3-F
B_DC4 MANIFOLD
517 796 00 E
8 462 779 00 N
MB P GS3 N
B DC1D MANIFOLD
529 514 00 E
8 463 220 00 N
BREWSTER-1A
MB MG
BREWSTER MEG
D STR BUT ON MANIFOLD
532 269 54 E
8 462 752 22 N
INFIELD UMBILICAL (TYP)
MP-P-GS5 BF
P_DC1C MANIFOLD
514 916 00 E
8 459 400 00 N
MP MG
PLOVER MEG
DISTRIBUTION MANIFOLD
519 440 00 E
8 459 340 00 N
BREWSTER MEG FLOWLINE TO D STR BUT ON MANIFOLD
FLASH/FUEL GAS FLOWLINE
CONDENSATE TRANSFER FLOWLINE
MP-P-GS5 BN
P_DC1B MANIFOLD
514 880 00 E
8 457 786 00 N
ICHTHYS-1A
MB-P-GS4 N
B_DC2 MANIFOLD
522 644 00 E
8 459 470 00 N
CPF
532 170 00 E
8 459 000 00 N
MB-P-GS4 F
B_DC3 MANIFOLD
515 047 00 E
8 457 684 00 N
MOORING LINE CLEARANCE ZONE (TYP)
SHUTTLE TANKER
PLOVER MEG FLOWLINE TO DISTRIBUTION MANIFOLD
FPSO POWER/COMMS UMBILICAL
FPSO
534 000 00 E
8 456 100 00 N
GORGONICHTHYS 1
WATER INJECTION FLOWLINE
WATER INJECTION UMBILICAL
PLOVER PRODUCTION FLOWLINE (TYP)
MP P GS5 F
P DC1A MANIFOLD
510 163 00 E
8 452 841 00 N
PROPOSED W MANIFOLD LOCATION
535 970 00 E
8 453 578 00 N
LEGEND
GAS EXPORT PIPELINE
BREWSTER PRODUCTION FLOWLINE
CONDENSATE FLOWLINE
UMBILICAL
PLOVER PRODUCTION FLOWLINE
FLASH/FUEL GAS FLOWLINE
WATER INJECT ON FLOWLINE
WATER INJECT ON UMBILICAL
EXISTING SURVEY OUTLINE
START UP GAS FLOWLINE
PROVISIONAL PLOVER PRODUCT ON FLOWLINE
PERM T BOUNDARY
MEG FLOWLINE
BREWSTER RESERVOIR OUTLINE
250 BATHYMETRY
EXISTING WELL LOCATION

2.1 Field and Facilities Locations

Drill centre locations for the initial installation phase are listed in the table below, with coordinates relating to the geometric centre of the respective production manifold.

Drill Centre	Northing	Easting
BDC-1A	8 467 546	529 482
BDC-1B	8 469 188	534 630
BDC-1C	8 465 570	534 345
BDC -4	8 462 779	517 796
BDC -5	8 471 640	523 051

2.2 Subsea Production System: Main Operational Parameters.

Design Parameters	Brewster	Plover
Maximum temperature [°C] (FTHT)	135	155
Maximum Operating Well Pressure (WHSIP) [MPaa]	31.72	37.23
Typical flowrate range (MMscfd)	10 - 150	10 - 175
Maximum Flow rate (MMscfd)	200	200
CO2 [mol%]	8.45-10.4	14.8-17.3
H2S [ppm mol]	50	50

3 Wellhead System (WS)

3.1 WS, Scope of Supply

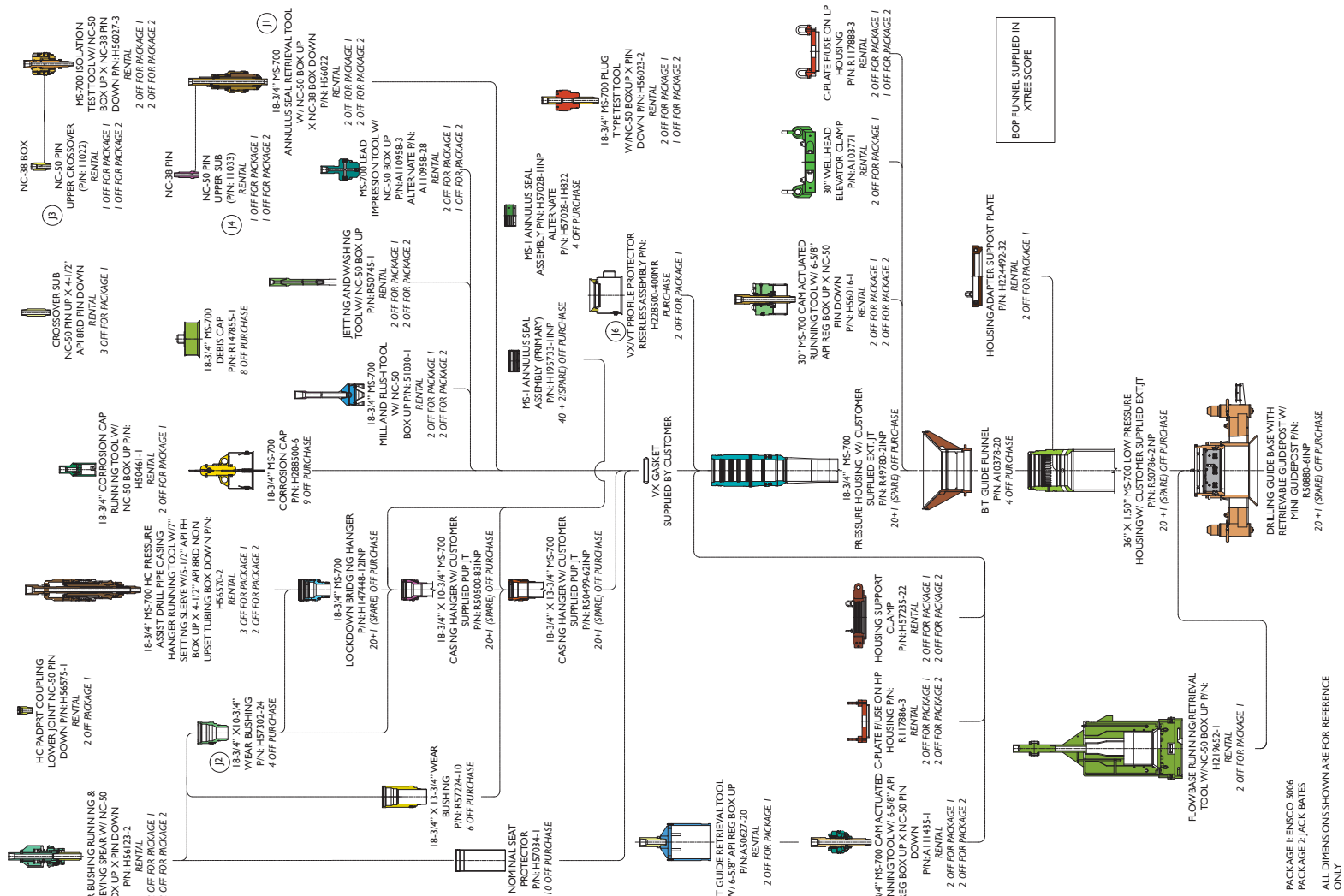

3.2 WS, Stack-up

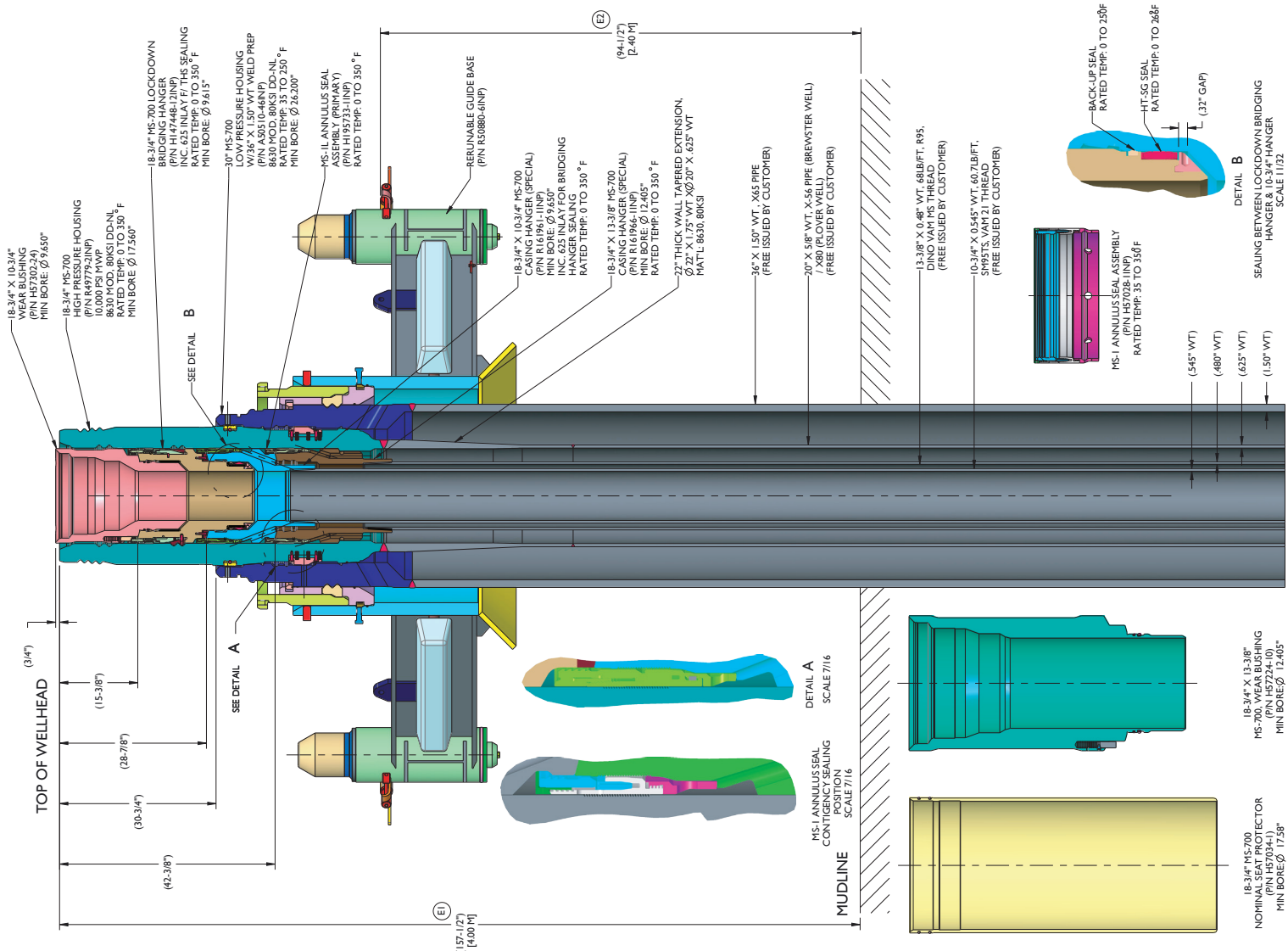

3.3 WHD System Data

Parameter	Specification
Pressure rating (MWP)	18-3/4" High Pressure Housing: 10,000 psi
	13-3/8" Casing Hanger: 7,500 psi
	10-3/4" Casing Hanger: 10,000 psi
	Lockdown Bridging Hanger: 10,000 psi
Temperature classification	2 °C to 155 °C
Material Service	DD-NL for 18-3/4" HP Wellhead Housing, all Casing Hangers (sized 10-3/4" and 13-3/8") & Lockdown Bridging Hanger
	10-3/4" Casing Hanger and Lockdown Bridging Hanger sealing ID shall be Inconel 625 inlay.
Internal load capacity	4.23MM lbs (1.5MM lbs total casing weight + 10,000 psi full bore pressure)
Bending capacity	2.1MM ft lbs
Anti-rotation capacity	500 kip ft (6 anti-rotation keys)
Sealing	Metal to Metal Seal with MS-1 and MS-1L
Design Life	40 Years Design Life

4 Tubing Head System (THS)

4.1 THS Scope of Supply

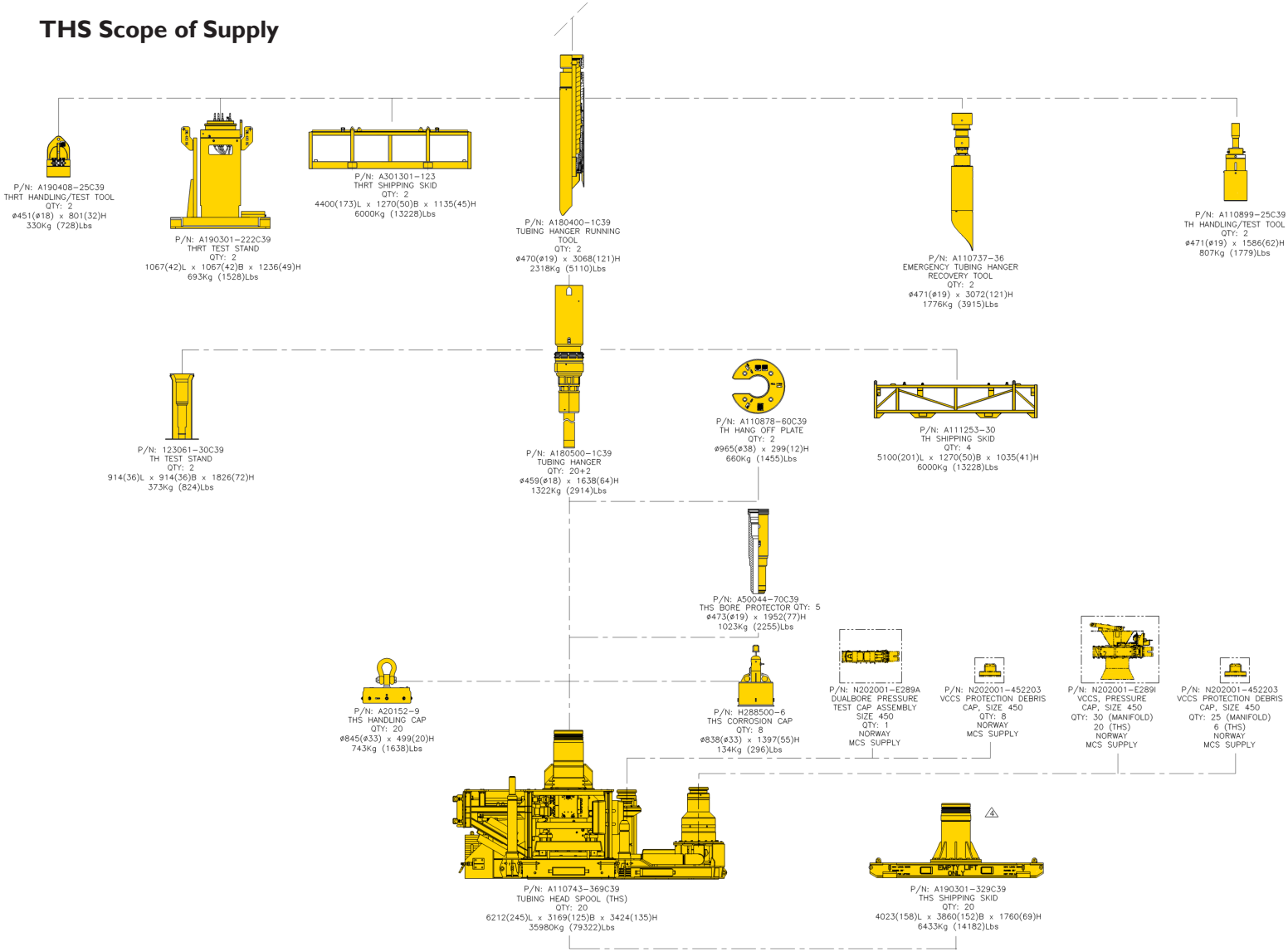

4.2 Tubing Head Spool, General Arrangement

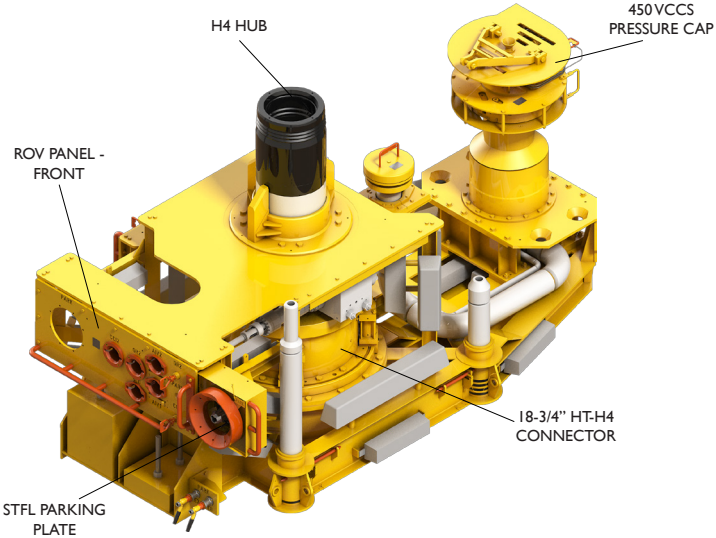

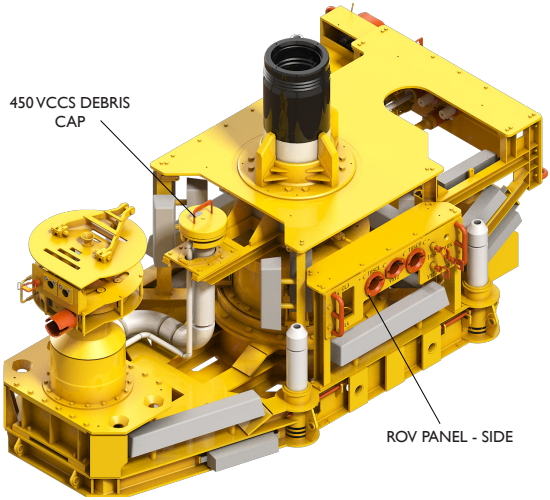

4.3 Tubing Head Spool, ROV Panels

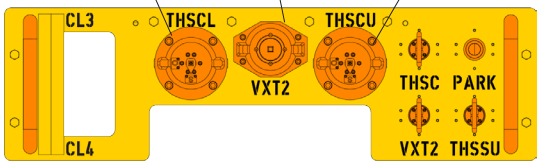

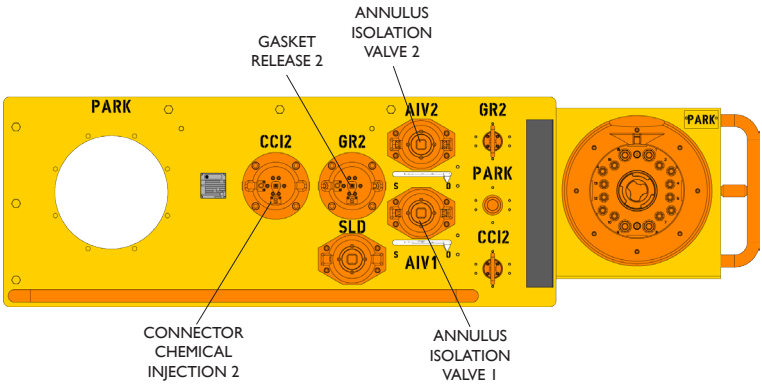

4.4 Tubing Head Spool Data Table

Specifications	
Lower Connection:	18-3/4" HT-H4 Connector
Upper Connection:	18-3/4" H4 Mandrel Profile
Working Pressure	69 MPa (10,000 psi)
Weight:	35,980 Kg
Overall Width x Length x Height:	3502mm (138.9") x 6602mm (259.92") x 3424mm (134.80")

Design parameter	Value	Equivalent
Design pressure	10.000 psi	69 MPa
Design Temperature (Upstream of Choke)	0/+266 °F	-18/+130 °C
Design Temperature (Downstream of Choke)	-20/+266 °F	-29/+130 °C
Material Class	Production Bore EE-NL	Annulus Bore EE-NL
Design Life	40 years	

Function	IDENT	Interface	Direction to Close	Valve Bore Size	Expected No. of Turns	Nominal Torque ft-lbs (Nm)
Annulus Isolation Valve 1	AIV1	ISO 13628-8 Rotary Class 4 1 1/2" Square	Clockwise	2-1/16"	17 1/4	22-356 (29-482)
Annulus Isolation Valve 2	AIV2	ISO 13628-8 Rotary Class 4 1 1/2" Square	Clockwise	2-1/16"	17 1/4	22-356 (29-482)
Gasket Release 2	GR2	ISO-13628-8 Rotary Class 2 11/16" Square	Clockwise	1/2"	3/4	100-200 (136-271)
Connector Chemical Injection 2	CCI2	ISO 13628-8 Type B Dual Port Hot Stab	Clockwise	1/2"	3/4	100-200 (136-271)
THS Connector Lock	THSCL	ISO-13628-8 Rotary Class 2 11/16" Square	Clockwise	1/2"	3/4	100-200 (136-271)
THS Connector Unlock	THSCU	ISO-13628-8 Rotary Class 2 11/16" Square	Clockwise	1/2"	3/4	100-200 (136-271)
THS Connector Lock/Unlock	THSC	ISO 13628-8 Type B Dual Port Hotstab	N/A	N/A	N/A	N/A
THS Secondary Unlock	THSSU	ISO 13628-8 Type B Dual Port Hotstab	N/A	N/A	N/A	N/A
VX Gasket Test 2	VXT2	ISO-13628-8 Rotary Class 2 11/16" Square	Clockwise	1/2"	3/4	100-200 (136-271)
Cutting Loop 3	CL3	Cutting Tool	N/A	N/A	N/A	N/A
Cutting Loop 4	CL4	Cutting Tool	N/A	N/A	N/A	N/A
MQC HFL Park	Park	FLX360 Tool	N/A	N/A	N/A	N/A
EFL Parking	Park E7 E8	D Type Handle	N/A	N/A	N/A	N/A
Secondary Lock Down	SLD	ISO-13628-8 Class 4 (1-1/2" x 1-1/4" ACME Drive)	Clockwise	N/A	23.5	20-80 (27-108)

5 Tubing Hanger System

5.1 Tubing Hanger (TH) General Arrangement

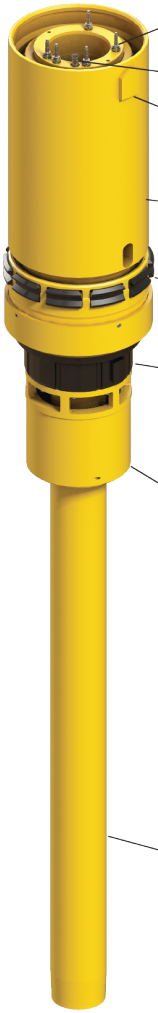

5.2 TH Cross Section

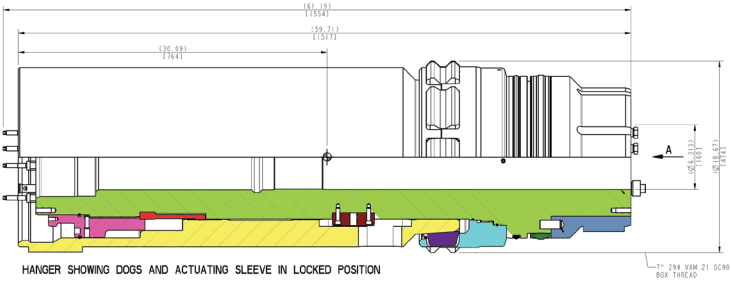

HANGER SHOWING DOGS AND ACTUATING SLEEVE IN LOCKED POSITION

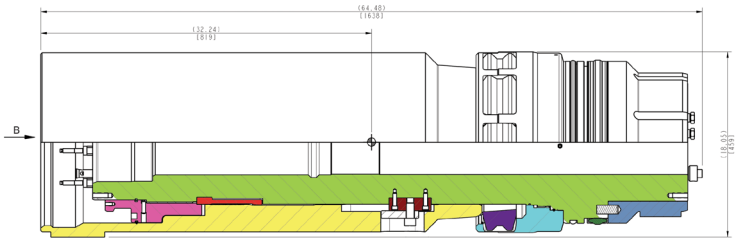

HANGER SHOWING DOGS AND ACTUATING SLEEVE IN UNLOCKED POSITION
C/W SHIPPING KEY

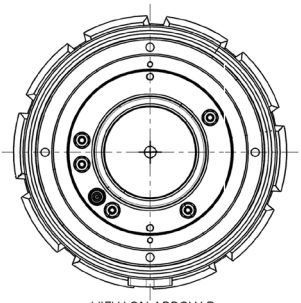

VIEW ON ARROW B

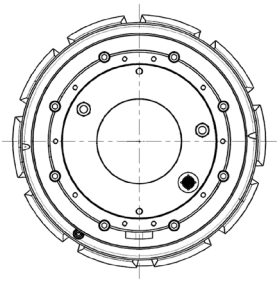

VIEW ON ARROW A

5.3 TH Data Table

Tubing Hanger	
Pressure Rating	69 MPa (10,000 psi) Working / 103.4 MPa (15,000 psi) Test
Production Bore Thread	7" 29# VAM 21 Box Thread
Installation Configuration	Passive orientation by THRT
Design Life	40 years minimum; electrical life 25 years
Penetrations	2 off Downhole Hydraulic Lines 12.500 psi (862 bar) rated for use as SSSV's 1 off Downhole Electrical Penetration (Diamould - Top Seawell 01 Wt Mate Receptacle; Bottom Sealite Dry Mate (installed as mandrel assembly)) 1 off TH Seal Test (Partial Penetration) 1 off Land Indicator (Partial Penetration) 1 off Lock Indicator (Partial Penetration)
Running Profile Capacity	1,000,000 lbs (454 tonnes)
Material Service	HH
Temperature Range	-18 °C to 155 °C (HT-SG Seal rated to 148 °C)
Weight	1322 kg (2914 lbs)
Overall length (unlocked and including Retention Dogs when locked)	1638 mm (64.48") (excluding free issue pup joint)
Overall Diameter (not including retention dogs when locked)	447 mm (17.613")
Min Bore	6.313" (160mm)

5.4 Tubing hanger Running Tool (THRT)

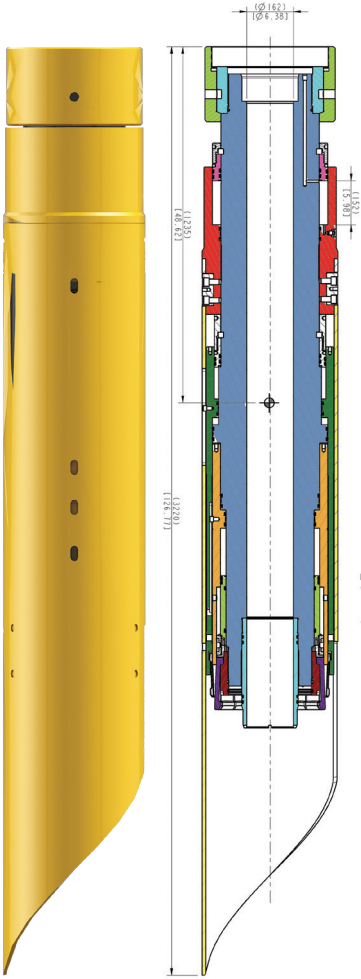

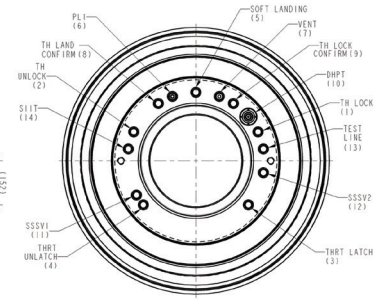

TOP VIEW

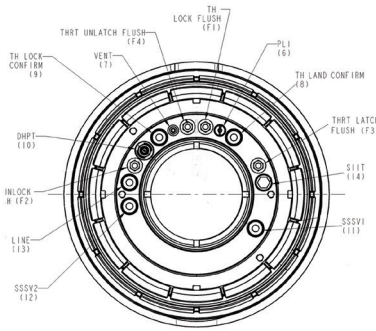

BOTTOM VIEW

5.5 THRT Data Table

Tubing Hanger Running Tool	
THRT min bore	162mm (6-3/8")
Pressure Rating (Main Bore)	69 MPa (10,000 psi) Working
Control Line MWP	89 MPa (12,500psi)
Temperature Range	0-250 F (-18 °C - 121 °C)
Top Connection	16"- 3 TPI RH MOD SQ THD
Tool Hydraulic Functions (top)	13 off 9/16 x ½" Bridging Nipples
Tool Electrical Functions (top)	1 off Diamould Wet Mate Receptacle
Tool Hydraulic Functions (Bottom)	5 off 1/4" Female National Couplers
Tool Electrical Functions (Bottom)	1 off Diamould wet mate plug
Running Capacity (0psi)	1,000,000 lbs. (454 Tonnes)
Length	3061 mm (120.75") [126.77" (3220mm) with Soft Land pressurized]
Diameter	470 mm (18.5")
Weight	Approx. 5,111 lbs (2,319 kg)
Maximum Gross Weight	5,000 kg (11,023 lbs)
Pressure Rating (THRT Function lines)	34.5 MPa (5000psi)
Pressure Rating (TH Test Line)	69 MPa (10000psi)

5.6 Tubing Hanger Tools

TUBING HANGER RUNNING TOOL
HANDLING AND TEST TOOL

TH HANDLING/ TEST TOOL

TUBING HANGER RUNNING TOOL

EMERGENCY RECOVERY TOOL

5.7 Corrosion Cap

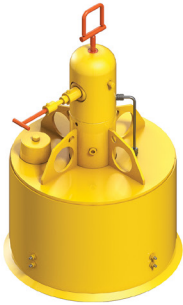

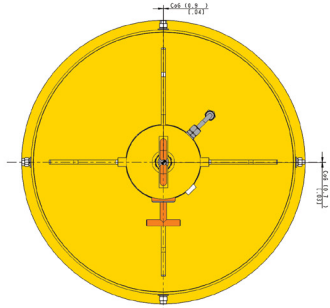

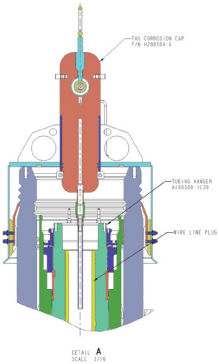

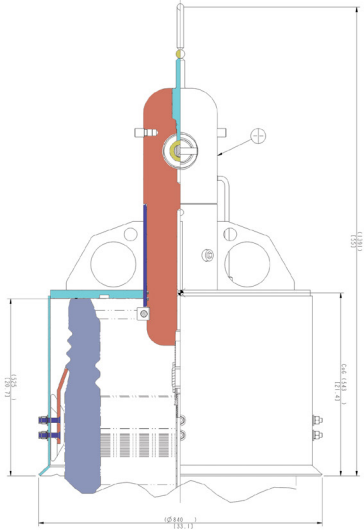

6 Xmas Tree System

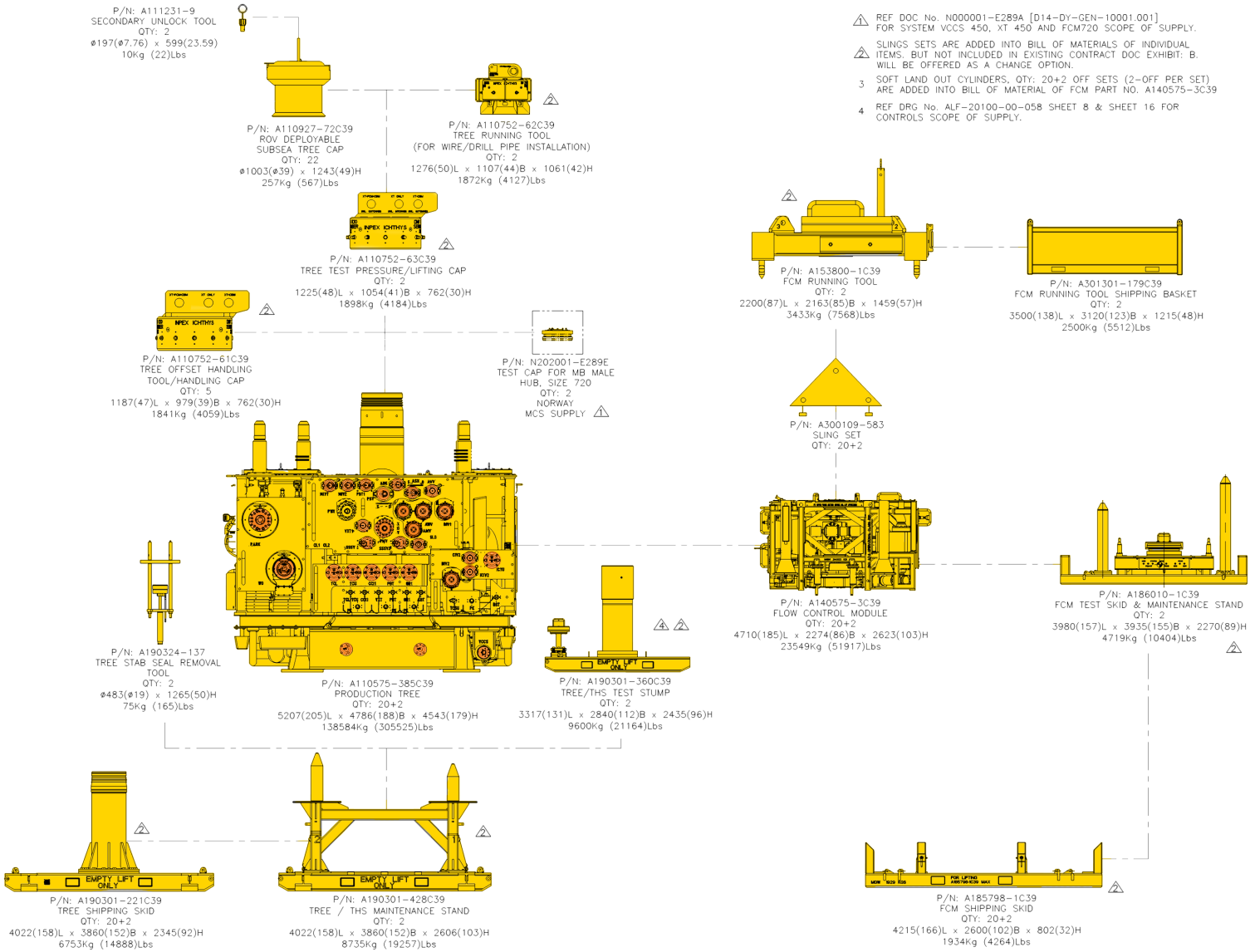

6.1 Xmas Tree (XT) General Arrangement

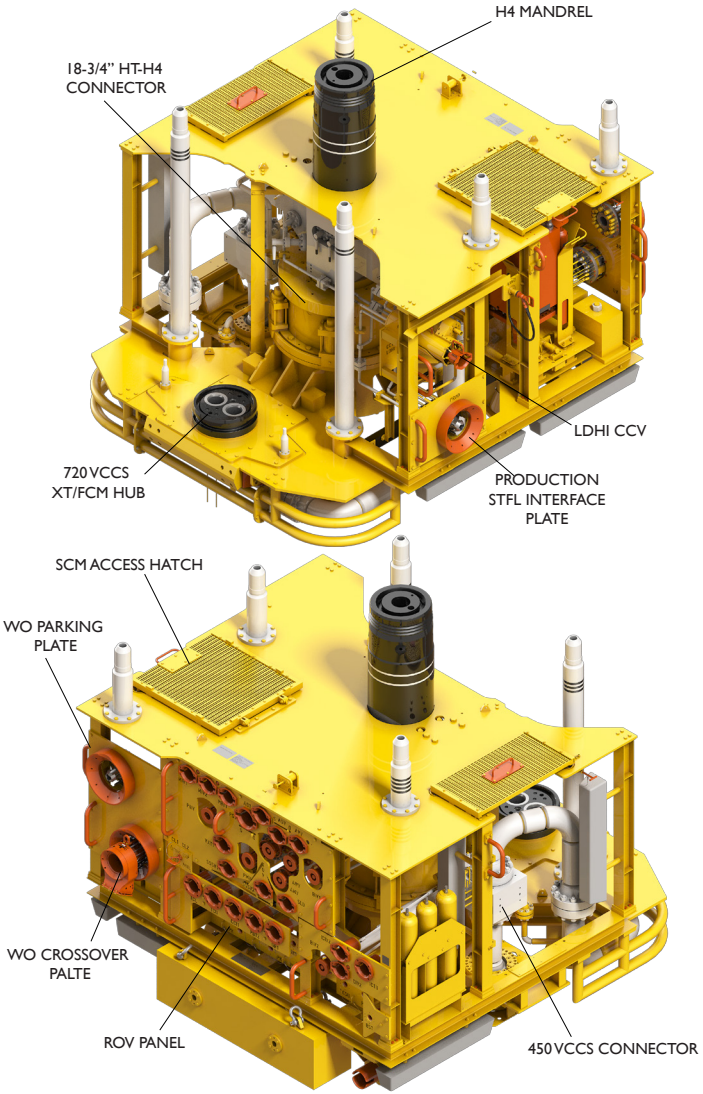

6.2 XT Schematic

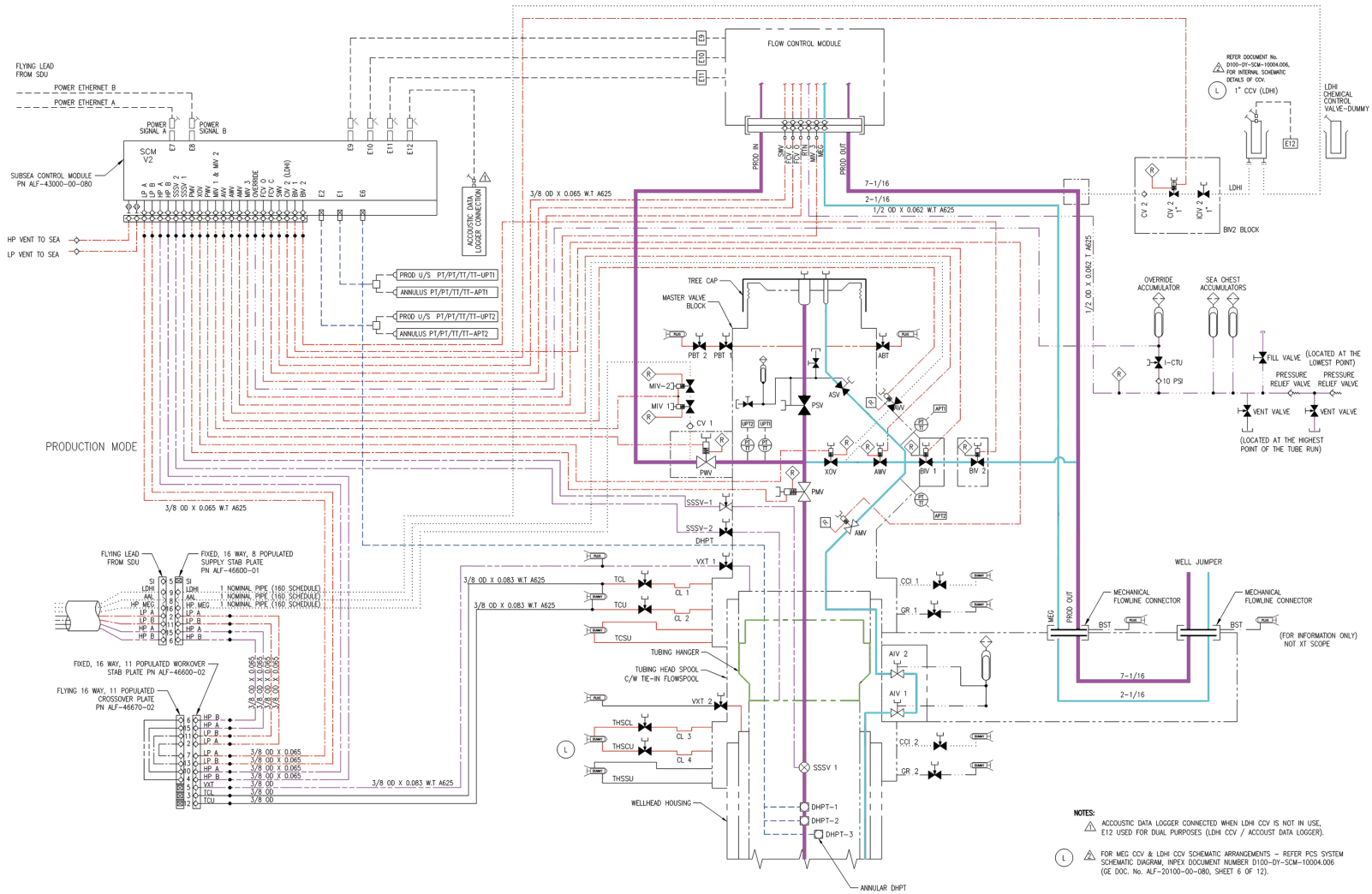

6.3 Flow Control Module (FCM) General Arrangement

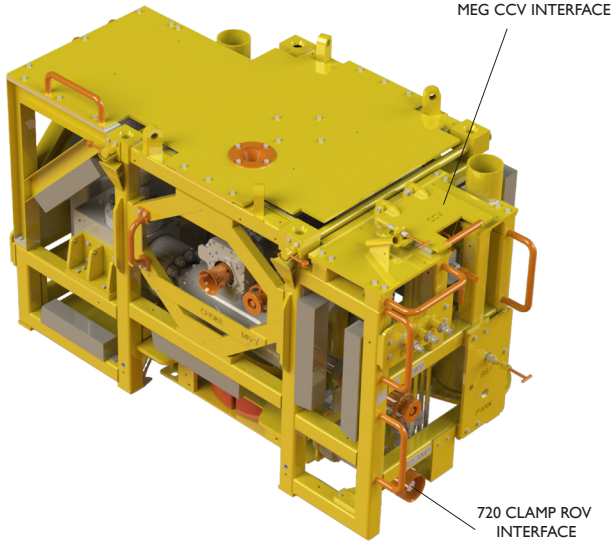

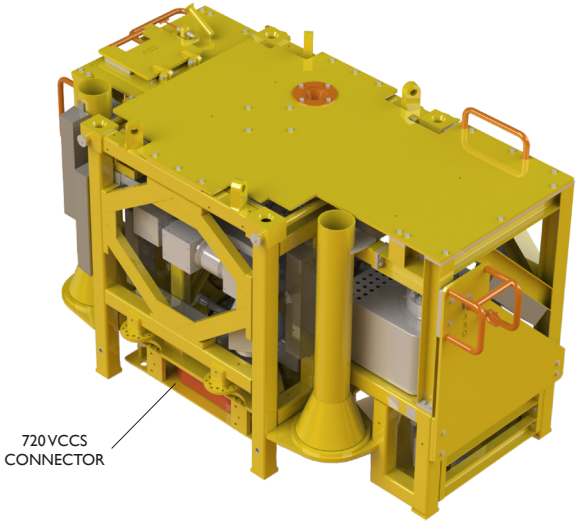

6.4 FCM Schematic

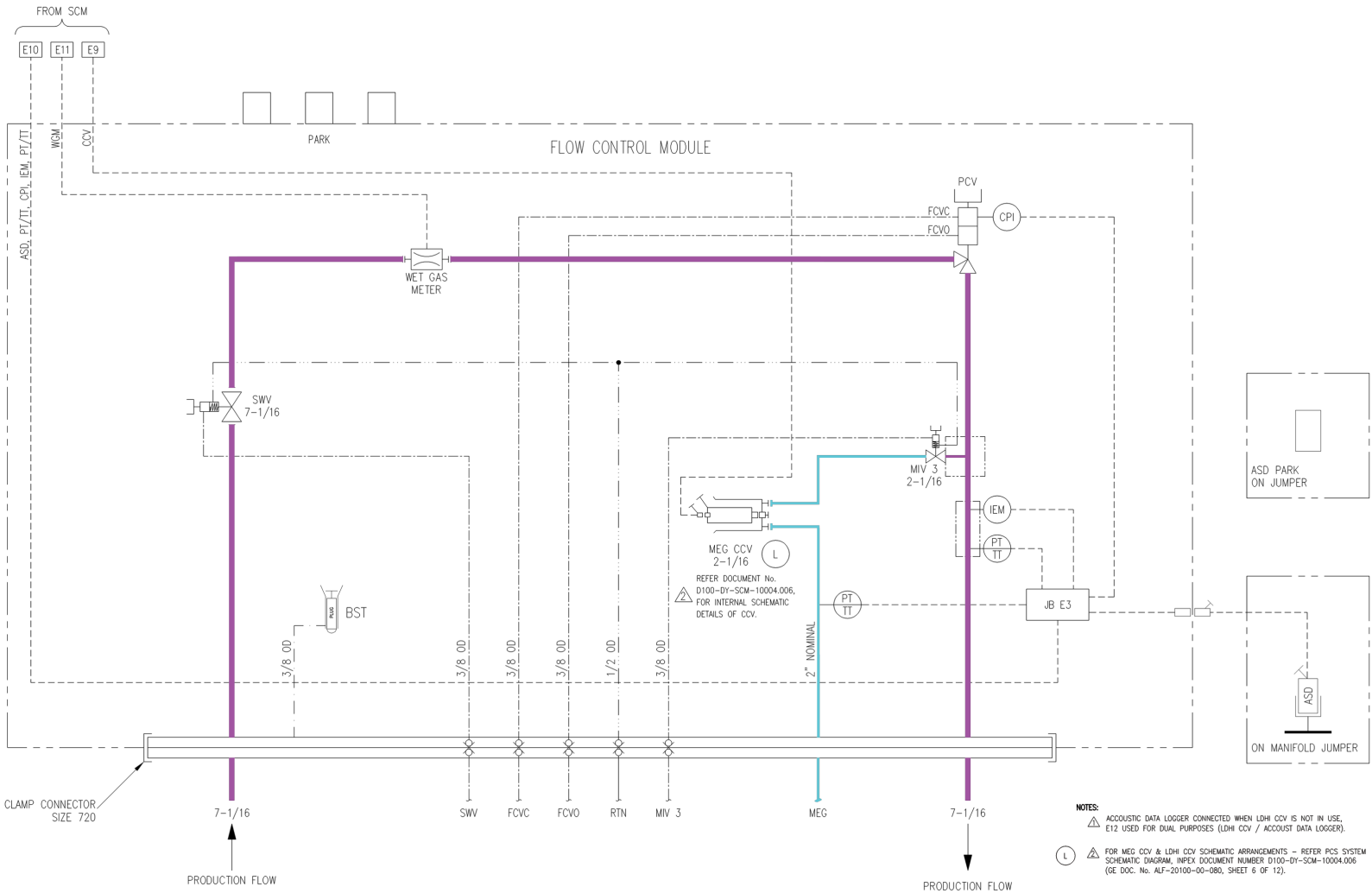

6.5 FCM ROV Panels

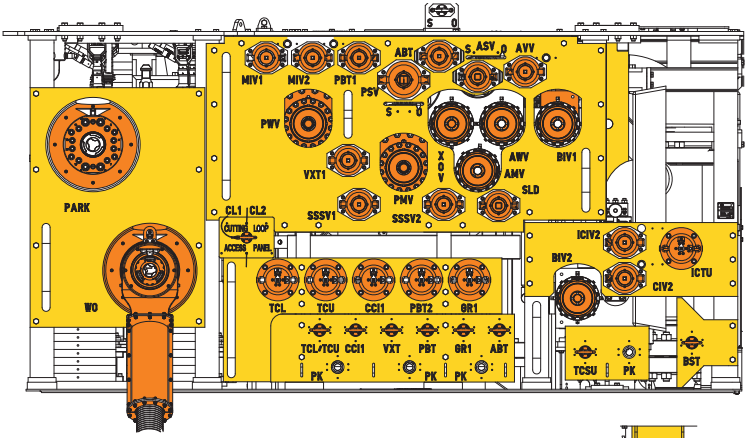

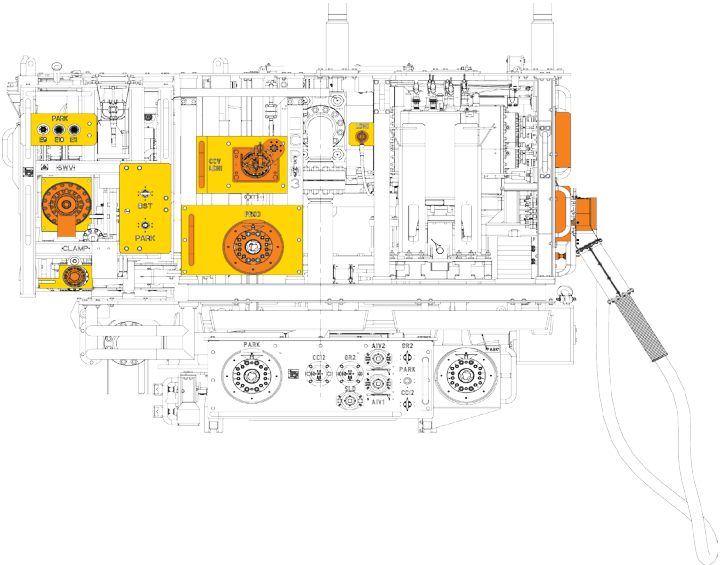

6.6 XT Data Table

XT, ROV Interfaces

Function	Des.	Interface	Direction to Close	Valve Bore Size	Expected No Turns Linear Travel	Torque (Nominal-Maximum Nm (ft-lb)
Production Master Valve	PMV	Linear override, ISO 13628-8, Type B	Linear push	7-1/16”	219 mm (8.62”)	N/A
Production Wing Valve	PWV	Linear override, ISO 13628-8, Type B	Linear push	7-1/16”	219 mm (8.62”)	N/A
Annulus Master Valve	AMV	ISO-13628-8 Type B Linear Override with extension	Linear push	2-1/16”	73 mm (2.88”)	N/A
Annulus Wing Valve	AWV	ISO-13628-8 Type B Linear Override with extension	Linear push	2-1/16”	73 mm (2.88”)	N/A
Cross Over Valve	XOV	ISO-13628-8 Type B Linear Override with extension	Linear push	2-1/16”	73 mm (2.88”)	N/A
MEG Injection Valve 1	MIV 1	ISO-13628-8 Class 2 Rotary Override	Clockwise	1”	5	206 - 270 (152 - 200)* *limited by ROV Bucket
MEG Injection Valve 2	MIV 2	ISO-13628-8 Class 2 Rotary Override	Clockwise	1”	5	206 - 270 (152 - 200)* *limited by ROV Bucket
Production Swab Valve	PSV	ISO-13628-8 Class 5 Rotary	Clockwise	7-1/16”	51.75	74 - 3136 (55 - 2313) (Nominal running to full working)
Annulus Swab Valve	ASV	ISO-13628-8 Class 4 Rotary	Clockwise	2-1/16”	17.25	29 - 482 (22 - 356) (Nominal running to full working)
Annulus Vent Valve	AVV	ISO-13628-8 Class 2 Rotary Override	Clockwise	1”	5	206 - 270 (152 - 200)* *limited by ROV Bucket
Bypass Isolation Valve 1	BIV1	Linear override, ISO 13628-8, Type B with extension	Linear Push	2-1/16”	73 mm (2.88”)	N/A

Function	Des.	Interface	Direction to Close	Valve Bore Size	Expected No Turns Linear Travel	Torque (Nominal-Maximum Nm (ft-lb)
Bypass Isolation Valve 2	BIV2	Linear Override, ISO 13628-8, Type B with extension	Linear Push	2-1/16"	73 mm (2.88")	N/A
Production Bore Test Valve 1	PBT1	ISO-13628-8 Class 2 Rotary	Clockwise	1/2"	3/4	135- 270 (100 - 200)
Production Bore Test Valve 2	PBT2	ISO-13628-8 Class 2 Rotary	Clockwise	1/2"	3/4	135- 270 (100 - 200)
Production Bore Hot Stab	PBT	ISO 13628-8, type B	N/A	N/A	N/A	N/A
Annulus Bore Test Valve	ABT1	ISO-13628-8 Class 2 Rotary	Clockwise	1/2"	3/4	135- 270 (100 - 200)
Annulus Bore Test Stab	ABT	ISO 13628-8, type B	N/A	N/A	N/A	N/A
Surface Controlled Subsea Safety Valve 1	SSSV1	ISO-13628-8 Class 2 Rotary	Clockwise	1/2"	3/4	135- 270 (100 - 200)
Surface Controlled Subsea Safety Valve 2	SSSV2	ISO-13628-8 Class 2 Rotary	Clockwise	1/2"	3/4	135- 270 (100 - 200)
Gasket Release Valve	GR1	ISO-13628-8 Class 2 Rotary	Clockwise	1/2"	3/4	135- 270 (100 - 200)
Gasket Release Hot Stab	GR1	ISO 13628-8, type B	N/A	N/A	N/A	N/A
Chemical Injection Valve 2	CIV2	ISO-13628-8 Class 2 Rotary Override	Clockwise	1"	5	152 - 200* (206 - 270) *limited by ROV Bucket
Isolation Chemical Injection Valve 2	ICIV2	ISO-13628-8 Class 2 Rotary	Clockwise	1"	10.25	100 - 150 (135 - 203)
VX Test Valve	VXT1 (on Main ROV Panel)	ISO-13628-8 Class 2 Rotary	Clockwise	1/2"	3/4	135 - 270 (100 - 200)

Function	Des.	Interface	Direction to Close	Valve Bore Size	Expected No Turns Linear Travel	Torque (Nominal-Maximum Nm (ft-lb)
VX Test Hot Stab	VXT (on parking receptacle)	ISO 13628-8, type B	N/A	N/A	N/A	N/A
Tree Connector Lock	TCL	ISO-13628-8 Class 2 Rotary	Clockwise	1/2”	3/4	135 - 270 (100 - 200)
Tree Connector Unlock	TCU	ISO-13628-8 Class 2 Rotary	Clockwise	1/2”	3/4	135- 270 (100 - 200)
Tree Connector Lock/Unlock Hot Stab	TCL/ TCU	ISO 13628-8, type B	N/A	N/A	N/A	N/A
Tree Connector Secondary Unlock Hot Stab	TCSU	ISO 13628-8, type B	N/A	N/A	N/A	N/A
Return Accumulator Top-up	I-CTU	ISO-13628-8 Class 2 Rotary	Clockwise	1/2”	3/4	135 - 270 (100 - 200)
Secondary Lock Down	SLD	ISO-13628-8 Class 4 Rotary	Clockwise to engage	N/A	On Stump 20.5 - 22.5 Off Stump 26.5 - 28.5	27 - 108 (20 - 80)
Connector Chemical Injection 1	CCI 1	ISO-13628-8 Class 2 Rotary	Clockwise	1/2”	3/4	135 - 270 (100 - 200)
SCM	Mini Posts	RCR Tool	N/A	N/A	N/A	N/A

FCM, ROV interfaces

Function	Des.	Interface	Direction to Close	Valve Bore Size	Expected No Turns Linear Travel	Torque (Nominal-Maximum Nm (ft-lb)
Sacrificial Wing Valve override	SWV	ROV Tool Linear Override ISO 13628-8 Type B	Linear Push	7-1/16"	219 mm (8.62")	N/A
Prod. Choke Valve Override	CHOKE	ROV TT ISO 13628-8 Class 4	CW	7-1/16"	8.5	Max: 339 Nm (250 ft-lb)
MIV 3 Override	MIV 3	ROV Tool Linear Override ISO 13628-8 Type B	Linear Push	2-1/16"	73 mm (2.88")	N/A
Back Seal Test	BST	ROV Hot Stab ISO 13628-8 Type B	N/A	N/A	N/A	N/A
MEG CCV replace	CCV	ROV TT ISO 13628-8 Class 4	CW	N/A	8-3/4 (+/- 1/4)	Make: 610 Nm (450 ft-lb) Break: 677 Nm (500 ft-lb) Max: 745 Nm (550 ft-lb)
720 Clamp Connector	CLAMP	ROV TT ISO 13628-8 Class 5 Rotary Override	CW	N/A	N/A	4300 Nm (3172 ft-lbs)

XT, General Data

Parameter	Description
Pressure Rating:	69 MPa MWP (10,000 psi) rated
Tree Type:	7" x 2" (179 mm x 52 mm) Concentric Bore Conventional
Weight:	64,079 kg (141,271 lbm)
Tree Height:	178.86 (4,543 mm)
Tree Width:	205.0 (5,207 mm)
Tree Length:	203.91" (5179mm)
Upper Connection:	18-3/4" H4 Hub a/f ROV TC
Lower Connection:	18-3/4 HT-H4 Wellhead Connector
Hydraulically Operated Valves:	PMV, PWV, AMV, XOV, AWV, BIV1, BIV2, AVV, MIV1, MIV2, CIV2
Manually Operated Valves:	PSV, ASV, ICIV2, CCI1, GR1, TCL, TCU, PBT1, PBT2, ABT1, VXT1, SSSV, SSSV-2, I-CTU
Material Service Rating	HH (Production) / EE (Annulus)
Temperatur Rating	Upstream of Choke,-18 deg C / 155 deg C Downstream of Choke, -29 deg C / 155 deg C
Interfacing equipment list	4 x PT/TT sensors, EFTS (DHPT), LDHI CCV
Electrically Operated Valves	CCV
Design Life	40 Years, Electrical Equipment 25 years

FCM, General Data

Flow Control Module (FCM)	
Pressure Rating:	69 MPa (10,000 psi) MWP rated
Flow Line sizes:	7-1/16" (179.4 mm) Production, 2" Nom. (50.8 mm) MEG
Weight:	23,495 kg (51,789 lbm)
Height of FCM:	103.3" (2,623 mm)
Width of FCM:	185.4" (4,710 mm)
Depth of FCM:	91" (2,315 mm)
Upper Connection:	N/A
Lower Connection:	720 multi-bore hub C/W Clamp Connector
Hydraulically Operated Valves:	SWV, MIV3, FCV
Electrically Operated Valves:	MEG CCV
Sensors:	Intrusive Erosion Detector, Wet Gas Meter, Choke Position Indicator, 2x PT/TT.
Temperature Rating	Upstream of Choke,-18 deg C / 155 deg C Downstream of Choke, -29 deg C / 155 deg C
Material Service	HH (Production) / EE (Service)
Design Life	40 years, Electrical Equipment 25 years

6.7 ROV Deployable Tree Cap

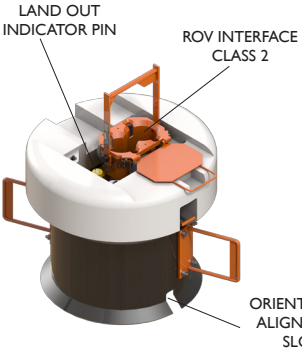

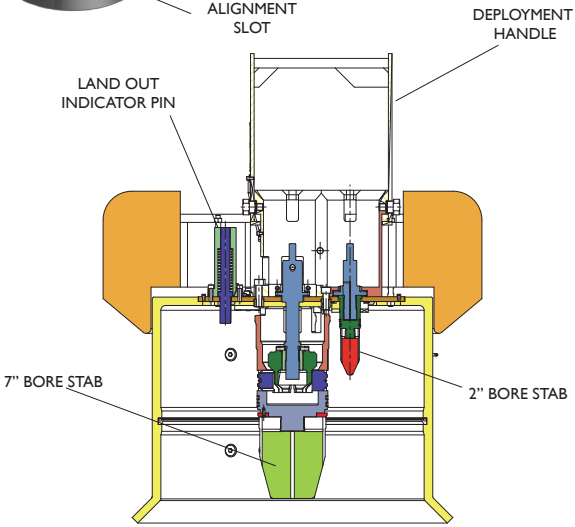

ROV Deployable Tree Cap	
Height	1243mm (48.94")
Diameter	1374mm (54")
Weight	272 kg (600 lb
Weight with 10% contingency	283 kg
Pressure	69.0 MPa (10,000 psi)
Temperature	-18 / 121 deg C (0/250 deg F)
Material Service	HH
Design Life	40 years

6.8 XT Deployment Plate

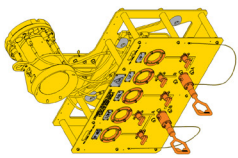

ISO VIEW
(DO NOT SCALE)

NOTES:

1. UNIT TO BE ASSEMBLED AS DETAILED WITHIN THIS GENERAL ASSEMBLY DRAWING. REFER TO TABLE 2; SHEET 2 FOR COUPLER CONFIGURATION.
2. REFER TO INTERFACE DRAWINGS FL-1360-00-072 AND ALF-456690-0-072 FOR OPERATING AND HANDLING INFORMATION.
3. ASSEMBLY TO BE TESTED IN ACCORDANCE WITH ACCEPTANCE PROCEDURE ALF-456850-00-200.
4. UNIT TO BE OPERATED AND HANDLED IN ACCORDANCE WITH THE INSTRUCTIONS IN THE USER MANUALS ALF-456850-00-080 AND 500600-00-080.
5. DURING HANDLING, ASSEMBLY AND TRANSPORTATION CARE MUST BE TAKEN NOT TO DAMAGE ANY SURFACE COATINGS. ANY DAMAGE SHALL BE REPAIRED IN ACCORDANCE WITH THE RELEVANT SPECIFICATION AS DETAILED IN THE 6PMS PART PROCESS DATA FOR THE ITEM TO WHICH DAMAGE HAS OCCURRED.
6. IDENT PLATE TO BE LABELLED WITH THE FOLLOWING INFORMATION:
   PROJECT PART NUMBER ;
   ISSUE,
   SERIAL NUMBER
7. COAT MATING PARTS WITH WATER RESISTANT GREASE ITEM [5]. COAT PROTRUSIONS WITH WATER RESISTANT GREASE ITEM [5] WITH WATER RESISTANT GREASE ITEM [5].
8. FASTENERS TO BE TORQUE TI OUTLINED IN ACCORDANCE WITH EPMS PART PROCESS DATA LUGS. FASTENERS TO BE SECURED USING LOCTITE ITEM [6].
9. ALL TAPERED HOLES AND FASTENER MATING FACES ARE TO BE BARE METAL (UNCOATED) TO ENSURE ELECTRICAL CONTINUITY BETWEEN COMPONENTS.
10. ESTIMATED MASS
    IN AIR = 2.4 TONNES
    IN WATER = 263 KG

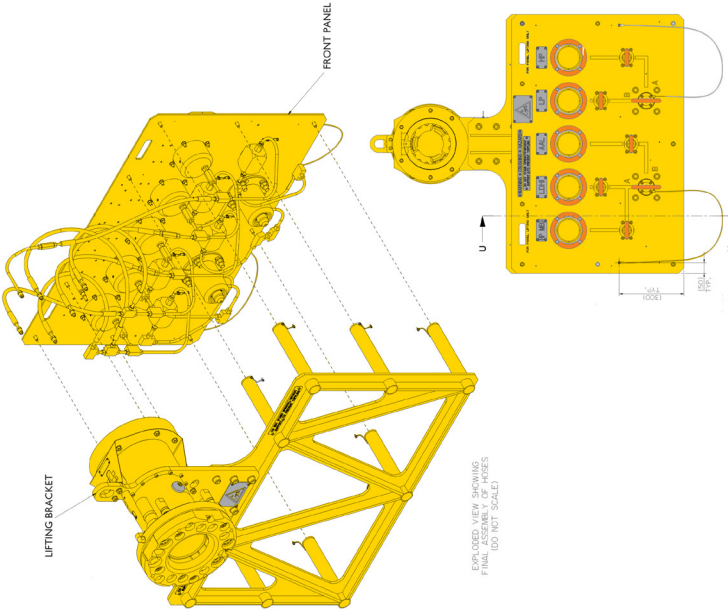

6.9 Xmas Tree System Stack Up

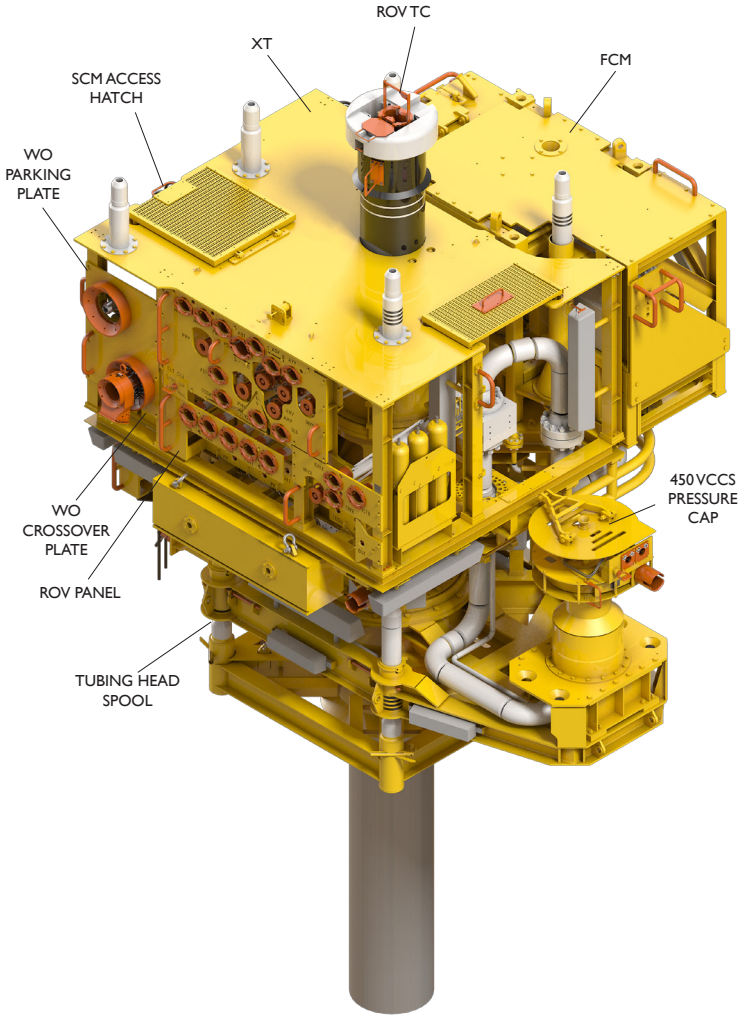

6.10 Xmas Tree System Cross Section

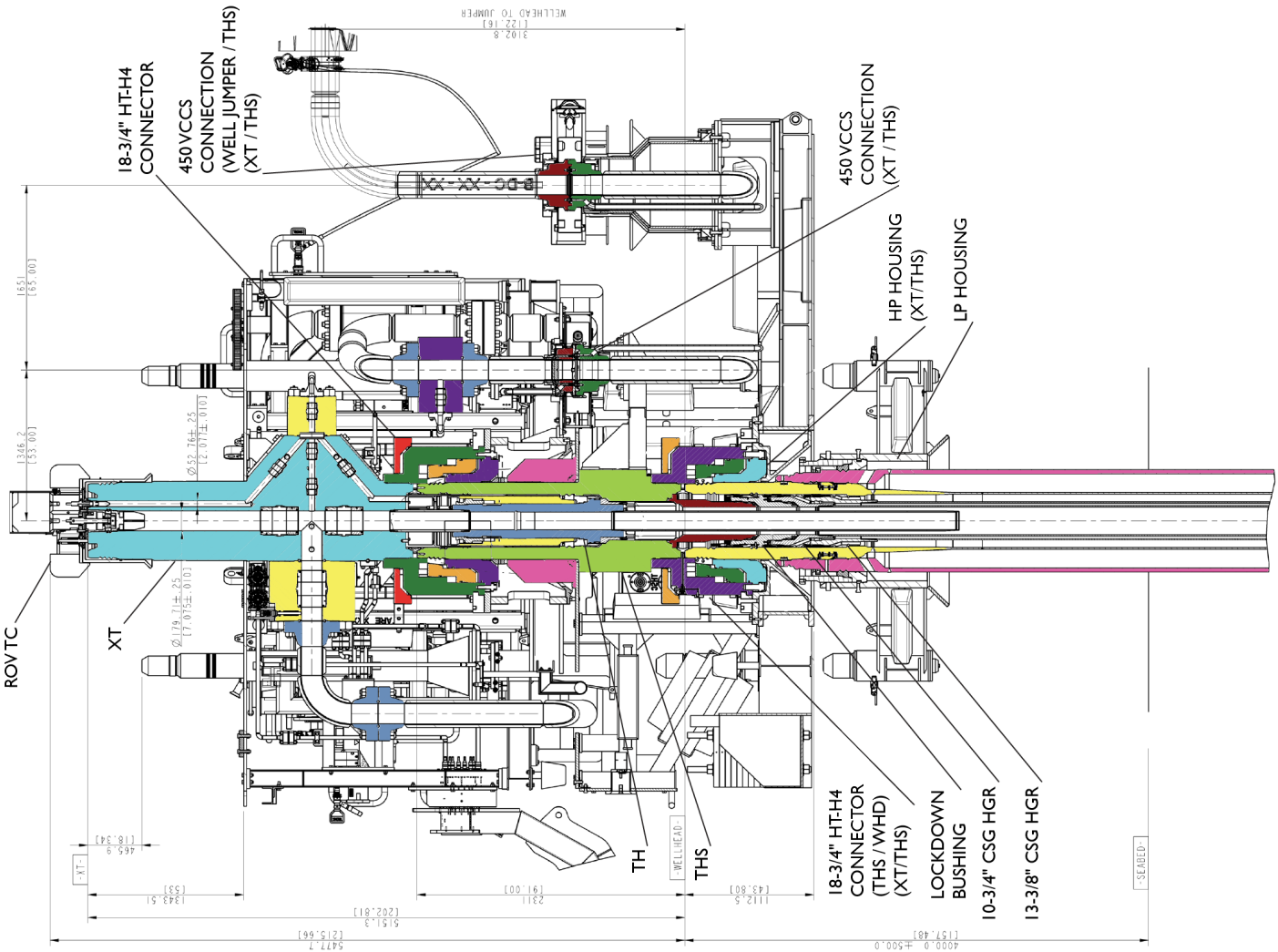

6.11 Acoustic Data Logger

NOTES:
1. OPERATING RANGE -10°C TO +40°C
   STORAGE TEMP. -18°C TO +50°C
3. DESIGN WATER DEPTH - 300M
4. ANODES PROVIDE 5 YEARS PROTECTION SUBSEA
5. FOR INSTALLATION & HANDLING REFER TO ALF-43300-00-205
   [INPEX NO. D150-AJ-IOM-100291]

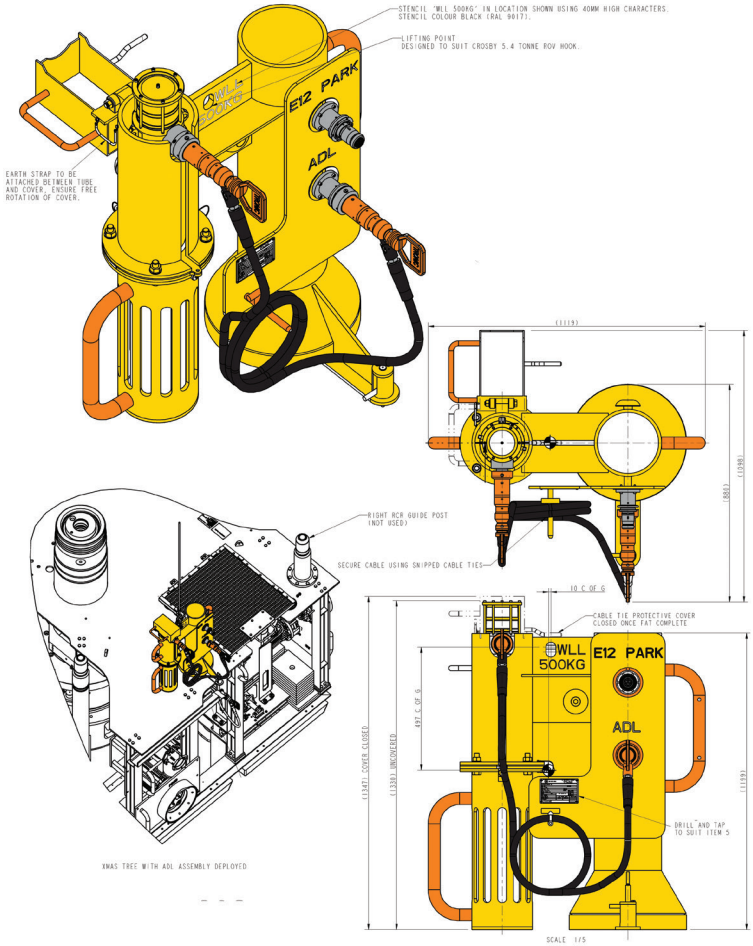

7 IWOCS and CWOR System

7.1 Primary Topside Equipment, Scope of Supply

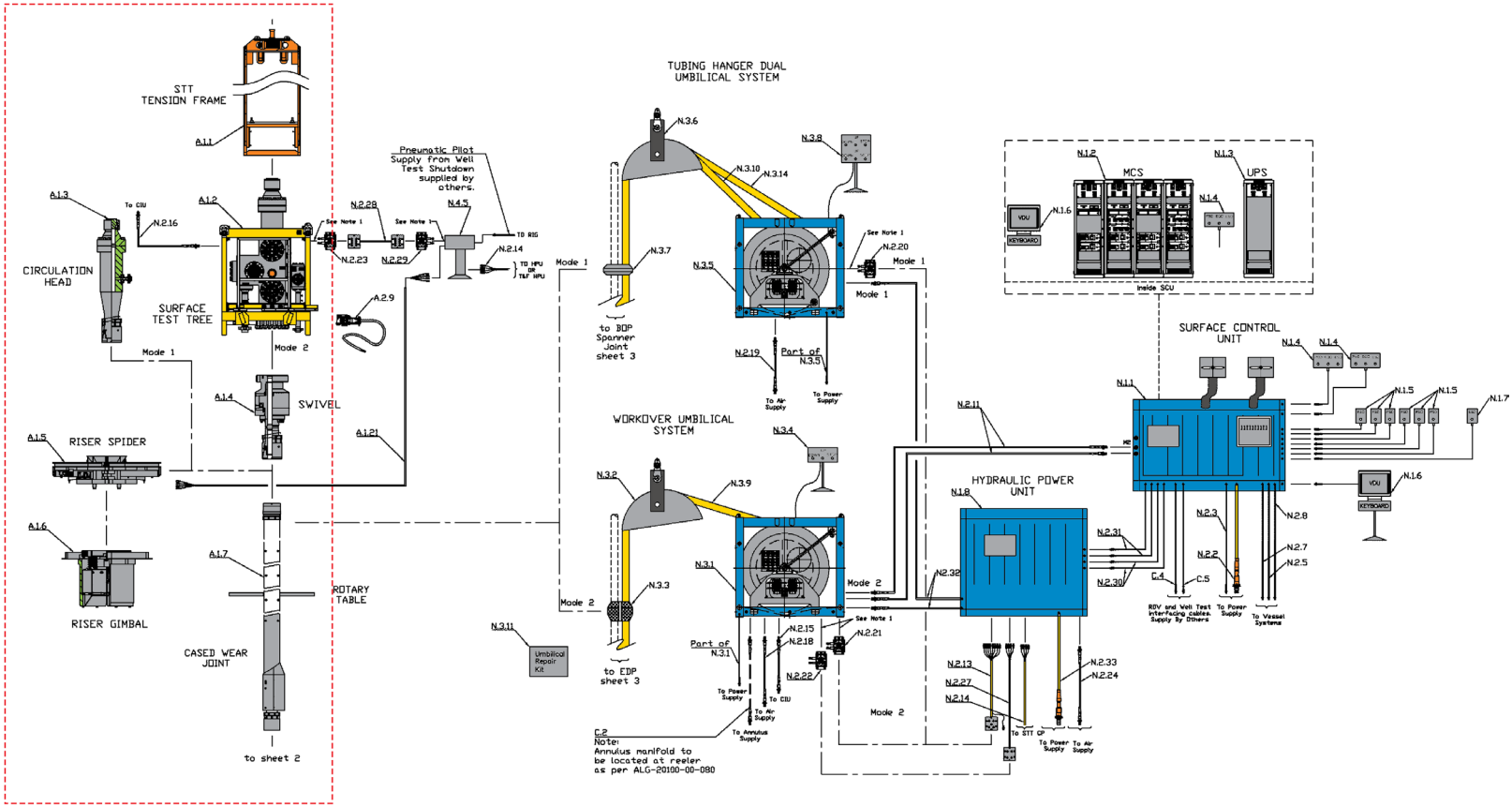

Notes
1. Items integrated into connected unit.
2. Mode 1 denote Tubing hanger running and retrieval mode
3. Mode 2 denote Tree installation and workover mode

7.2 Riser System, Scope of Supply

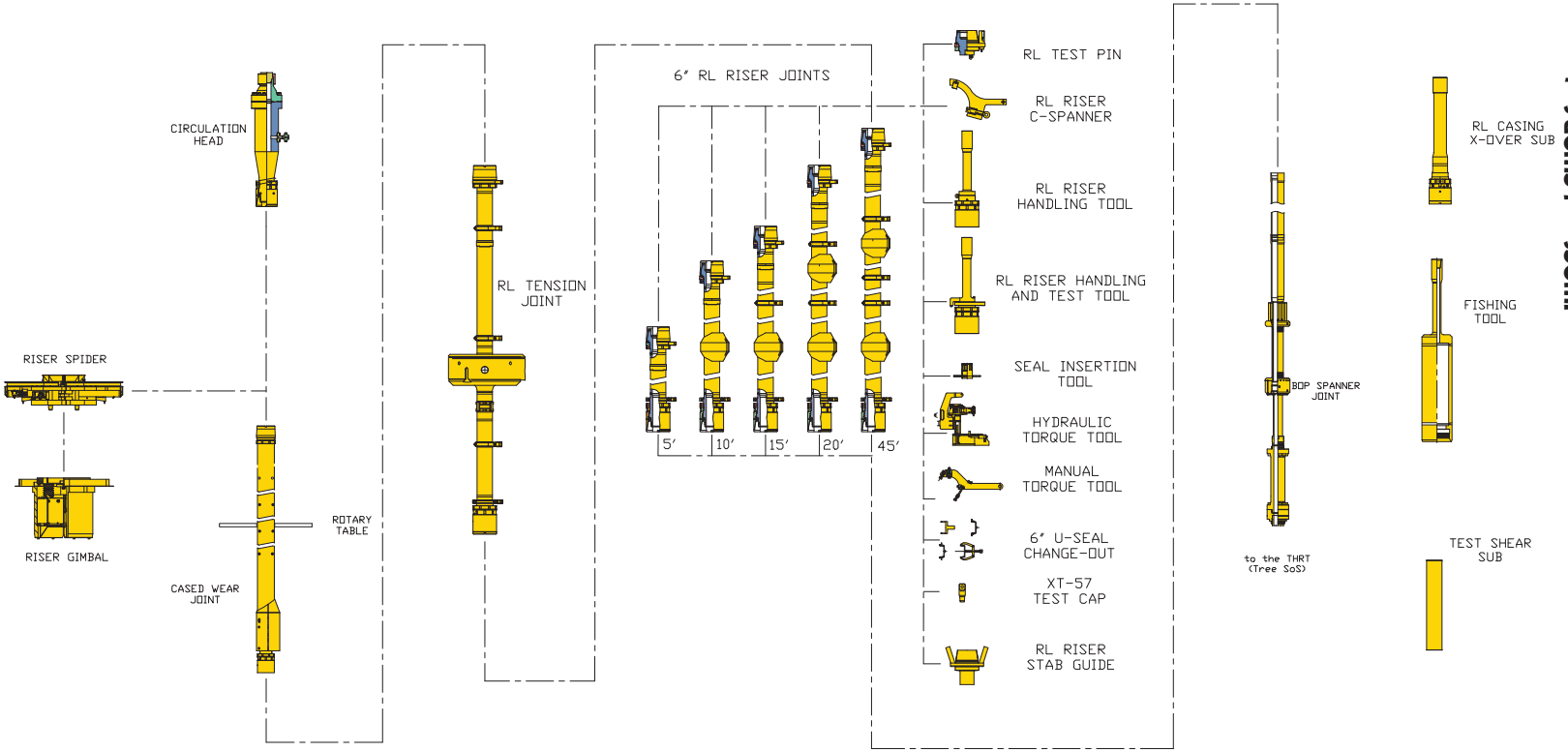

7.3 Workover Intervention Equipment, Scope Of Supply

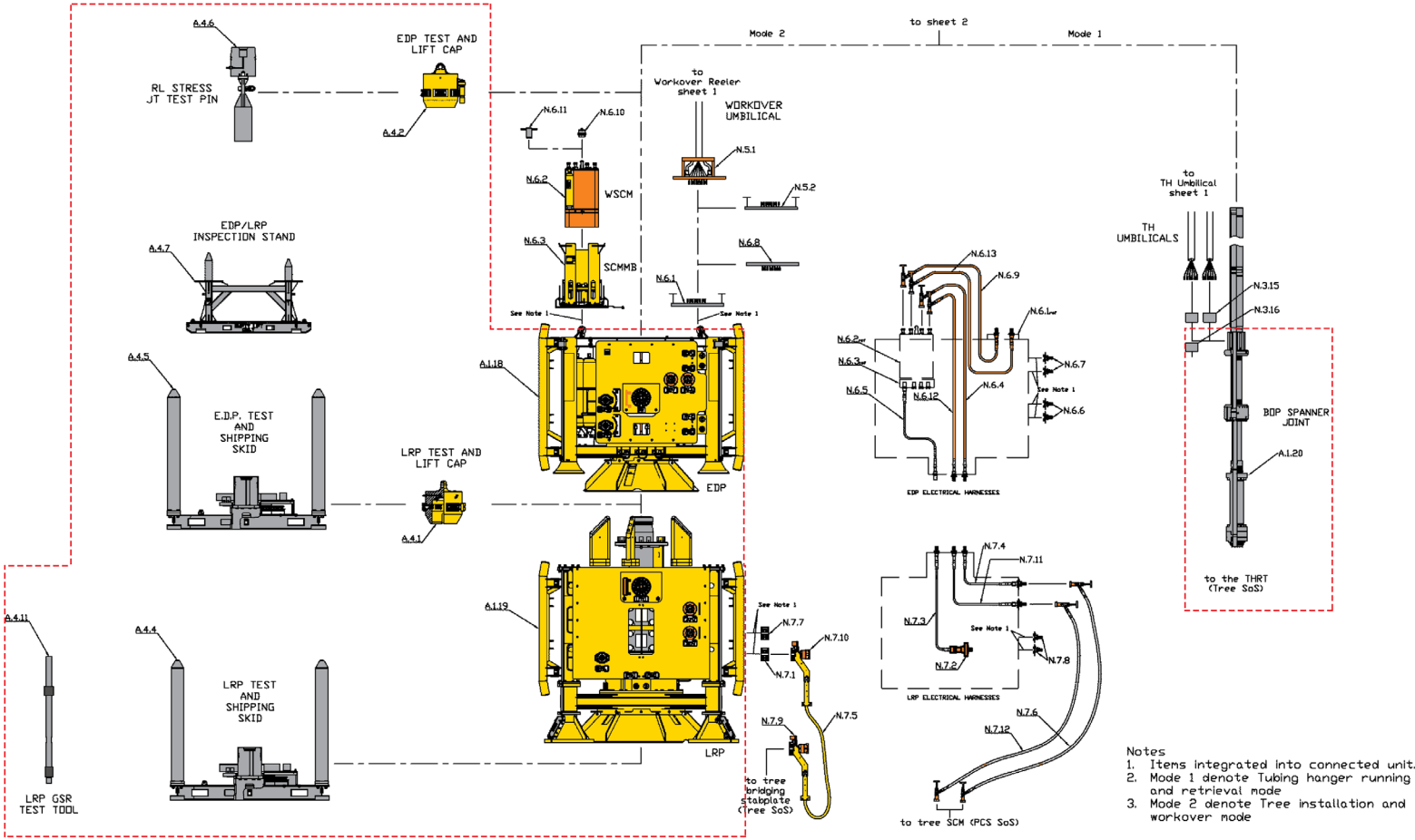

7.4 Miscellaneous Equipment, Scope Of Supply

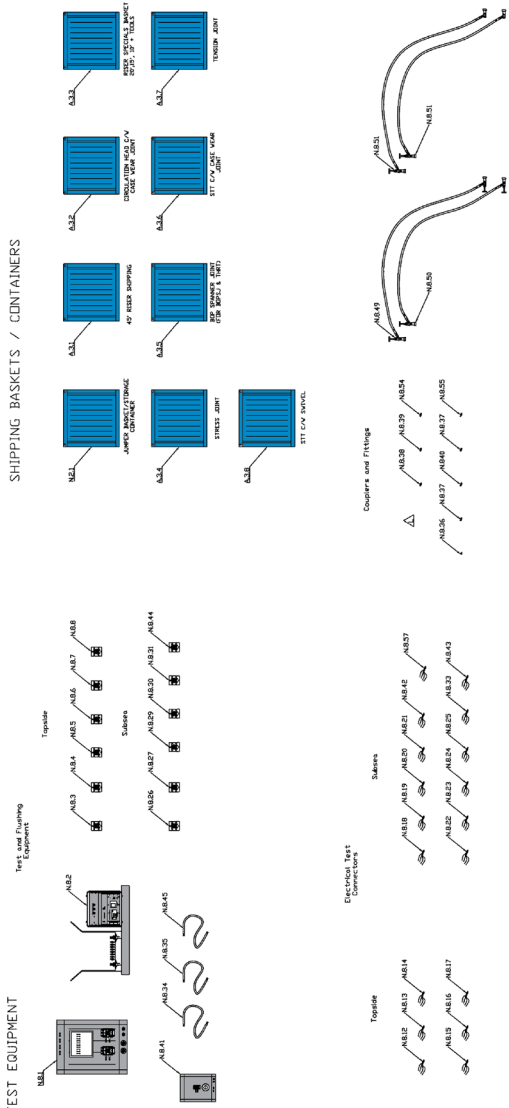

7.5 IWOCS/CWOR Hydraulic Schematic

MODE 1: TUBING HANGER RUNNING / RETRIEVAL

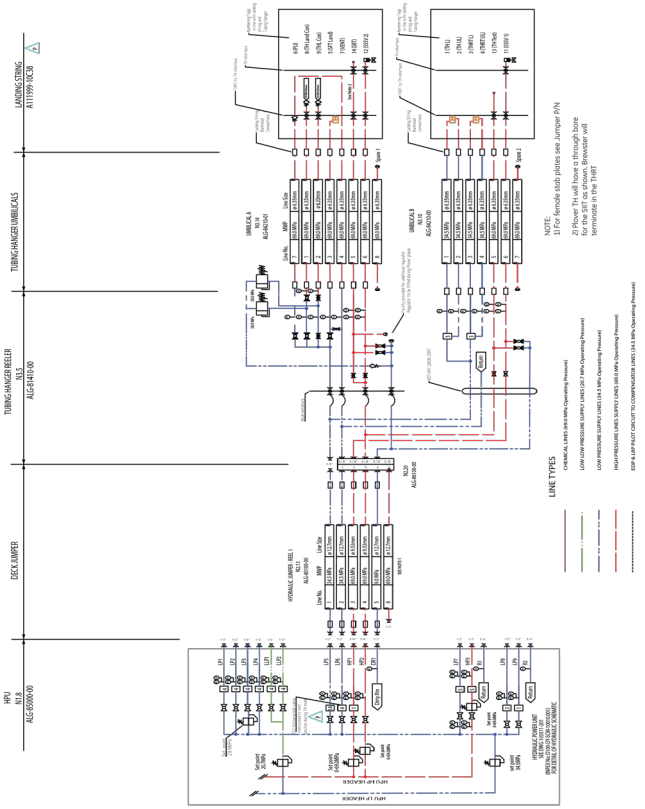

7.6 IWOCS/CWOR Electrical schematic

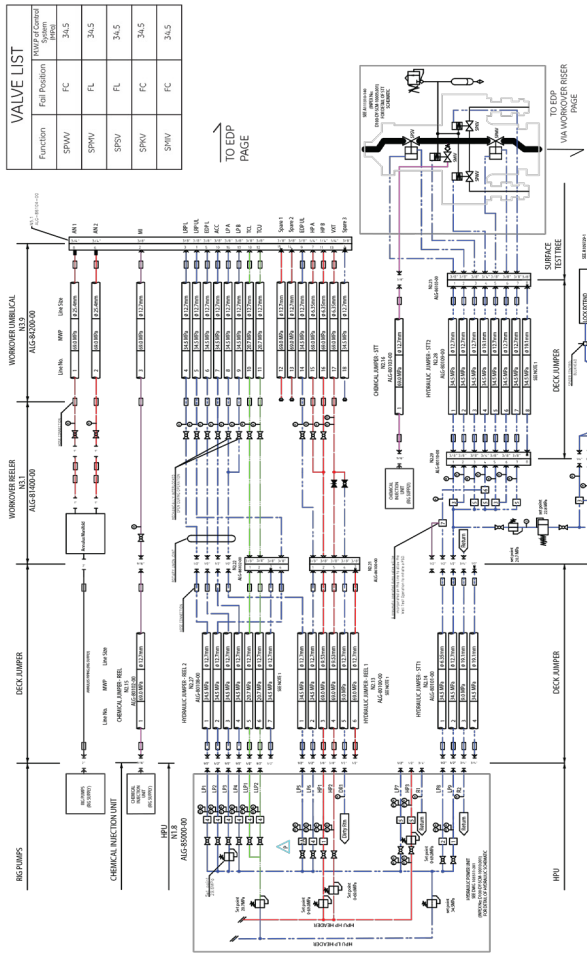

7.7 MCS Comms Interface

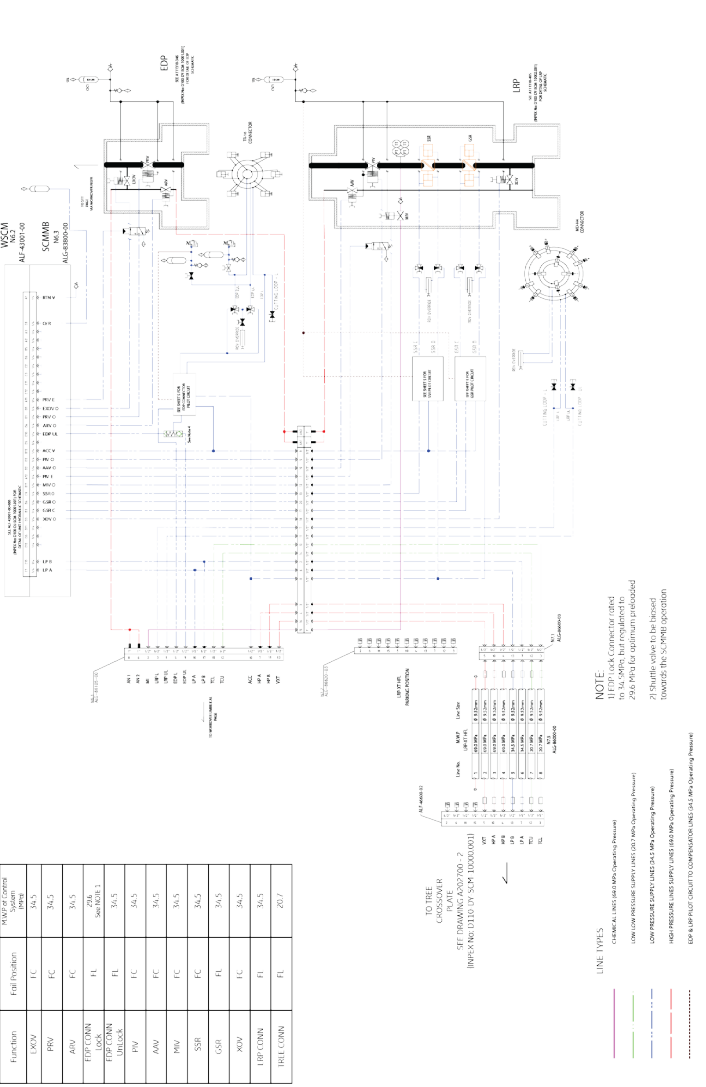

VALVE LIST	
Function	Fail Position
UMV	FC
PRV	FC
AIV	FC
EDP CONN LOCK	FL
EDP CONN UNLOCK	FL
PIV	FC
AOV	FC
MIV	FC
SSR	FC
GSR	FL
XOV	FC
LRP CONN	FI
HELI CONN	FL

7.8 IWOCS/CWOR - Utilities Interface Data

Electrical Input Requirements

Equipment Under Test	Demand	Source	Interface
SCU / MCS - Mains	480 VAC 3 phase 60 Hz Max 63A	Diesel Generator 400 kVA (typical)	Reference ALG-20100-02-072
SCU - Control	120 VAC 1 phase 60 Hz Max 16A		Reference ALG-20100-02-072
HPU	480 VAC 3 phase 60 Hz Max 63A		Reference ALG-20100-02-072
WO Reeler	120 VAC 1 phase 60 Hz		Reference ALG-20100-02-072
TH Reeler	120 VAC 1 phase 60 Hz		Reference ALG-20100-02-072
T&F HPU Transformer	400 VAC 3 Phase 60 Hz		Reference ALG-20100-02-072
T&F HPU	480 VAC 3 Phase 60 Hz	480 VAC 3 Phase 60 Hz	Reference ALG-20100-02-072
Refer to Unit Installation Manuals for Power Ratings			

Compressed air requirements

EFAT Equipment Under Test	Air Supply Demand				
	Pressure	Flow	Interface Connector Type	Air Cleanliness	Jumper Length
WO Reeler	0.7 Mpa (7 Bar)	43 L/Sec @ 0.6 Mpa (6 Bar)	1 1/2" NPT (M)	ISO8573-1: Class 6	30 m
TH Reeler	0.75 Mpa (7.5 Bar)	26 L/Sec @ 0.6 MPa (6 Bar)	1 1/2" NPT (M)	ISO8573-1: Class 6	30 m
WO HPU	0.7 Mpa (7 Bar)	5.9 L/Min	1" crows foot	ISO8573-1: Class 6	30 m
STT Control Panel	0.415 to 0.7 MPa (3 to 7 bar)	Pilot Flow Only	1/4" BSPP at STT Control panel	ISO8573-1: Class 3	30 m

Chemical / potable water injection skid

EFAT Equipment Under Test	Fluid Supplies				
	Pressure	Interface Connection	Cleanliness	Fluid Type	Hose / Pipe Length
WO Reeler (Annulus)	69.0 MPa (690 Bar)	2" ISO Flange Mounted at WO Reeler	SAE AS4059 Class 8	As required	Connection at Reeler
WO Reeler (from CUI)	69.0 MPa (690 Bar)	9/16" MP (F) Interface at CIU	SAE AS4059 Class 8	HW 740 R	As required
STT (from CUI)	69.0 MPa (690 Bar)	9/16" MP (F) Interface at CIU	SAE AS4059 Class 8	HW 740 R	As required

7.9 IWOCS HPU

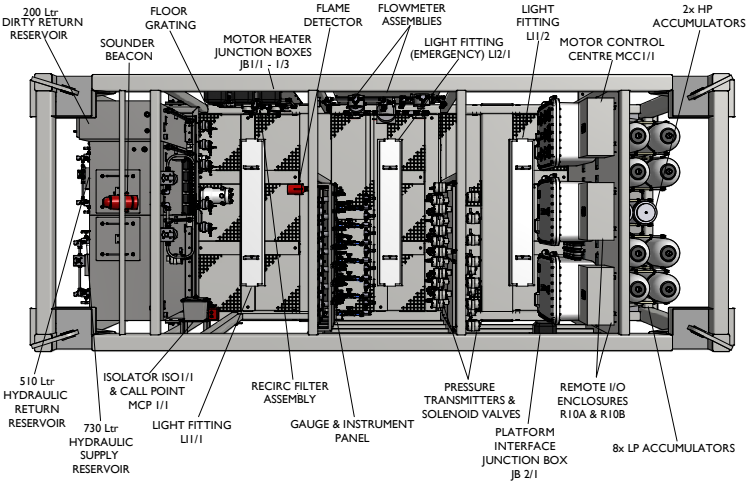

PLAN VIEW
(ROOF REMOVED)

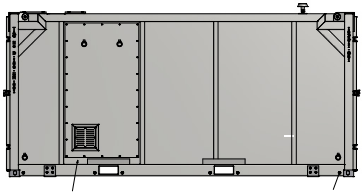

FIRE DAMPER
(BEHIND REMOVABLE
LOUVRE PANEL)

REAR VIEW

1" DRAIN POINT
(6 PLACES)

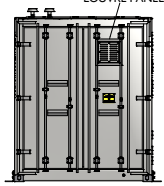

FIRE DAMPER
(BEHIND REMOVABLE
LOUVRE PANEL)

END VIEW

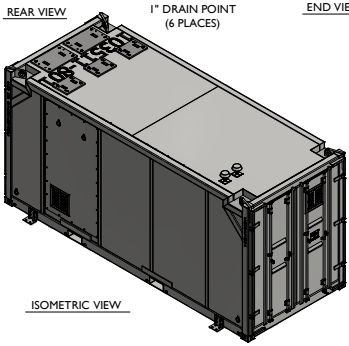

ISOMETRIC VIEW

7.10 IWOCS HPU, Data Table

Dimensions:	
Max Calculated Weight	20000 kg
Estimated Gross Weight	16500 kg
Length	6350 mm
Width	2500 mm
Height	3020 mm
Capacities:	
Supply reservoir	730 litres (Useable Volume)
Return reservoir	510 litres (Useable Volume)
Dirty return reservoir	200 litres (Useable Volume)
Accumulators	
54L LP Bladder x 8 off	Precharge: 235 barg/23.5 Mpa
10L HP Piston x 2 off	Precharge: 550 barg/55.0 Mpa
Hazardous Area Classification	Zone 1, Gas Apparatus group IIB, Temperature Class T3
Operating Environmental Conditions	
Design Temperature	-18 °C to +50 °C
Operating Temperature	-10 °C to +45 °C
Storage temperature	-10 °C to +50 °C
Utilities Requirements	
MCC - Motor Control Centre	480V 60Hz Supply
RIOA & RIOB - Remote I/O A&B	230V 60Hz Supply
Pneumatic Supply	7 barg

7.11 IWOCS SCU

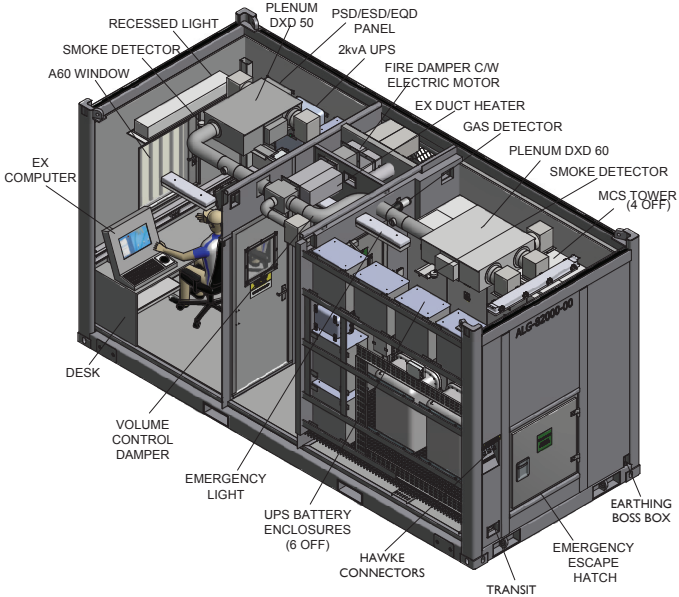

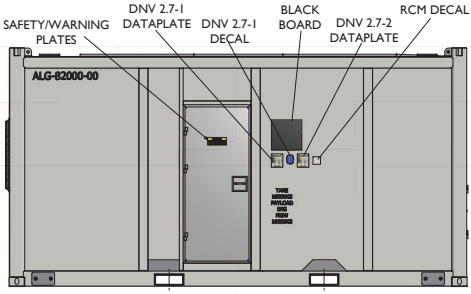

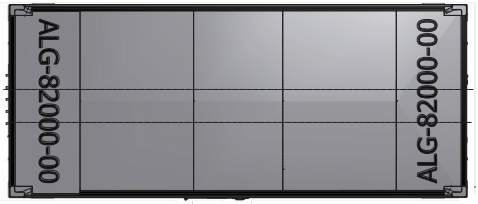

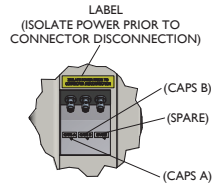

CONNECTORS DETAILS

7.12 IWOCS SCU, Data Table

Data Table	
Supplier	Swire Oilfield Services
Outer Dimensions (LxWxH)	6057 x 2550 x 3161 mm
Module Internal Volume	41 m^2
Tare Weight / Mass gross Weight (kg)	6000 kg/16000 kg
Approved for location in Ex-zone	Hazardous area Zone 1
Year of manufacture / Last modification	2015
Lifting Devices	Sling Set to AS EN 12079 and AS 1666 / DNV 2.7-1
Fire Classification	A-60
Main Door (WxH / Direction / Lock Type)	2100x900 / outward / self-closing mechanism
Manned when hooked up to installation	Permanent
Main Power Supply	3-PH 380VAC 61A Max Fuse 63A; MCB supplied by Rig 3-PH 380VAC 58A Max Fuse 63A; MCB supplied by Rig 3-PH 380VAC 53A Max Fuse 63A; MCB supplied by Rig 3-PH 380VAC 49A Max Fuse 63A; MCB supplied by Rig 3-PH 380VAC 35A Max Fuse 63A; MCB supplied by Rig 3-PH 380VAC 34A Max Fuse 63A; MCB supplied by Rig
Single Phase Essential Power Supply	1-PH 120-240 VAC (Max Fuse 16A)
Frequency	50/60 Hz
Distribution System	TN-S
Shortcut Capasity Main Power	Max 30 KA, Min 1 KA
Shortcut Capasity 220-240VAC	Max 10 KA, Min 0,6 KA
Output Main Transformer	3-PH+N 400/230 VAC - 42 A (Max) 3-PH 440 VAC - 16 A (Max)
Zone 1 UPS	2 kVA 230 V 24 Hrs (Fire and Gas System)
IWOCS UPS	2x5 kVa 230 V 1Hr (MCS System)
Air Condition Unit	1 x DXD50 Cooling Duty 3.5 kW (Operator Room) 1 x DXD60 Cooling Duty 5.5 kW (Local Equipment Room)
HMI Display	ET-316 Display 10”
Pressure Switch	1 x Pressure Switch (Operator Room) 1 x Pressure Switch (Local Equipment Room)
Flow Switch	1 x Flow Switch (Main Inlet)
Sockets	3 x 13 A 230 V Double Australian Sockets (Operator Room) 1 x 1 3A 230 V Double Australian Sockets (Local Equipment Room)
Rig Signals (Potential Free Contacts N/O and N/C)	Fire - Signal sent to Rig Gas - Signal sent to Rig Common Fault - Signal sent to Rig Loss of Pressure (LOP) - Signal sent to Rig Manual Alarm - Signal sent to Rig
Emergency Shut Down (ESD)	1 x ESD

Data Table	
Fire Detection	2 x Smoke Detectors (Local Equipment Room) 1 x Smoke Detector (Technical Room) 1 x Smoke Detector (OperatorRoom) 2 x Manual Call Points (Operator Room/LER)
Gas Detection	1 x Gas Detector (Inside Fan housing) 1 x Gas Detector (Operator Room) 1 x Gas Detector (LER) 1 x Gas Detector (Air lock)
PA System	1 x PA-A, HS-8 EExmN (T), DNH 1 x PA-B, HS-8 EExmN (T), DNH
Telephone	1 x EX-Telephone, Auteldac 4, GAI-Tronics
Fire Extinguisher	2 x 5kg (Capacity)
Light	Average 500 lux
Noise	50 dB(A) without AC System running 60 dB(A) with AC System running
Air Flow / Pressure / Air Changes / Fan Size	>500 m^3/h / >50 Pa / >6/h / 696W
Purge Time	45 minutes
Ambient Temperature	-18 °C to +40 °C

7.13 WO Reeler

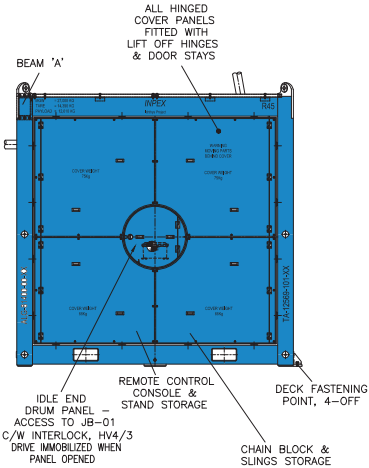

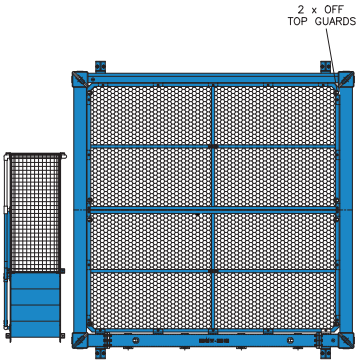

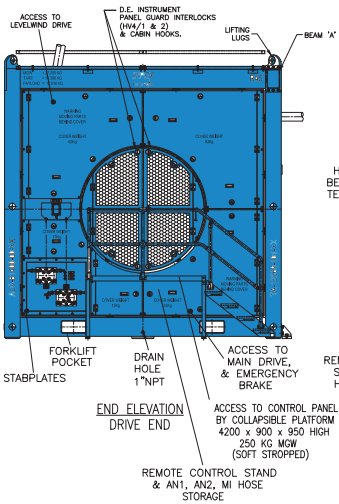

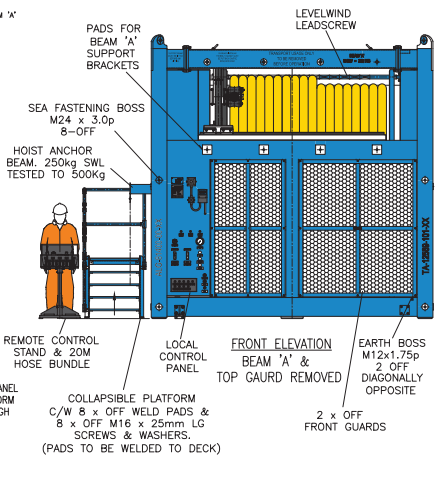

7.14 WO Reeler, Data Table

Umbilical Reel	
SWL (Reeler)	2500 kg
Motor Brake Static Load	3125 kg at bottom layer of Umbilical
Motor Brake Dynamic Load	2500 kg at bottom layer of Umbilical
Emergency Brake Static Load	3125 kg at bottom layer of Umbilical
Emergency Brake Dynamic Load	2500 kg at bottom layer of Umbilical
Hoist / Lower Speed	2.17rpm (20 m/min on innermost layer)
Umbilical Diameter	138 +/- 2 mm
Umbilical Length	450 m
Umbilical Weight in air (Full)	18.0 kg/m
Umbilical Weight in seawater (Full)	5.50 kg/m
Umbilical min. Bend Radius	1400 mm (Dynamic)
Drum Capacity	545.2 m
Drum Diameter	2800 mm
Drum Length (Between Flanges)	2580 mm
Power Demand	11.03 kW at 6 bar
Power Unit	RM510 Globe Radial Piston Geared Air Motor
Required motor speed	1120 rpm
Motor Noise	<82 decibel at 1m
Overall transmission ration	516.6:1
Operating Temperature	-15 °C to +60 °C (for electrical Components) -15 °C to +50 °C (for electrical Components)
Area Classification	Zone 1, Gas Group IIB, Temperature Class T3
Max Gross Weight	27.00 Tonnes
Max Payload	12.61 Tonnes
Tare Weight	14.39 Tonnes
Reel Height	4509 mm
Reel HxLxD	4509 x 4492 x 4412 mm
Sheave	
SWL (Line Pull)	3000 kg
SWL (Lifting Lug)	55000 kg
Max Gross Weight	1650 kg
HxLxD	2576 x 3200 x 599 mm
Utility Requirements	
Compressed air	Approx. 43 litres pr second at 6bar (90psi)
Electrical Supply	110-240 v AC

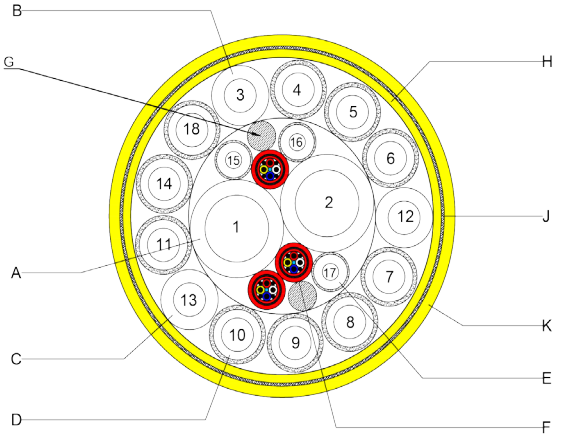

Nominal Mechanical Characteristics:-

Finished Diameter:	138mm±2mm
Weight in air:	18,000Kg/km (See note 1)
Weight in sea-water:	5,500Kg/km (See note 1, 2 & 3)
Minimum bend radius (static):	950mm
Minimum bend radius (dynamic):	1,400mm
Minimum break load:	100KN
Maximum working tensile load:	25KN

Note 1: Hoses fluid filled (assume SG = 1.06)
Note 2: Assumed sea-water density - 1,022Kg/m³
Note 3: Assume interstitial gaps filled with sea water

Assembly Detail:-

A - 2 off 2440N-16V91, 1" NB 690 bar WP, wire reinforced annulus hoses with Nylon 11 liner.
(2,250 bar min. burst pressure, 40 bar operational collapse resistance)

B - 1 off 2440N-08V91, ½" 690 bar WP, wire reinforced chemical hose with Nylon 11 liner.
(3,240 bar min. burst pressure, 120 bar operational collapse resistance)

C - 2 off 2A08HP, ½" 690 bar WP, thermoplastic hydraulic hoses with Nylon 11 liner. (2,760 bar min. burst pressure)

D - 10 off 1A08HP, ½" 345 bar WP thermoplastic hydraulic hoses with Nylon 11 liner. (1,380 bar min. burst pressure)

E - 3 off 2A04RDOS, ¼" 690 bar WP, thermoplastic hydraulic hoses with Nylon 11 liner. (2,760 bar min. burst pressure)

F - 3 off OC0164 electrical cables, each comprising:
- 4 x 2.5mm² polyethylene insulated plain copper conductors (Colours: Red/White/Blue/Yellow from 12 o'clock position)
- Assembly voids filled with silicon rubber compound
- Fibre filler elements may be added or omitted at the discretion of Cortland Fibron BX Ltd
- Polyethylene inner sheath (0.9mm nominal thickness)
- Galvanised steel wire reinforcement braid
- Polyethylene outer sheath (1.1mm nominal thickness) - Colour: Red

G - Fibre filler elements may be added or ommitted at the discretion of Cortland Fibron BX Ltd

H - Polyurethane inner sheath (3.2mm nominal thickness) - Colour: Yellow

J - Braided Vectran fibre strength member

K - Solid filled Polyurethane outer sheath - Colour: Yellow (4.4mm nominal thickness)

7.16 WO Umbilical, Data Table

Operating Parameters				
Line Number	Tag	Hose Working Pressure(psi)	System Working Pressure(psi)	Stabplate Coupler
1	AN1	10000	5000	3/4" NB (F)
2	AN2	10000	5000	3/4" NB (F)
3	MI	10000	5000	3/8" NB (F)
4	LRP L	5000	5000	3/8" NB (F)
5	LRP UL	5000	5000	3/8" NB (F)
6	EDP L	5000	3900	3/8" NB (F)
7	ACC	5000	5900	3/8" NB (F)
8	LPA	5000	5000	3/8" NB (F)
9	LPB	5000	5000	3/8" NB (F)
10	TCL	5000	3000	3/8" NB (F)
11	TCU	5000	3000	3/8" NB (F)
12	SPARE 1	10000	N/A	3/8" NB (F)
13	SPARE 2	10000	N/A	3/8" NB (F)
14	EDP UL	5000	5000	3/8" NB (F)
15	HPA	10000	10000	1/4" NB (F)
16	HPB	10000	10000	1/4" NB (F)
17	VXT	10000	10000	1/4" NB (F)
18	SPARE 3	5000	N/A	3/8" NB (F)

7.17 TH reeler

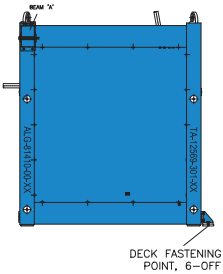

END ELEVATION – DRUM 'B'
INSTRUMENT PANEL END

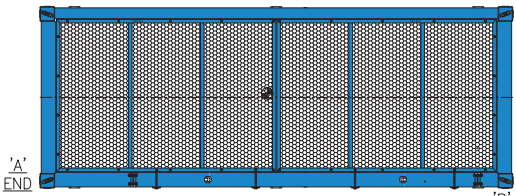

PLAN VIEW

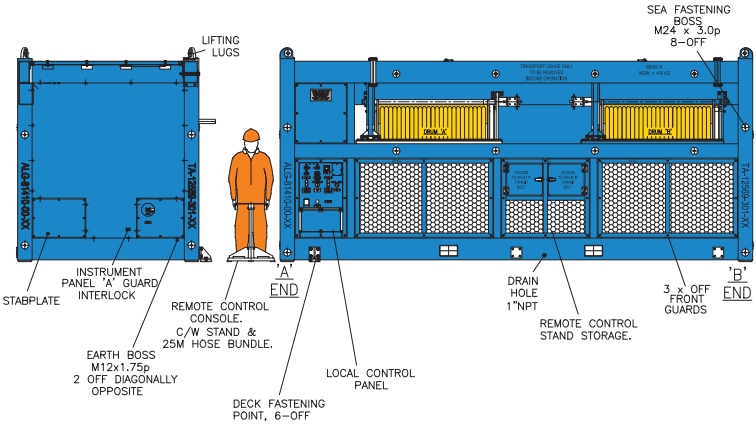

END ELEVATION – DRUM 'A'
INSTRUMENT PANEL END

FRONT ELEVATION

7.18 TH reeler, Data Table

THRT Reel	
Tare Weight of Reeler Assy	14.32 Tonnes (approx.)
Max. Payload of Umbilicals “A” and “B”	3.68 Tonnes (Including Contingency)
Max. Gross Weight (Flooded)	18.0 Tonnes (Including Contingency)
SWL	500 kg each drum
Operating Temperature	-15 °C to +60 °C (+50 °C for Electrical Components)
Reel H x L x D	2950 x 6532 x 2500 mm
Utility Requirement - Air Supply	26 Litres/Second, 6 bar
Air Quality, Reeler Operation	ISO 8573 Class 3
Air Quality, Rig	ISO 8573, Min. Class 6
Motor Brake Static Load	625 kg
Hoist/Lowering Speed	5.06 RPM (20m/min on innermost layer)
Area Classification	Zone 1, Gas Group IIB, Temperature Class T3
Umbilicals	
“A”, Diameter	59 +/-2 mm
“B”, Diameter	58 +/-2 mm
Length	450 m
Min. Bend Radius (Dynamic)	565 mm
Min. Bend Radius (Static)	450 mm
SWL	12.5 kN

7.19 THRT Umbilical A

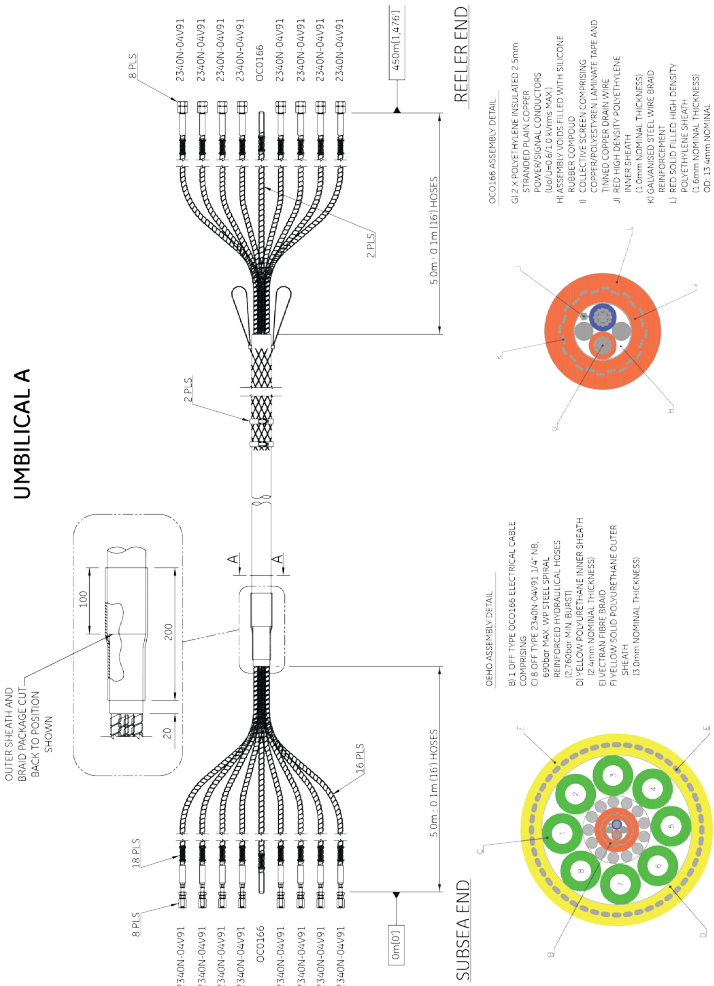

7.20 THRT Umbilical B

UMBILICAL B

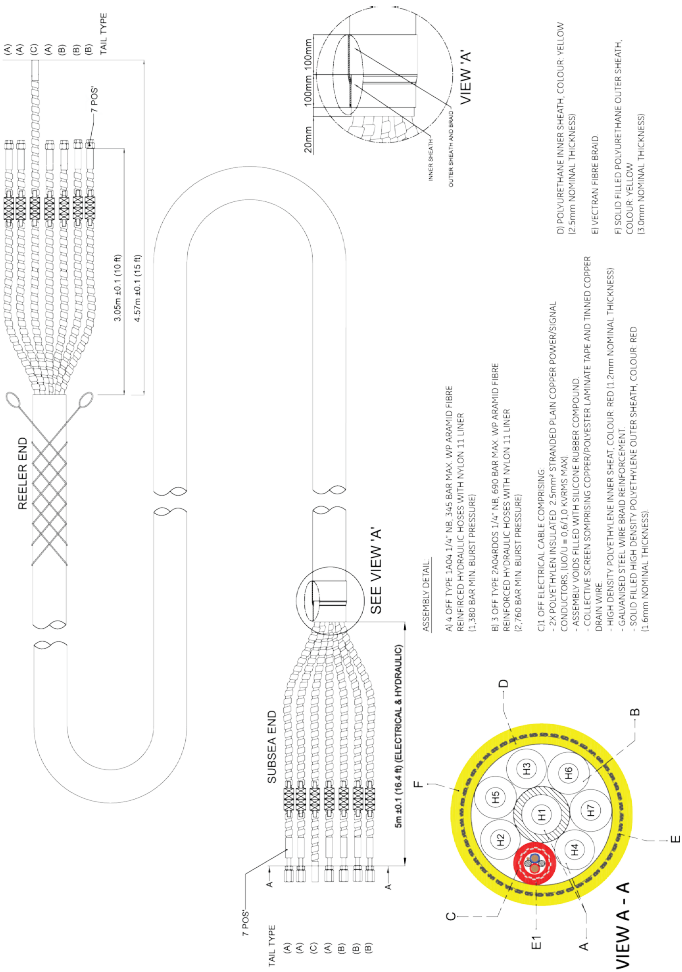

7.21 THRT Umbilicals, Data Table

THRT Umbilical A - Operating Parameters					
Line Number	Tag	Hose Working Pressure(psi)	System Working Pressure(psi)	Interface Topside	Interface Subsea
H1	H1 690BAR 8 TH LAND CON	10000	10000	No6 JIC	3/8" MP
H2	H2 690BAR 9 THL CON	10000	10000	No6 JIC	3/8" MP
H3	H3 345BAR 5 SFT LAND	10000	5000	No6 JIC	3/8" MP
H4	H4 345BAR 7 VENT	10000	5000	No6 JIC	3/8" MP
H5	H5 690BAR 14 SIIT	10000	10000	No6 JIC	3/8" MP
H6	H6 690BAR 12 SSSV2	10000	10000	No6 JIC	3/8" MP
H7	H7 345BAR 6 PLI	10000	5000	No6 JIC	3/8" MP
H8	H8 690BAR SPARE 1	10000	10000	No6 JIC	3/8" MP

THRT Umbilical B - Operating Parameters					
Line Number	Tag	Hose Working Pressure(psi)	System Working Pressure(psi)	Interface Topside	Interface Subsea
H1	H1 345BAR 1 TH L	5000	5000	No6 JIC	3/8" MP
H2	H2 345BAR 2 TH UL	5000	5000	No6 JIC	3/8" MP
H3	H3 345BAR 3 THRT L	5000	5000	No6 JIC	3/8" MP
H4	H4 345BAR 4 THRT UL	5000	5000	No6 JIC	3/8" MP
H5	H5 690BAR 13 TH TEST	10000	10000	No6 JIC	3/8" MP
H6	H6 690BAR 11 SSSV1	10000	10000	No6 JIC	3/8" MP
H7	H7 690BAR SPARE 2	10000	5000	No6 JIC	3/8" MP

7.22 Surface Test Tree (STT)

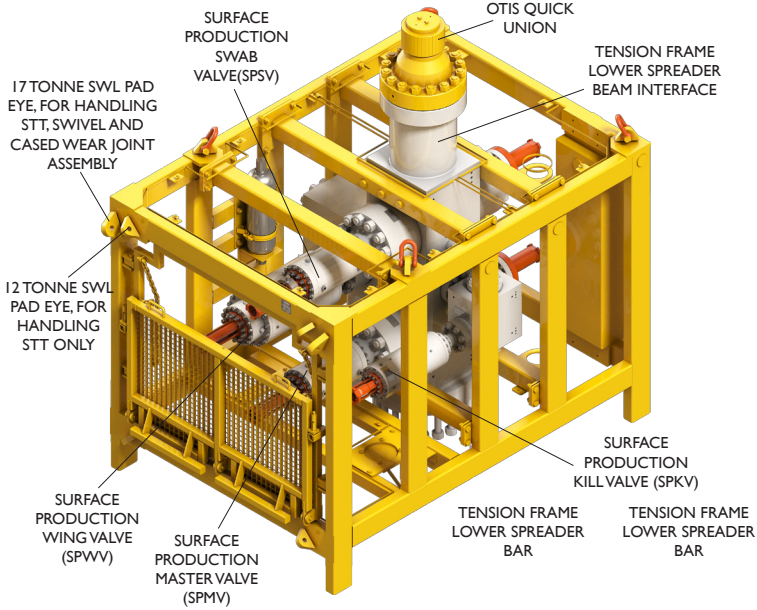

7.23 Circulation Head

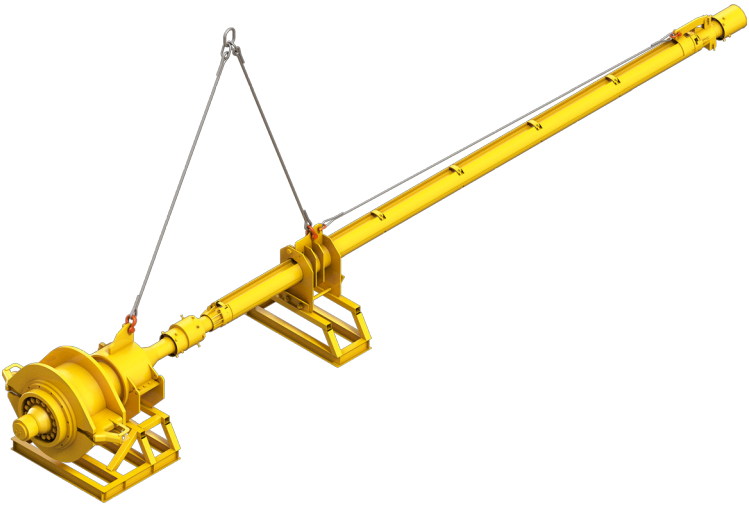

7.24 Tension Frame

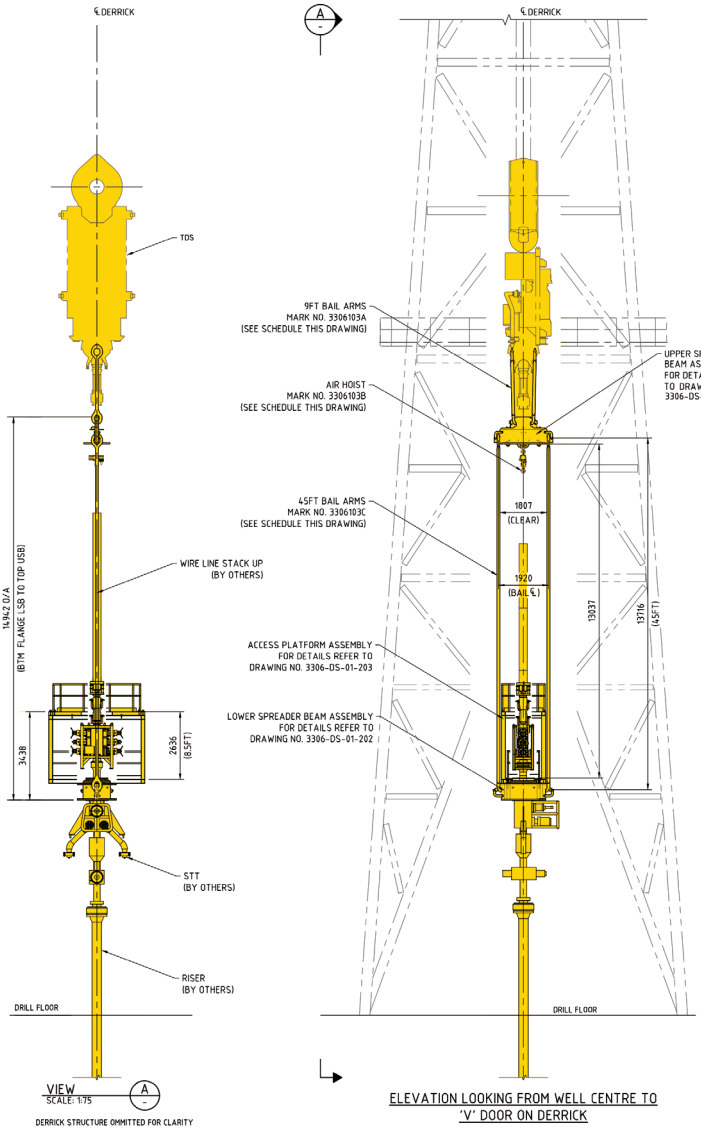

7.25 STT Data table

STT	
Parameter / Equipment	Description
STT Umbilical Connection	Stabplate located on underside of STT Chemical Injection quick connect on underside of STT
Wireline/Coiled Tubing BOP Connection	11-1/2" 4-ACME OTIS Quick Union
Swiwel Connection	11" 15000 psi Flange c/w 7-3/8" SSD Seal
Rig Hose Connections	Production: 4" Weco 1502 Hammer Union Kill: 3" Weco 1502 Hammer Union
Production Outlet Bore at Rig Hose Connection	2.75"
Kill Inlet Bore at Rig Hose Connection	2.20"
Tension Frame Connection	20" Diameter neck integral to the Master Valve Block
Height	3748.89 mm (147.6")
Depth (platform up)	3534.52 mm (139.2")
Depth (Platform down)	4591.58 mm (180.8")
Width	2393.60 mm (94.2")
Mass (est.)	21.791 kg (48041lbs)
Vertical Bore Drift Size	ISO 13628-7, Class 5a Drift (6.340° + 0.27° /-0° Dia. X 42" Long)
Vertical Bore Diameter	7-3/8" (which is restricted by a 6.39" min. Dia. at OTIS Connection)
Production Wing Bore	6-3/8"
Kill Wing Bore	3-1/16"
Pressure Rating	10000 psi (690 bar) Working
Service	H2S, NACE MR0175/ISO15156 Temp. Class, -18 °C to 121 °C HH trim on all wetted areas (Production and Kill)

STT Valves Operational Table	
SPMV	7-3/8", 10,000 psi [690 bar] MWP VG300 w/FAI Hydraulic Actuator c/w linear override & visual position indicator
SPSV	7-3/8", 10,000 psi [690 bar] MWP VG300 w/FAI Hydraulic Actuator c/w linear override & visual position indicator
SPWV	6-3/8", 10,000 psi [690 bar] MWP VG300 w/FSC OPCH 82/36S Hydraulic Actuator c/w linear override & visual position indicator.
SPKV	3-1/16", 10,000 psi [690 bar] MWP VG300 w/FSC OPCH 44/24SP Hydraulic Actuator c/w linear override & visual position indicator
SMIV	½", 10,000 psi [690 bar] MWP w/FSC Hydraulic Actuator (3rdParty Supply)

7.26 LRP EDP, General Arrangement

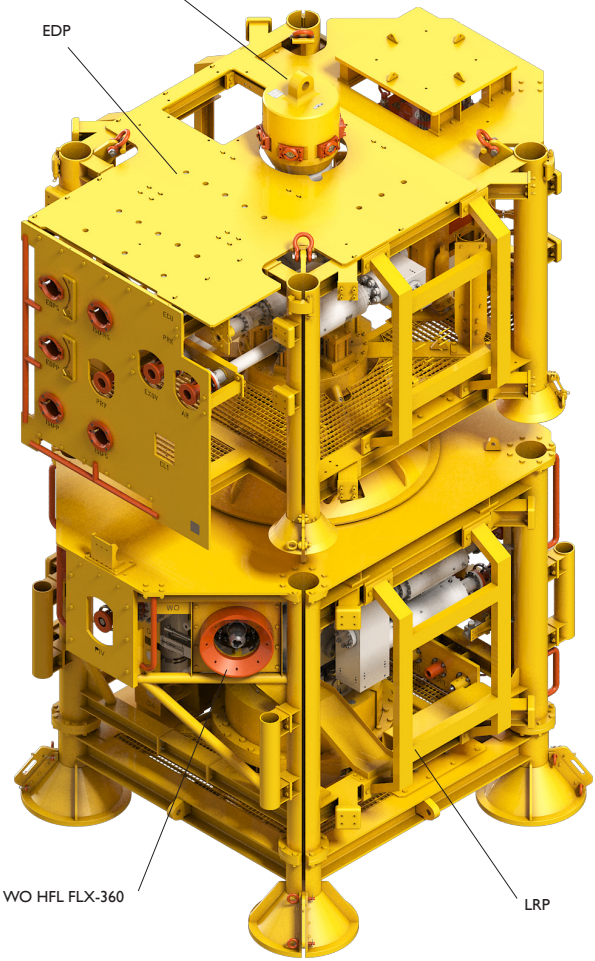

7.27 LRP, EDP, Cross Section

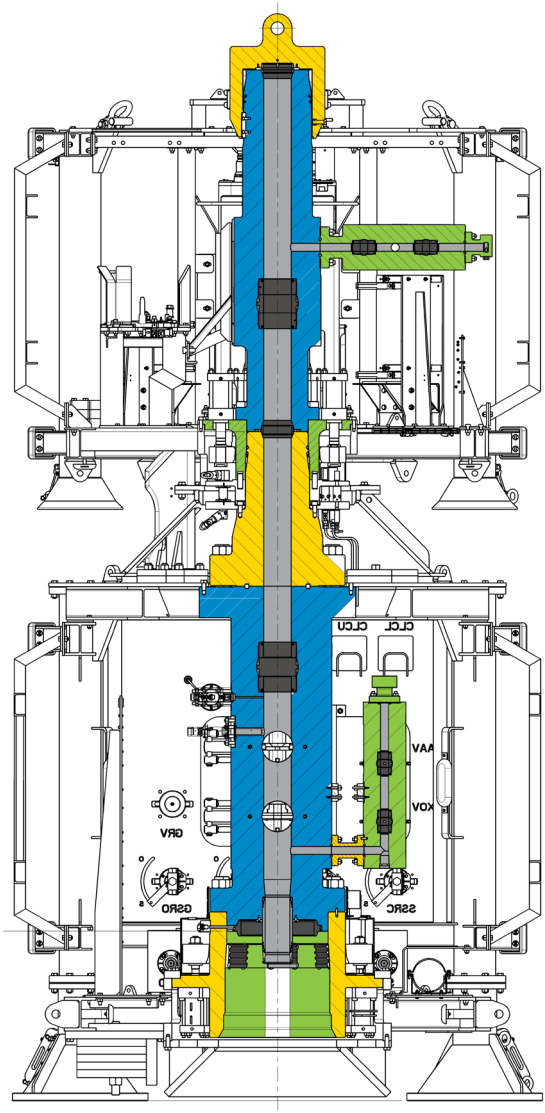

7.28 LRP, EDP, ROV Panels

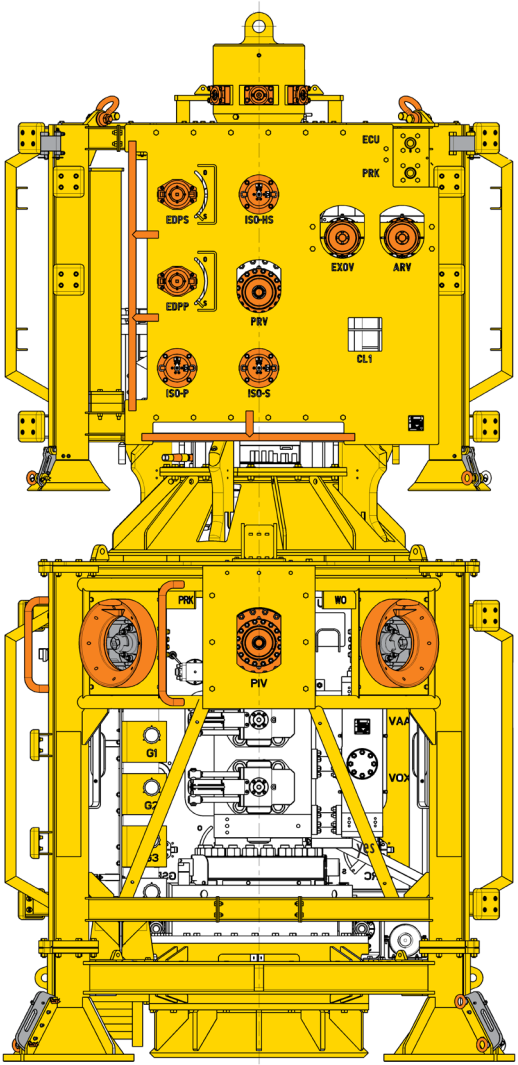

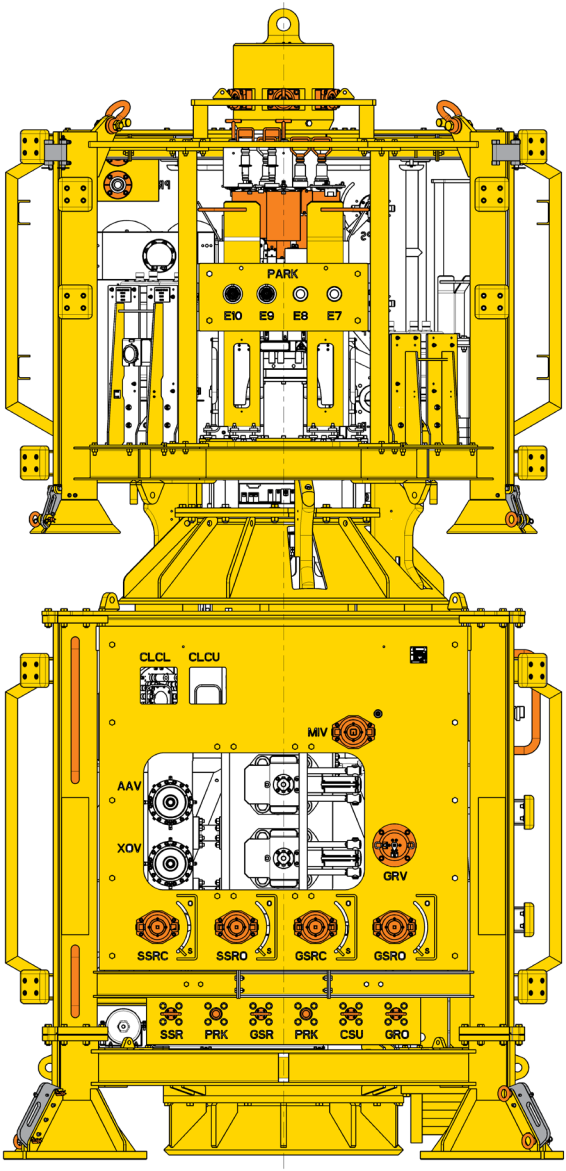
PARK
E10
E9
E8
E7
CLCL
CLCU
MIV
AAV
XOV
GRV
SSRC
SSRO
GSRC
GSRO
SSR
PRK
GSR
PRK
CSU
GRO

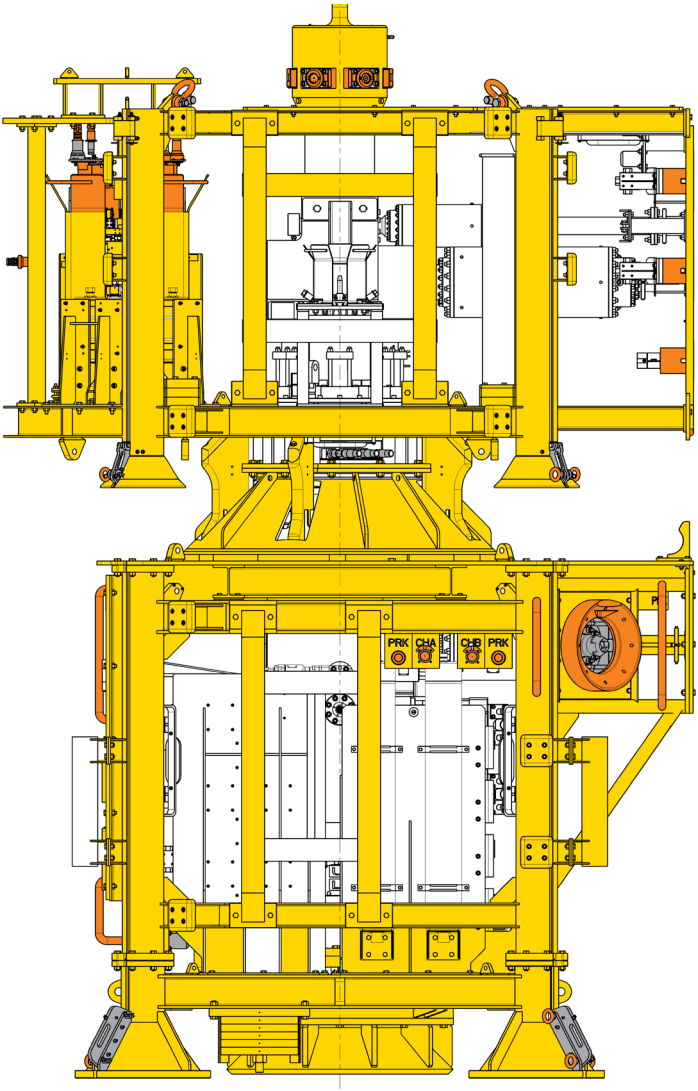
PRK
CHA
CHB
PRK

7.29 LRP, EDP Data Table

LRP:						
Ident	Description	Bore Size/Type	ROV Interface	Dir. to Close	Turns/Travel	Op. Torque Nm(ft-lbs)
PIV	Production Isolation Valve	7 1/16" Hydr. act.gate	Linear override, ISO 13628-8, Type B	Retract (away from MVB)	219mm (8.62")	N/A
XOV	Cross Over Valve	2 1/16" Hydr. act.gate	Linear override, ISO 13628-8, Type B	Retract (away from AVB)	73MM (2.88")	N/A
AAV	Annulus Access Valve	2 1/16" Hydr. act.gate	Linear override, ISO 13628-8, Type B	Retract (away from AWB)	73mm (2.88")	N/A
SSRC	Shear Seal Ram Close Valve	½" 3 Way, 2 Position Ball Valve	ISO 13628-8 TT Class 2	Clockwise	1/4	20 to 68 (15 to 50)
SSRO	Shear Seal Ram Open Valve	½" 3 Way, 2 Position Ball Valve	ISO 13628-8 TT Class 2	Clockwise	1/4	20 to 68 (15 to 50)
SSR	Shear Seal Ram	Dual Bore Hot Stab	ISO 13628-8, Type B	N/A	N/A	N/A
GSRC	Grip Seal Ram Close Valve	½" 3 Way, 2 Position Ball Valve	ISO 13628-8 TT Class 2	Clockwise	1/4	20 to 68 (15 to 50)
GSRO	Grip Seal Ram Open Valve	½" 3 Way, 2 Position Ball Valve	ISO 13628-8 TT Class 2	Clockwise	1/4	20 to 68 (15 to 50)
GSR	Grip Seal Ram	Dual Bore Hot Stab	ISO 13628-8, Type B	N/A	N/A	N/A
GRV	Gasket Retainer Valve	½" ROV Operated Needle Valve	ISO 13628-8 TT Class 2	Counterclock-wise	3/4	136 (100)
GRO	Gasket Retainer Override	Dual Bore Hot Stab	ISO 13628-8, Type B	N/A	N/A	N/A
MIV	Methanol Injection Valve	½" Hydr.act.gate incl. Check Valve	ISO 13628-8 TT Class 2	Clockwise	4.5	40 to 150 (30 to 110)
CSU	Connector Second-ary Unlock	Dual Bore Hot Stab	ISO 13628-8, Type B	N/A	N/A	N/A
CLCL	Cutting Loop Connector Lock	3/8" x 0.065" Tubing	Access Window on ROV Panel	N/A	N/A	N/A
CLCU	Cutting Loops Connector Unlock	3/8" x 0.065" Tubing	Access Window on ROV Panel	N/A	N/A	N/A
HFL	HFL incl Park	FLX360 Fixed MQC Plate/Parking Plate	FLX360 core tool c/w FLOT	N/A	N/A	N/A
I7	HFL incl Workover	FLX360 Fixed MQC Plate/Workover Plate	FLX360 core tool c/w FLOT	N/A	N/A	N/A
I	EFL incl Park x 2	Tronic Connectors	Tronic Paddle Handle	N/A	N/A	N/A

EDP

Ident	Description	Bore Size/Type	ROV Interface	Dir. to Close	Turns/Travel	Op. Torque Nm(ft-lbs)
PRV	Production Retainer Valve	7 1/16" Hydr. act.gate	Linear Override, ISO 13628-8, Type B	Retract (away from MVB)	219 MM (8.62")	N/A
ARV	Annulus Retainer Valve	2 1/16" Hydr. act.gate	Linear Override, ISO 13628-8, Type B	Retract (away from AWB)	73MM (2.88")	N/A
EXOV	EDP X-Over Valve (EXOV)	2 1/16" Hydr. act.gate	Linear Override, ISO 13628-8, Type B	Retract (away from AWB)	73MM (2.88")	N/A
EDPP	EDP Primary Unlock (EDPP)	½" 3 Way, 2 Position Ball Valve	ISO 13628 TT Class 2	Clockwise	1/4	20 (15)

Ident	Description	Bore Size/Type	ROV Interface	Dir. to Close	Turns/ Travel	Op. Torque
EDPS	EDP Secondary Unlock (EDPS)	½" 3 Way, 2 Position Ball Valve	ISO 13628 TT Class 2	Clockwise	1/4	20 (15)
ISO-P	EDP Primary Unlock Sea Chest Isolation	½" Needle Valve	ISO 13628 TT Class 2	Clockwise	3/4	136 (100)
ISO-S	EDP Secondary Unlock Sea Chest Isolation	½" Needle Valve	ISO 13628 TT Class 2	Same figures as ISO-P		
ISO-HS	Hot Stab Isolation Valve	½" Needle Valve	ISO 13628 TT Class 2	Same figures as ISO-P		
CLI	Cutting Loop	1/2" x 0.065" Tubing	Access Window on ROV Panel	N/A for this row		
ECU	EDP Connector Unlock	Dual Bore Hot Stab	ISO 13628-8, Type B	N/A for this row		
I1	EDP Gauge G1	Gauge for observing Nitrogen pre-charge level of EDP Connector Accumulators	Gauge Ø100 mm Case	N/A for this row		
I2	EDP Gauge G2	Gauge for observing Pressure level of EDP Connector Accumulators	Gauge Ø100 mm Case	N/A for this row		
CWOR Intervention on XT						
1	Remove XT Cap	Remove XT Cap from Tree Mandrel, and inspect the surface of the Mandrel, clean using Water Jetting if applicable.	ISO 13628-8 Flexible D Handle			
2	Guiding	Guide the lowering of the EDP/LRP-stackup onto the Tree Mandrel, ensuring that the Post numbering is matched. ROV to open the Hatch above the XT SCM before the LRP is fully landed on the Tree.	EDP/LRP ROV Grab Bars			
3	Lock Connector	Lock the MD-H4 Connector on the LRP onto the Tree using the IWOCS, and verify that it is fully locked.	N/A			

Ident	Description	Bore Size/Type	ROV Interface	Dir. to Close	Turns/ Travel	Op. Torque
4	Connect HFL	ROV to pick up the HFL from the parking position on the LRP and connect it to the dedicated Connector on the XT.	FLX360 core tool c/w FLOT			
5	Connect EFL's	Then pick up the EFL's from the parking position on the LRP and connect it to the dedicated Connector on the XT SCM.	Tronic Paddle Handle			

7.30 Emergency Disconnect Package, EDP

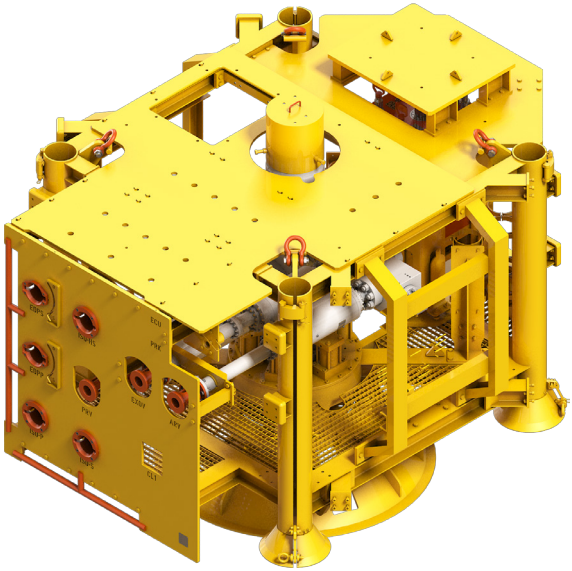

Parameter	Description
Nominal Bore Size	7-1/16" (179 mm) Master valve Blocj 2-1/16" (52 mm) Annulus Wing Block
Pressure Rating	10000 psi (690 bar) Working
Height	130.94" (3325.9 mm)
Depth	178.58" (4536.0 mm)
Width	135.74" (3447.7 mm)
Mass (estimated)	50706 lbs (23000 kg)
Upper Connection	16" MR-6 Hub to interface with Stress Joint Quick Fit Connector
Lower Connection	16" TR-CC Connector, to interface with LRP Mandrel
Temperature Rating	Temperature Range:: -18 to 155 °C Inboard of EXOV -18 to 121 °C Outboard of EXOV
Service	H_2S, M2S, NACE MR0175/ISO15156
Design Life	40 years
Service Life	5 years
Hydraulically Actuated Valves	PRV, ARV, EXOV
ROV Operated Valves	EDPP, EDPS, ISO-P, ISO-S, ISO-HS

7.31 Lower Riser Package, LRP

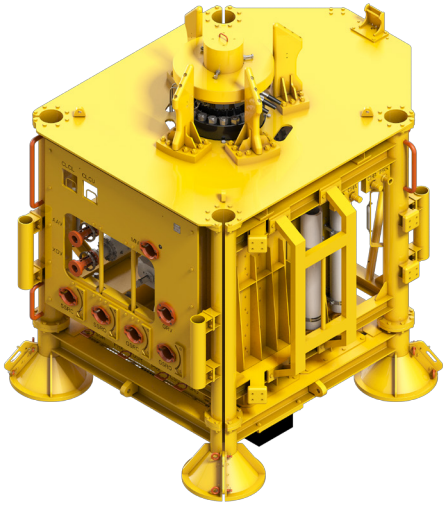

Parameter	Description
Minimum Production Bore Diameter (on LRP MVB)	6.365”
Nominal Production Valve Bore	7.063”
Nominal Annulus Bore	2.063”
Bore and Annulus Working Pressure	10000 psi (69.0 MPa)
Height	4431.7 mm (174.47”)
Depth	4091.5 mm (161.08”) x 3475.2 (136.82”)
Weight in air (estimated)	33375 kg (73579lbs)
Vertical Bore Drift Size	ISO13628-7, Class 5a Drift (6.340” + 0.27” / -0 Dia. X 42” Long) for MVB
XT HFL and EFL Connection	HFL Workover (“live”) and Park Stabplates are located at the front of the LRP.
EDP Connection (top)	TR-CC 16 Mandrel, 7-3/8” SSD Seal
Tree Connection (bottom)	Connector Wellhead MD-H4, VGX-2 Gasket
Temperature rating	Temperature Range:: -18 °C to 155 °C Inboard of AAV -18 °C to 121 °C Outboard of AAV 0 °C to 155 °C SSR and GSR

7.32 Hydraulic Jumpers, Deck and Subsea

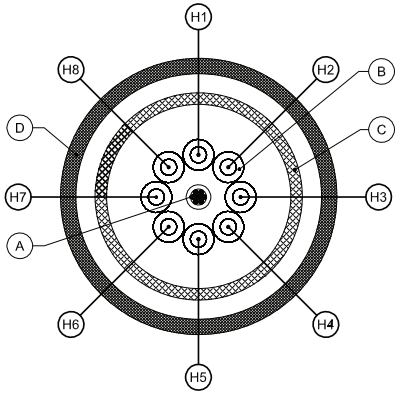

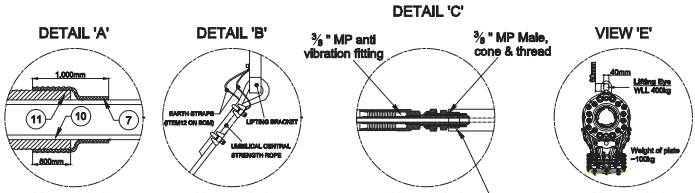

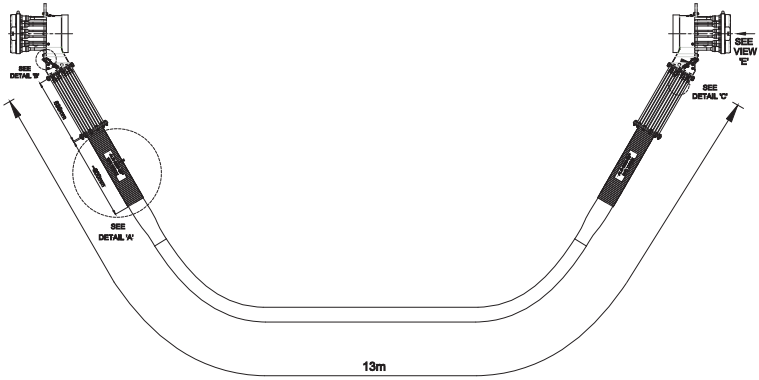

7.33 Hydraulic Jumpers, Data Table

Hose Function table								
Line no.:	Cpupler position	Func-tion.	Hose Type	Hose Design pressure	Hose Burst Pressure	Hose Size	Max System Working Pressure	Sytem Test Pressure
H1	7	LP A	2A06HP	690 bar	2.760 bar	3/8”	345 bar	518 bar
H2	13	LP B	2A06HP	690 bar	2.760 bar	3/8”	345 bar	518 bar
H3	10	HP A	2A06HP	690 bar	2.760 bar	3/8”	690 bar	1035 bar
H4	4	HP B	2A06HP	690 bar	2.760 bar	3/8”	690 bar	1035 bar
H5	12	TCU	2A06HP	690 bar	2.760 bar	3/8”	207 bar	518 bar
H6	3	TCL	2A06HP	690 bar	2.760 bar	3/8”	207 bar	518 bar
H7	5	VXT	2A06HP	690 bar	2.760 bar	3/8”	690 bar	1035 bar
H8	Spare	Hydraulic	2A06HP	690 bar	2.760 bar	3/8”	690 bar	1035 bar

Handling Data	
Weight in air of HFL	330 kg (including Stab Plates)
Weight of Stab Plate 44919 (ALG-86610-03)	118 kg
Weight of Stab Plate 44920 (ALG-86610-02)	118 kg
Minimum Static Bend Radius	450 mm
Minimum Dynamic Bend Radius	670 mm
Minimum Bend Radius (Hose 2A06HP)	152 mm

Technical Data	
Hydraulic Fluid	Oseanic HW740R Note! HFL’s are delivered with all lines filled and capped with Oseanic HW740R
System Working Pressure	LLP System: 3000 psi (207 bar) LP System: 5000 psi (345 bar) HP System: 10000 psi (690 bar)
Environmental	Design Life: 5 years Storage Life: 40 years Design Temperature: Operating: -5 °C to +50 °C Storage: -18 °C to +50 °C

7.34 Intervention System - Stacked Up

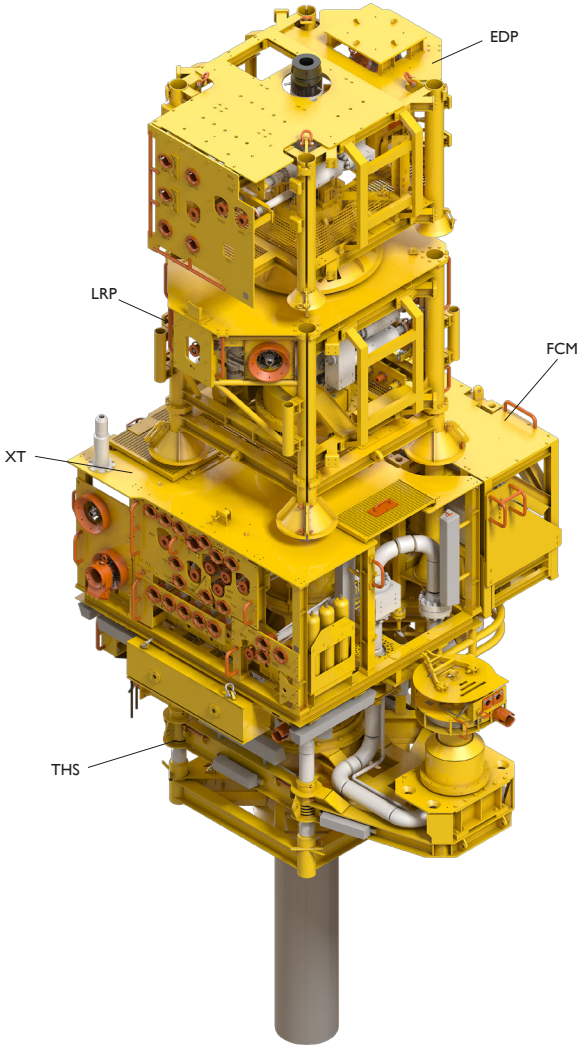

7.35 Intervention System Stacked Up - Cross Section

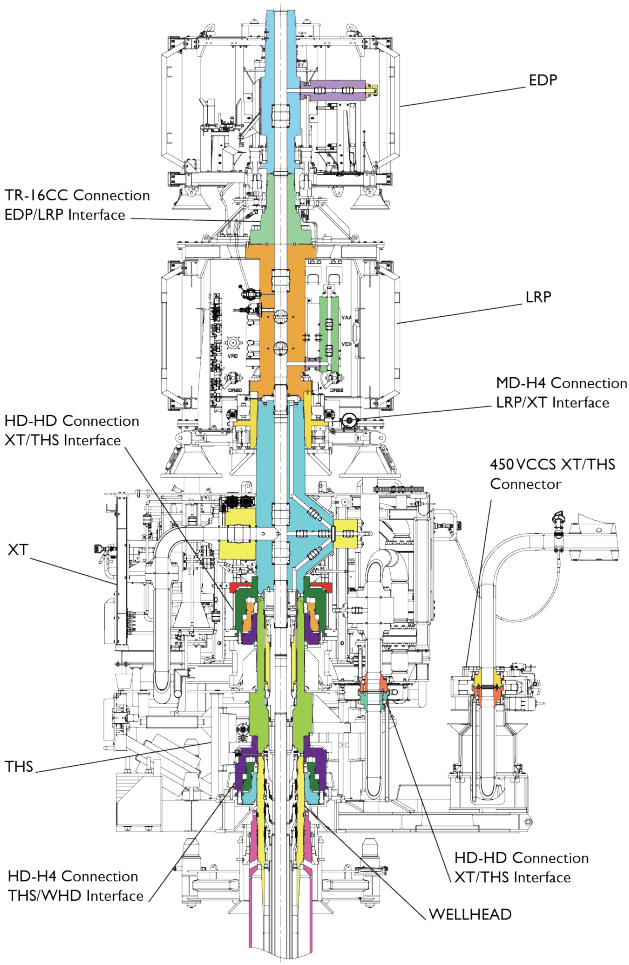

8 Manifold System

8.1 Scope of Supply

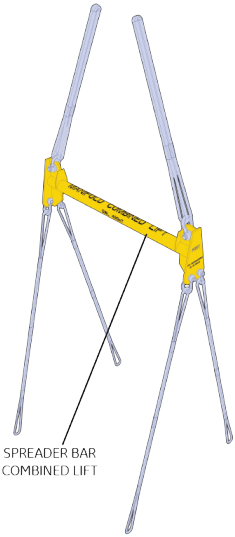

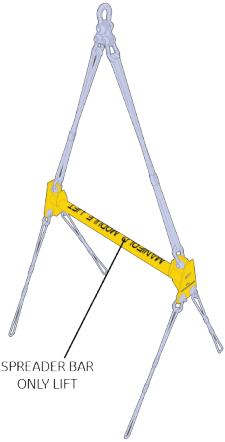

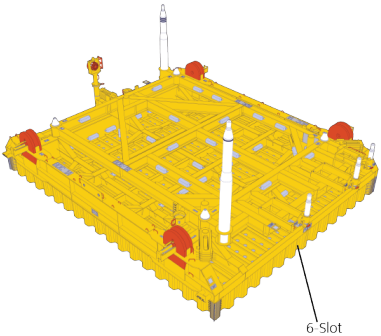

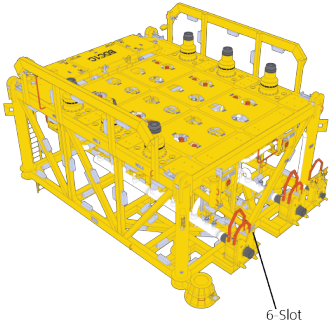

8.2 Manifold, General Arrangement

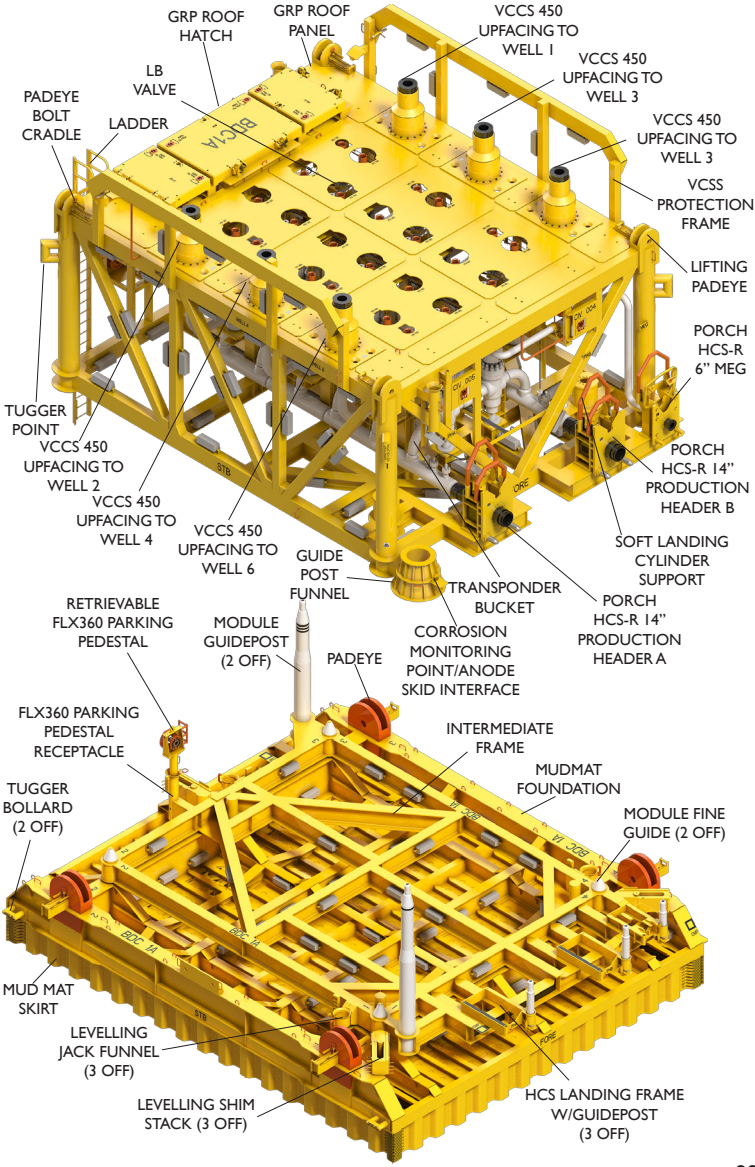

8.3 Manifold Large Bore Piping

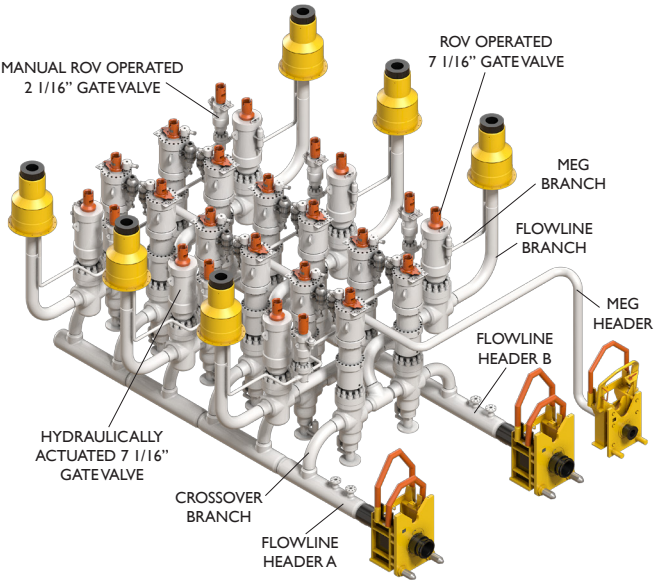

8.4 Manifold Small Bore Piping

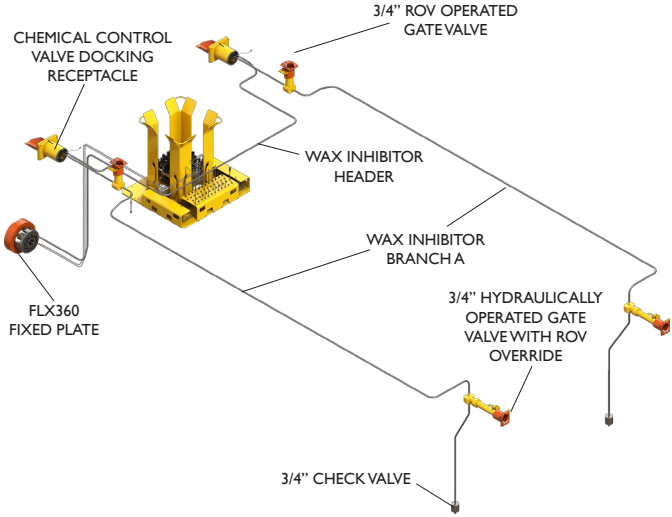

8.5 Manifold, P & ID

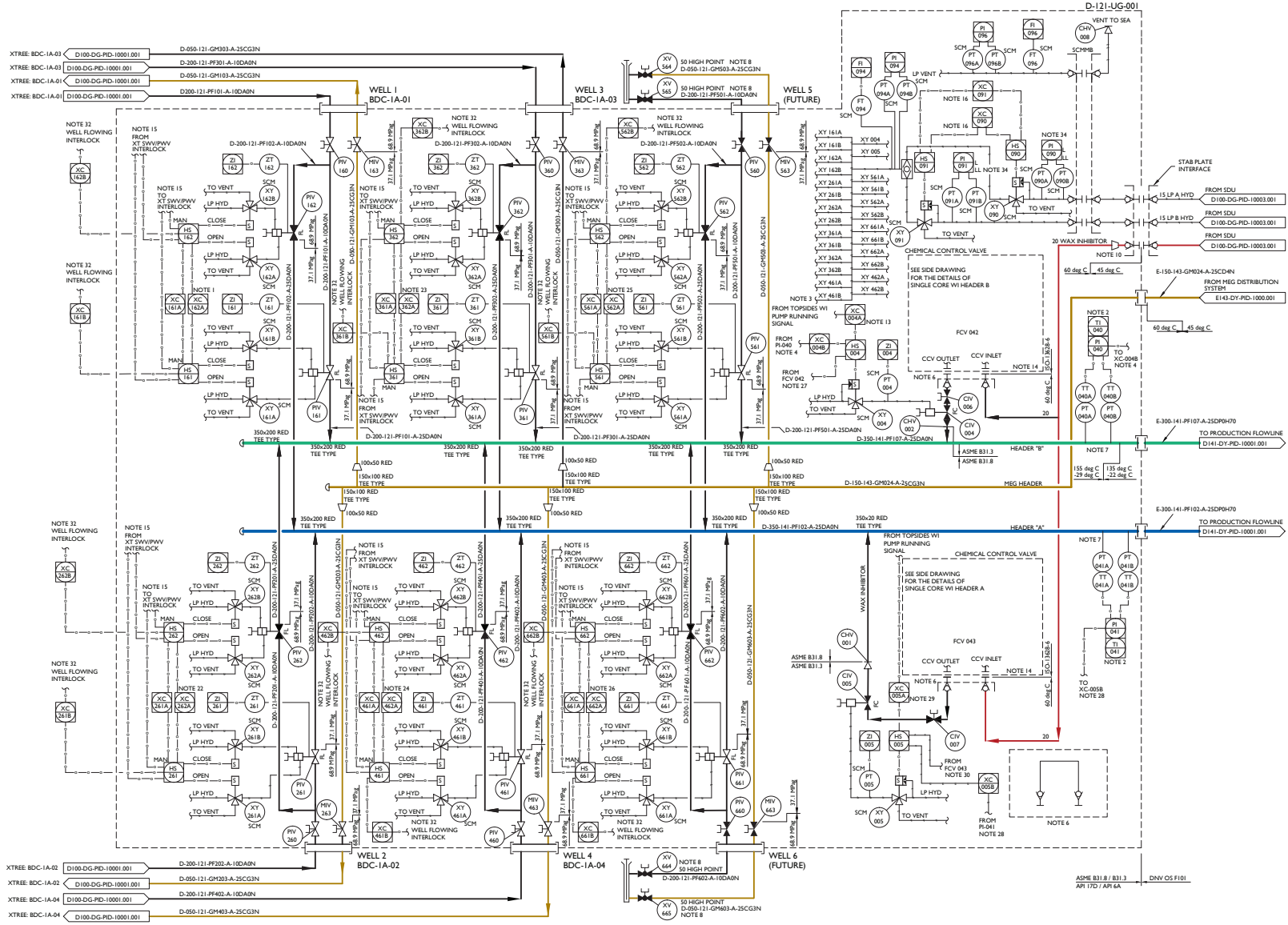

8.6 Manifold Hydraulic Schematic

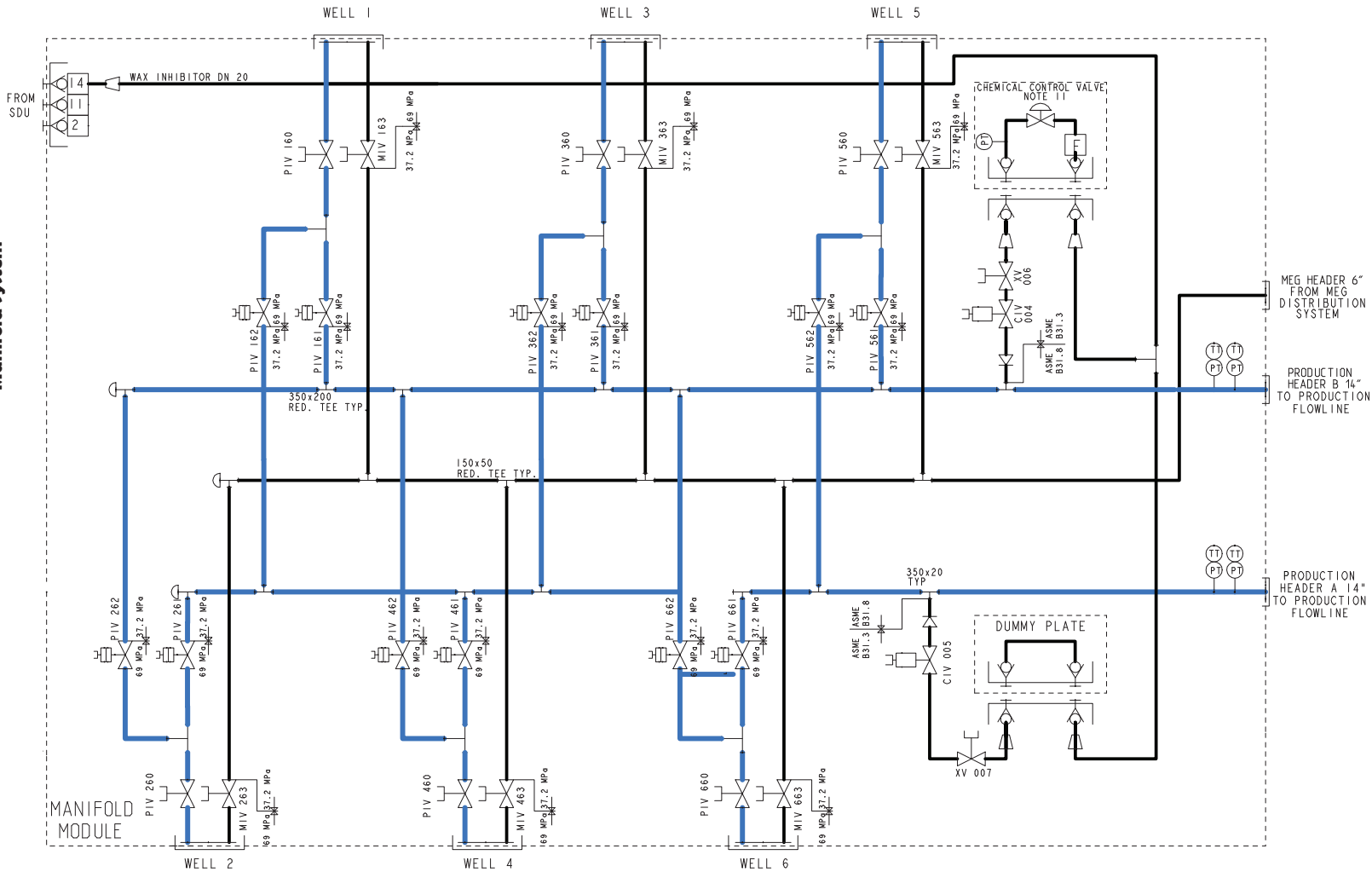

8.7 Subsea Control Module Schematic

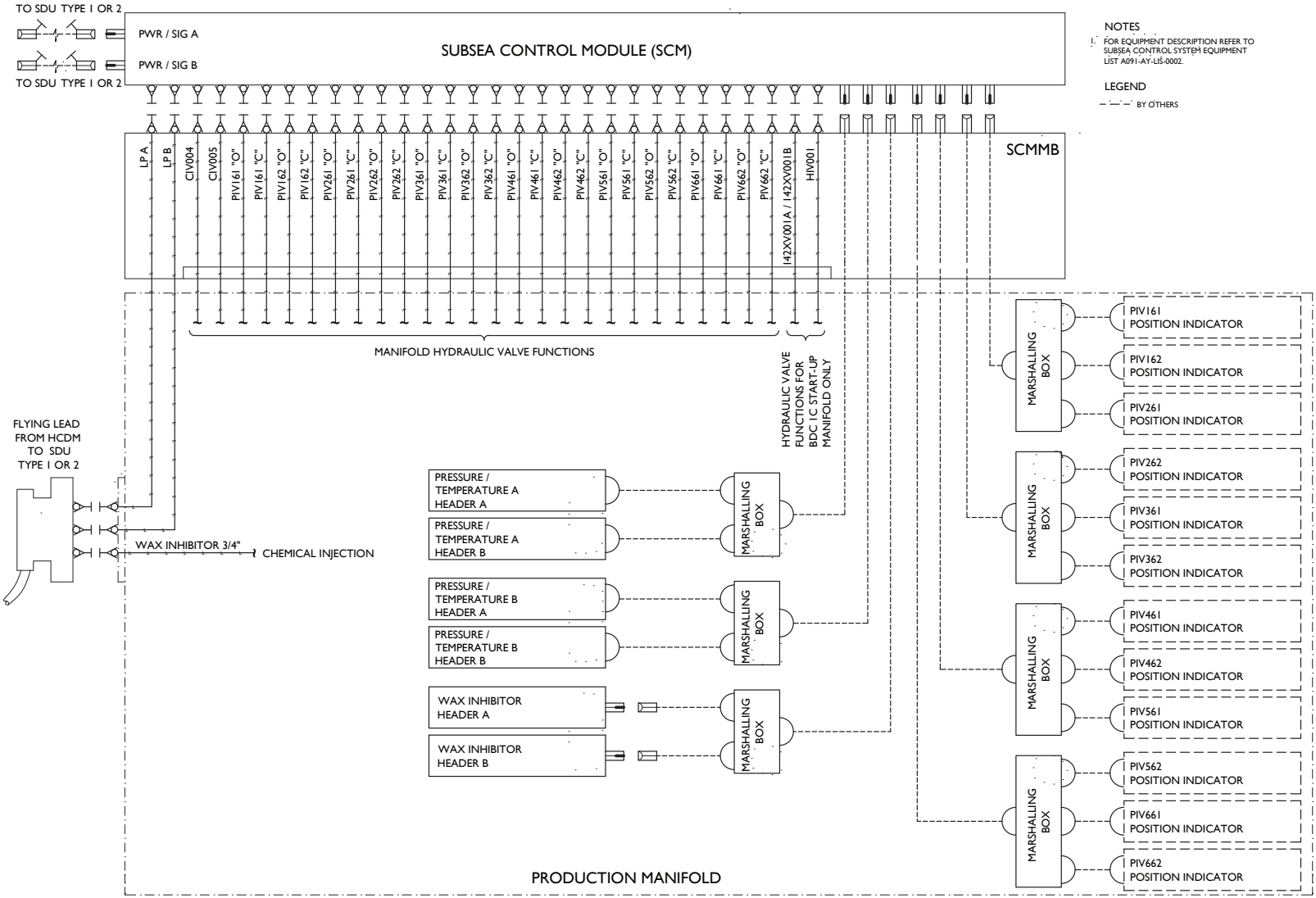

8.8 Manifold Marking Drawings

Top View

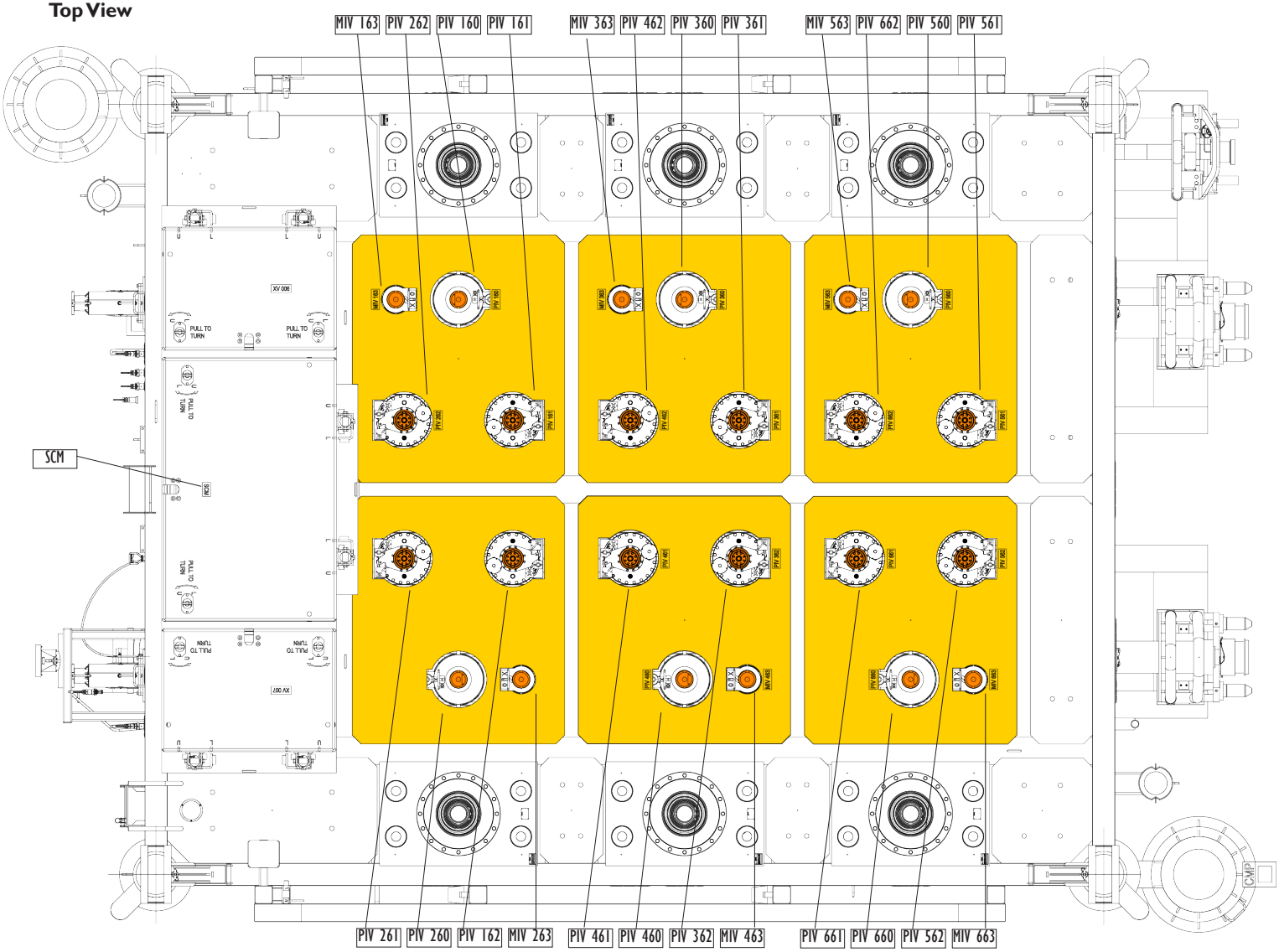

Top View - Detail

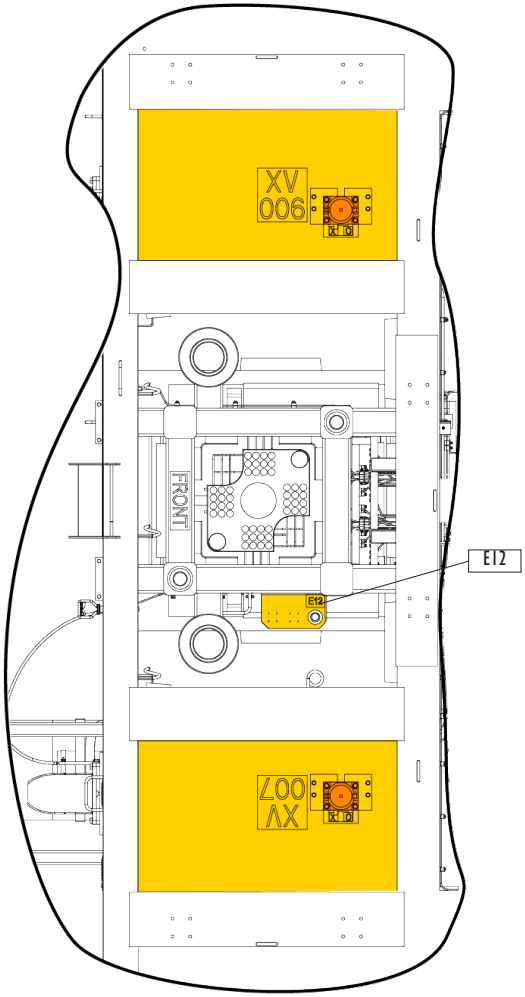

Left View

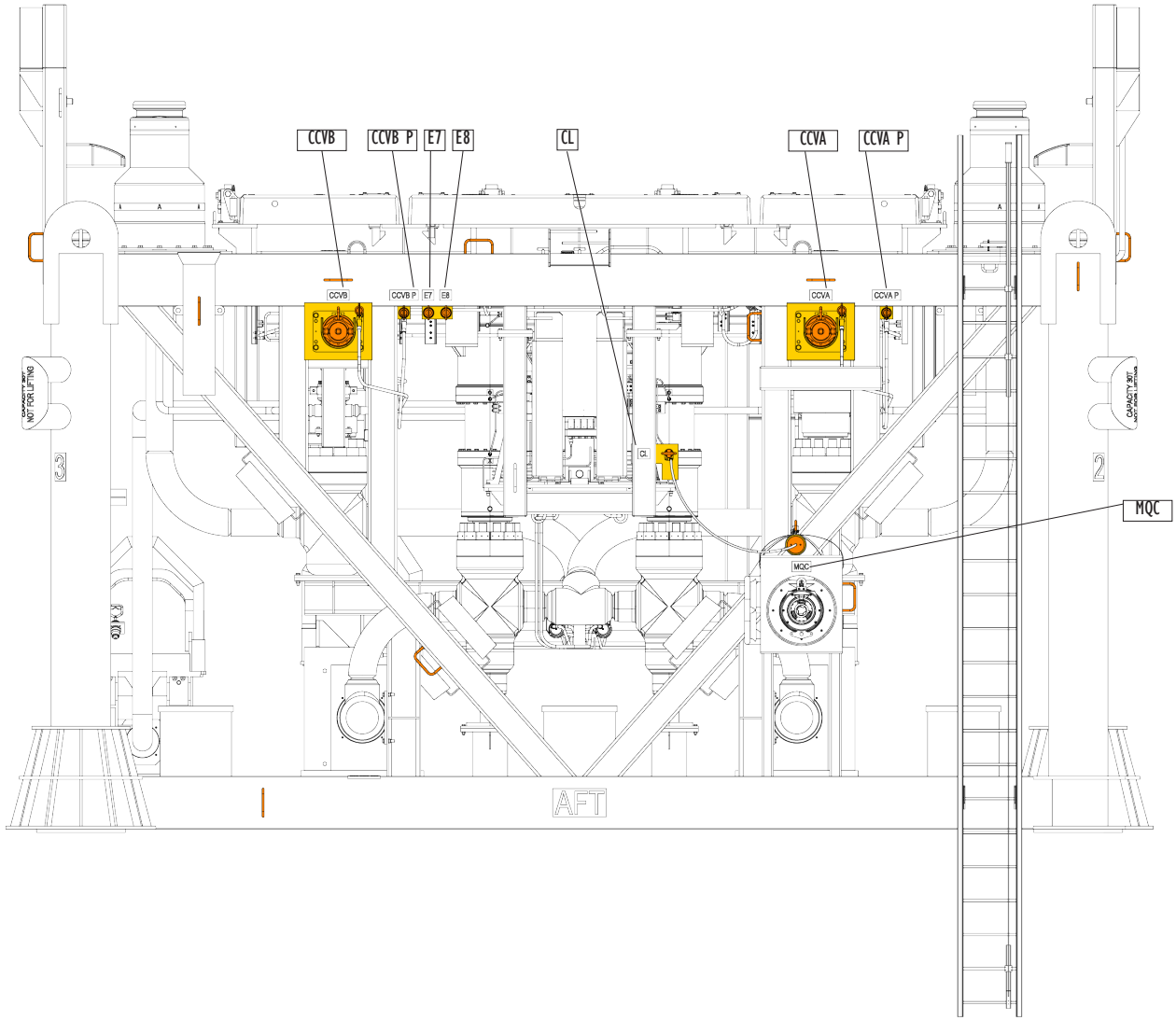

Right View

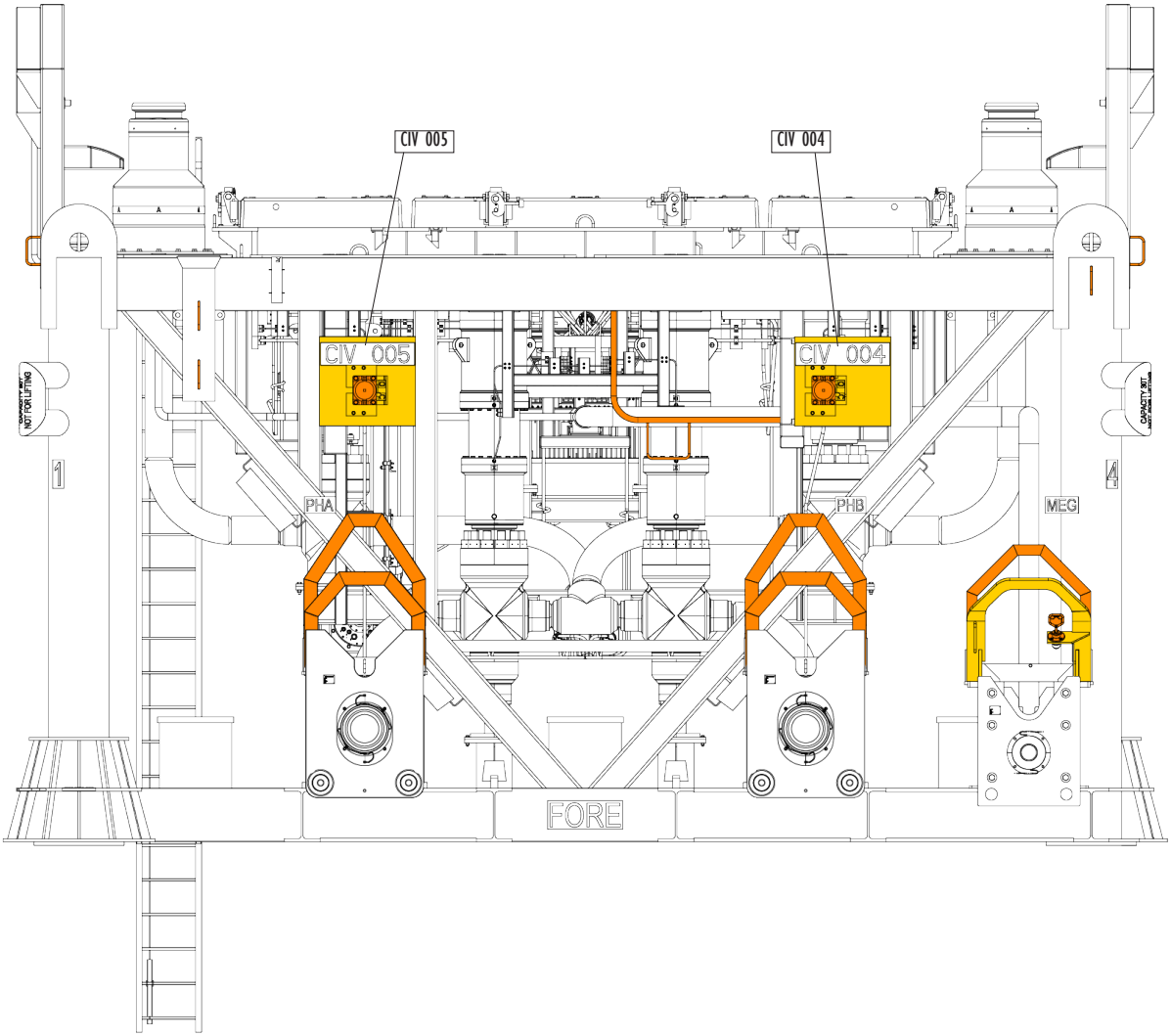
CIV 005
CIV 004
CIV 005
CIV 004
PHA
PHB
MEG
FORE
NOT FOR LIFTING
CAPACITY 30T

8.9 Manifold Data Table

Manifold specifications					
General					
Manifold Type	Cluster				
Support Type	Foundation with Mudmat, Skirts and Intermediate Frame including Levelling System				
Levelling System Capacity	2.5 °				
Number of Well Slots	6				
Number of Flow Line Spools	2 off Production				
Temperature rating max/min	60 °C/-29 °C				
Dimensions and Weights					
Dimension, combined structure outer extremes	Length [mm]		Width [mm]		Height [mm]
BDC-1A	15913		13640		10036
BDC-1B	16491		17478		9836
BDC-1C	16491		17478		9536
BDC-4	15913		13640		9436
BDC-5	19478		20978		9836
Dimension, Module Main Structure Outline	10730		8760		4910
Dimension, Foundation Main Structure Outline					
BDC-1A	15020		12100		1970
BDC-1B	15400		16700		1970
BDC-1C	15400		16700		1970
BDC-4	15020		12100		1970
BDC-5	18700		20200		1970
Structure weights	BDC-1A	BDC-1B	BDC-1C	BDC-4	BDC-5
Load-out Weight, Combined Structure	370 mT	391 mT	389 mT	366 mT	432 mT
Installation Weight in air, Combined Structure	412 mT	434 mT	431 mT	408 mT	475 mT
In-place Weight, Combined Structure	313 mT	332 mT	330 mT	310 mT	367 mT
Piping specific					
Design Pressure – production system	690 bar from well jumper to hydraulically actuated gate valve 372 bar from hydraulically actuated gate valve to flow line connector				
Design Pressure - MEG	372 bar from flow line connector to branch line 690 bar from ROV operated gate valve to well jumper connector				

Description	Interface / tool / equipment
General	
Installation equipment	Spreader bar w/slings
Release of lifting equipment	WROV
Make-up of Electrical Flying Lead	WROV
Make-up of Steel Tube Flying Lead	FLOT / WROV
Operation of roof hatches	WROV / ROV hook
Operation of 2 1/16" ROV operated gate valves	Torque Tool ISO 13628-8 class 2
Operation of ¾" ROV operated gate valves	Torque Tool ISO 13628-8 class 2
Operation of ¾" ROV override gate valves	Torque Tool ISO 13628-8 class 2
Operation of 7 1/16" ROV operated gate valves	Torque Tool ISO 13628-8 class 4
Operation of 7 1/16" ROV override gate valves	Torque Tool ISO 13628-8 class 4

Description	Interface / tool / equipment
Replacement of SCM	RCR with appurtenant tools/interfaces,
Operation of HCS-R flow line tie-in spools	CPI equipment
Operation of HCS MEG tie-in spools	CPI equipment
Operation of VCCS	Torque Tool ISO 13628-8 Class 5 for Clamp Operation. ISO 13628-8 Type B Hot Stab for Back Seal testing and operation of VCCT.
Installation/Retrieval of CCV Unit	WROV
Levelling Operation	WROV with ISO 13628-8 Type B dual port Hot Stab. Levelling Jack.
Indicators	
2 1/16" ROV Operated Gate Valves	X – O (Closed - Open)
¾" ROV Operated Gate Valves	X – O (Closed - Open)
¾" ROV Override Gate Valves	X – O (Closed - Open)
7 1/16" ROV Operated Gate Valves	X – O (Closed - Open)
7 1/16" ROV Override Gate valves	X – O, N (Closed – Open, Neutral)
Roof Hatch	L – U (Locked – Unlocked)
Roof Hatch Lock	L – U (Locked – Unlocked)
Roof Hatch Hinge Lock (for Hatch Retrieval)	L – U (Locked – Unlocked)
STFL Parking Pedestal Receptacle	L – U (Locked – Unlocked)
Levelling Shim Stack	L – U (Locked – Unlocked)
Levelling Indicator	60 - 600 mm scale
Foundation Penetration Marks	50 – 950 mm scale (BDC-1A) 50 – 750 mm scale (BDC-1B) 50 – 450 mm scale (BDC-1C) 50 – 350 mm scale (BDC-4) 50 – 750 mm scale (BDC-5)
Bulls-eye	1-5 degree scale

Valve Torque					
	7 1/16" ROV Gate Valve	7 1/16" Hydraulic Gate Valve	2 1/16" Gate Valve	3/4" ROV Gate Valve	3/4"# Hydraulic Actuated Gate Valve
Direction of rotation to open	CCW	CCW	CCW	CCW	CCW
No. of turns to operate	90	90	49	10	6 +/- 1
Normal torque (Nm)	80	80 (Override)	66	68	163 (Override)
Max. torque (Nm)	2700	2700 (Override)	270	95	271 (Override)

9 Well Jumper

9.1 Scope of Supply

ACOUSTIC SAND DETECTOR

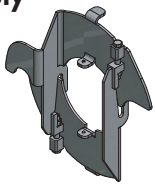

SUPPORT CLAMP

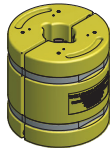

BUOYANCY

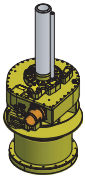

DOWNFACING VCCS 450

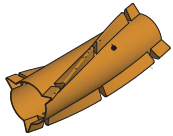

STRAKE

COLLAR CLAMP

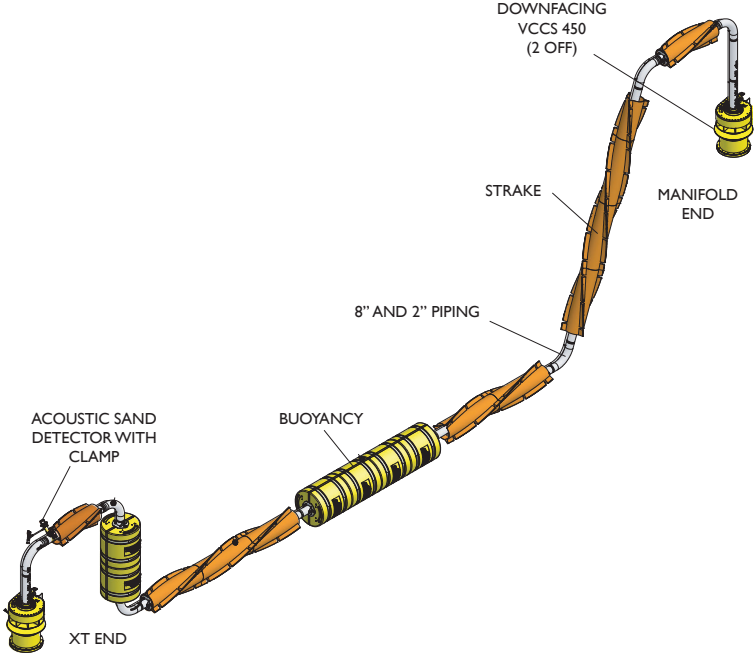

9.2 Well Jumper, Data Table

Data Table	
Length	Typical 30 m (+/- 5 m)
Height	Typical 6.5 m
Design Pressure	69 MPa (690 bar)
Design Temperature	-29/155 °C for 8” / 0-60 °C for 2”
Piping Material	8” production piping: 25 %Cr Duplex / 2” MEG: API 5L X65 Carbon steel (3 mm CA)
Large Bore Dimension	8” (GAS CONDENSATE SYSTEM)
Small Bore Dimension	2” (MEG SYSTEM)

10 VCCS System

10.1 Scope of Supply

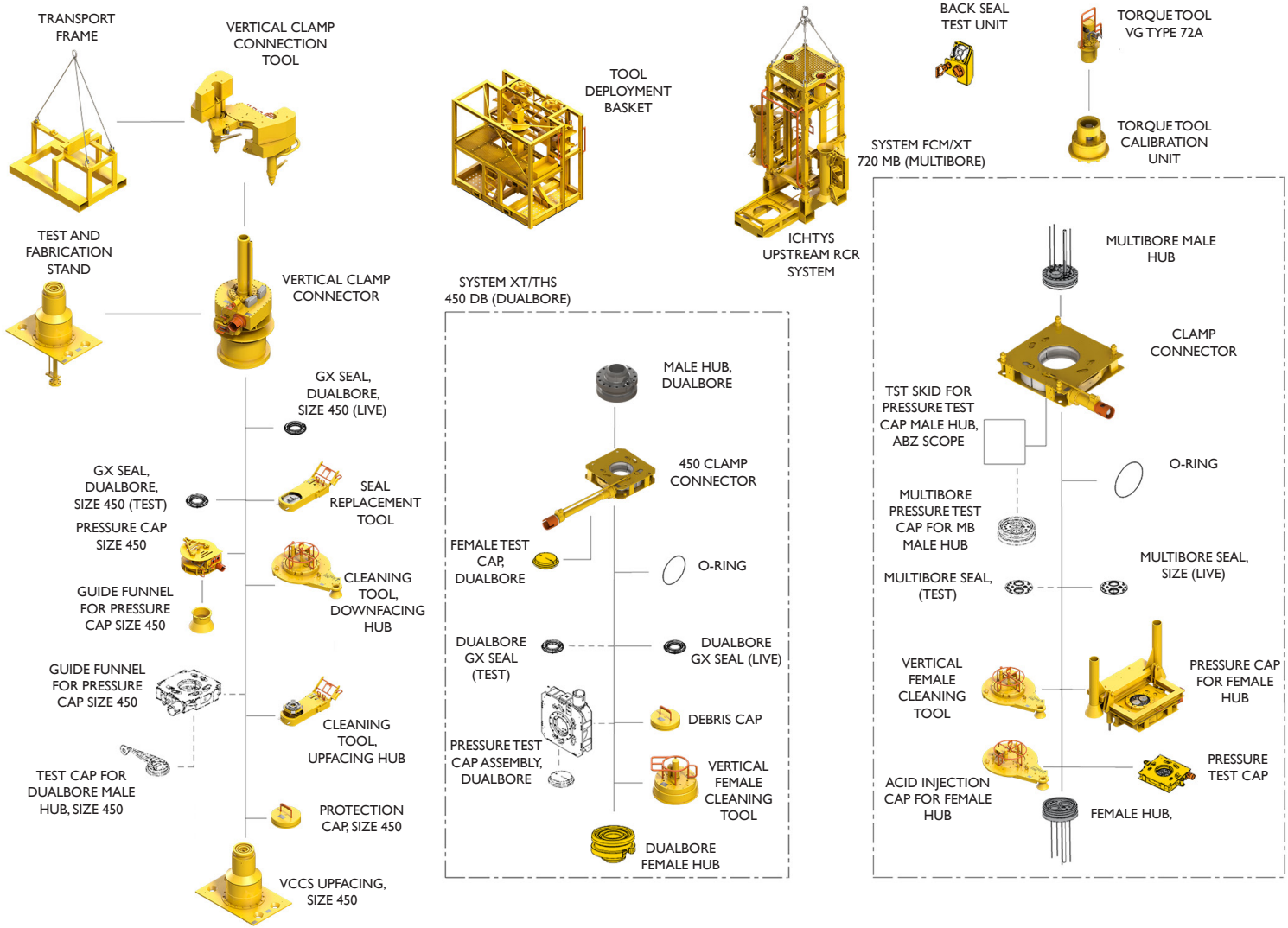

10.2 720 VCCS Multibore Hub

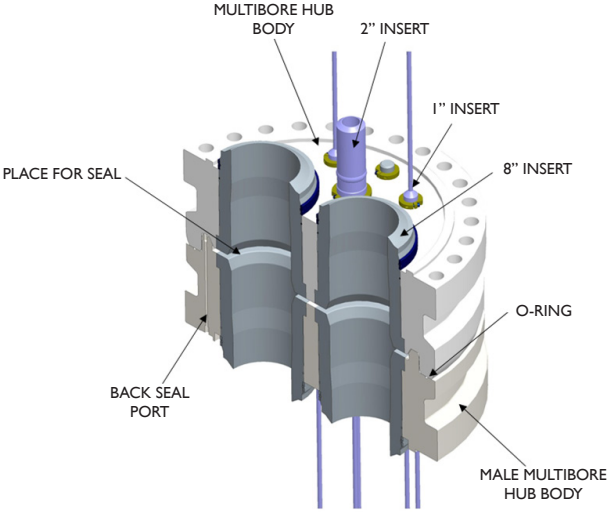

10.3 450 VCCS Dualbore Hub

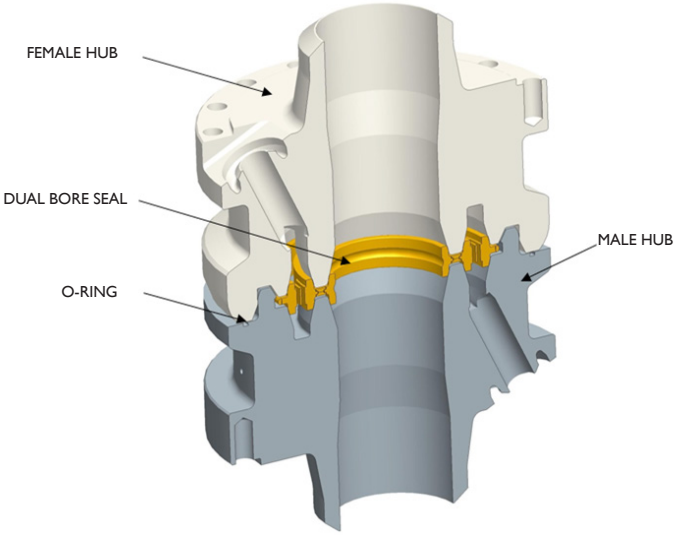

10.4 450 Pressure Cap

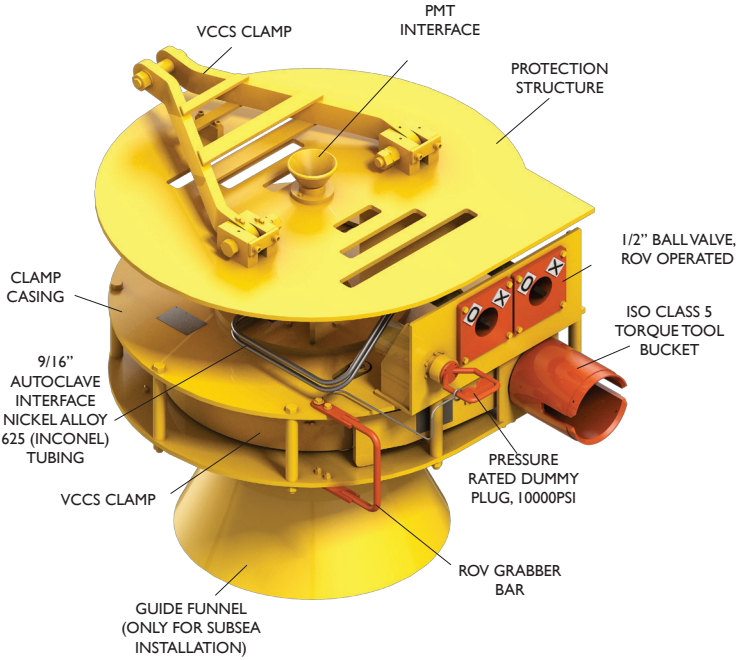

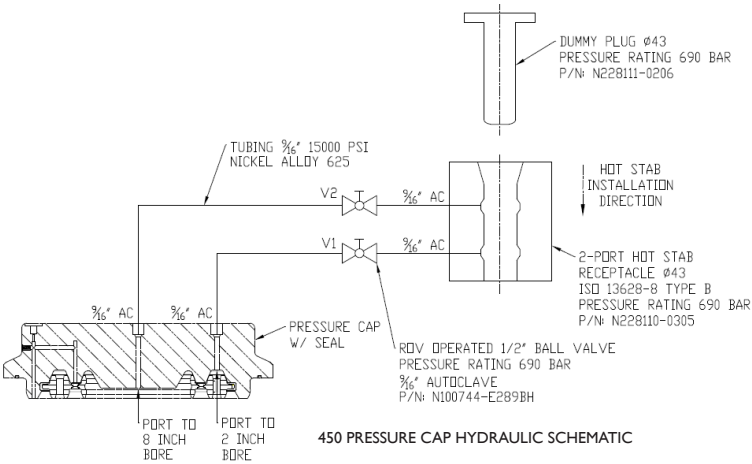

450 PRESSURE CAP HYDRAULIC SCHEMATIC

10.5 450 Pressure Cap, Data Table

Pressure Cap	
Dimensions (L x W x H): Lifting Handle up and with Guide Funnel Lifting Handle up and without Guide Funnel	 1200 mm x 1417 mm x 1387 mm 1200 mm x 1414 mm x 1387 mm
Weight (dry/submerged)	1428 kg / 1242 kg
Depth Rate	3500 m
Hydraulic Pressure Rate	690 bar
Maximum Test Pressure	With Valve closed: 690 bar With Vlave partially open: 1035 bar
Maximum landing velocity	0,3 m/s
ROV	
ROV Grabber Bar Dimensions	237 mm x 275 mm x Ø20 mm
1/2" Ball Valve, ROV Operated ISO 10423 (API 6A)	Turn to Close: 1/4 turn CW Nominal Torque: 68 Nm Maximum Torque: 170 Nm
Hot Stab, ISO 13628-8, Type B	
Pressure Rated Dummy Plug	10000 psi D Handle
Dual Port Hot Stab	Design Pressure Rate: 690 bar D Handle
Hot Stab Receptacle	9/16" Autoclave Interface 2 Ports
Torque Tool	
Clamp Connector, size 450, Torque Bucket: ISO 13628-8 Class 5	Subsea Operation Running torque: 800 Nm Max torque: 2200 Nm
Lifting Handle	
Dimensions (L x W x H):	660 mm x 104 mm x 745 mm
Lifting Hook:	11.5 mT ROV Shank Hook

10.6 720 Pressure Cap

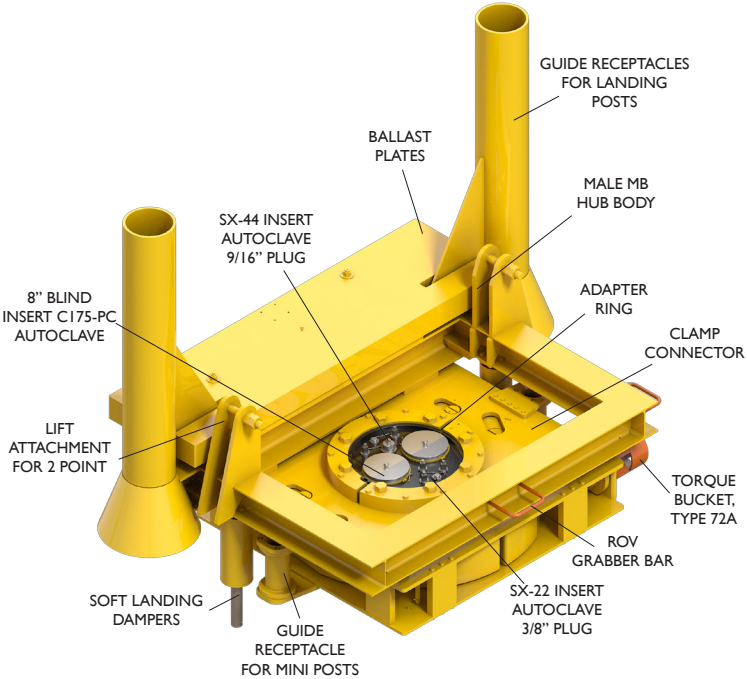

10.7 720 Pressure Cap, Data Table

Data Table	
Dimensions (L x W x H):	3124 mm x 1954 mm x 2573 mm
Weight (dry/submerged)	7018 kg / 6104 kg
MB 720 Torque Bucket	Type 72 A
MB 720 Clamp position Indicator	Marking (X & O) given on Clamp Casing
ROV Grabber Bars	Marking ROV Grabber Bar only, on Lift and Guide Frame
Lifting Arrangement	For 2-point Lift Set by 11.5 Tonne ROV Hook for Crane.
Maximum Test Pressure	1035 bar (15000 psi)
Max landing velocity (du to Soft Landing Cylinders)	0.2 m/s
Maximum Lowering Velocity	5 m/s

10.8 Vertical Clamp Connection Tool (VCCT)

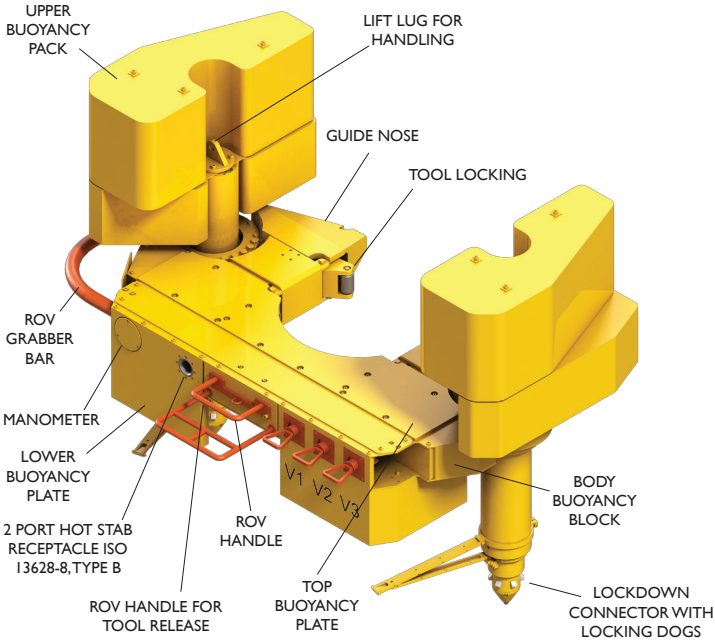

10.9 VCCT, Data Table

Data Table	
Dimensions (L x W x H):	Maximum 2108 mm x 1325 mm x 2147 mm (Depending on Connection Size and Depth rating)
Weight Range (dry/submerged)	450-550 kg / 30-50 kg (Depending on Connection Size and Depth rating)
Nominal Stroking Cylinder force	200 kN
Maximum Stroking Cylinder force	245 kN
Depth Rate	600 m or 2000 m depending on Buoyancy Type
Design life	40 years
Hydraulic Pressure rate	207 bar (3000 psi)
Submerge Time	Maximum 120 hours
Maximum Landing Velocity	To be installed by ROV (0.2m/s)
Maximum Lowering Velocity	5 m/s

10.10 Remote Component Replacement Tool (RCR)

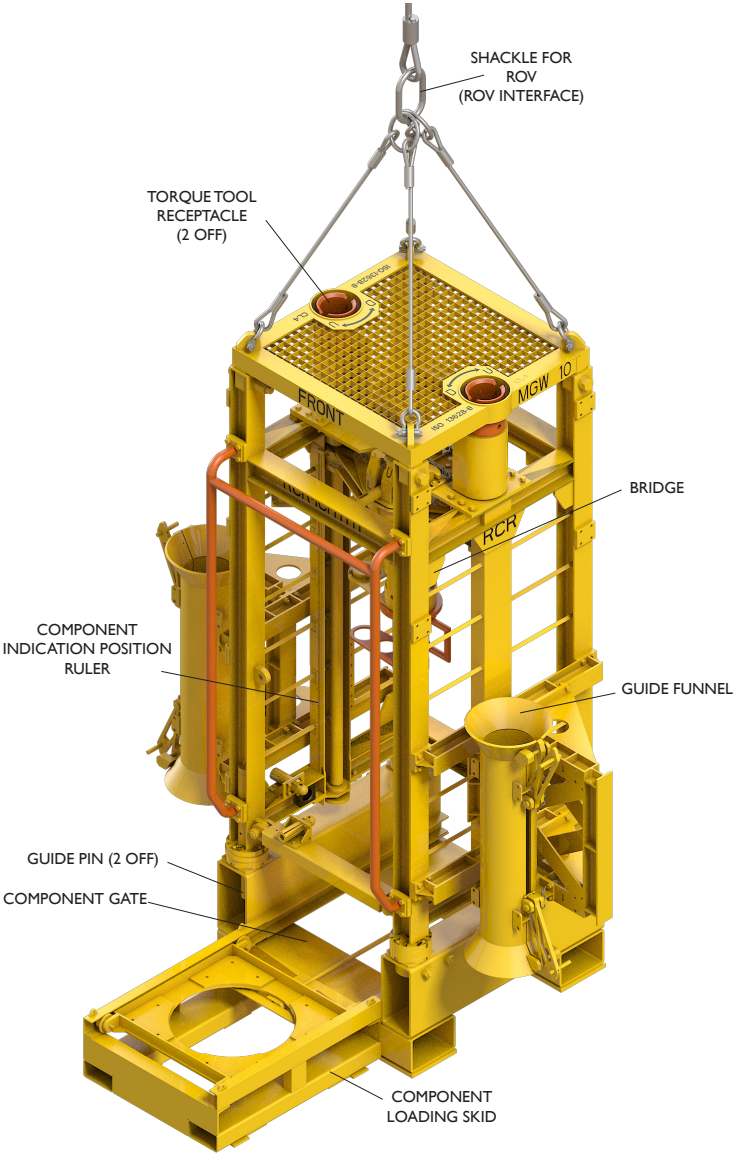

10.11 RCR Data Table

Data Table	
Dimensions including TS (LxWxH) - without slings: - with tensioned slings: - with tensioned slings and forerunner	 2.89m x 1.5m x 3.7m (114” x 59” x 146”) 2.89m x 1.5m x 5.2m (114” x 59” x 205”) 2.89m x 1.5m x 7.7m (114” x 59” x 303”)
Transport Skid (TS), Dimensions (L x W x H)	1.3 m x 1.4 m x 0.7 m (51.2” x 54.7” x 25”)
Component Loading Skid (CLS), Dimensions (L x W x H)	1.2 m x 0.9 m x 0.4 m (46” x 35.4”x 13.8”)
RCR Weight (dry)/(submerged)	2306 kg/2001 kg (5084 lbs/4411 lbs)
Skid Weight (dry)	606 kg (1336 lbs)
Transport Skid [TS], Weight	606 kg (1336 lbs)
Component Loading Skid [CLS], Weight	208 kg (459 lbs)
Maximum component dry weight	2000 kg (4410 lbs)
Maximum elevator stroke	1865 mm (73.42”)
Bridge pull force	0 to 45.0 kN (0 to 10116 lbf) Approx. 0-850 Nm
Bridge push force	0 to 14.0 kN (0 to 3147 lbf) Approx. 0-150 Nm
Maximum lowering velocity	5 m/s (16.4 ft/sec)
Recommended landing velocity	0.2 m/s (0.98 ft/sec.)
Maximum landing velocity	0.5 m/s (1.64 ft/sec.)
Maximum allowable hook load, RCR	10 Tonnes
Bridge Elevator	2 off. Torque Buckets for Running Elevator up or down, driven by Vertical Insertion of an ISO 13628-8 Class 4 Torque Tool.
Component Lock Device	1 off T-bar for Locking/Unlocking onto Component by pulling up and lift (lock) or pulling out and let down.
Bridge Elevator	Direction Indicators “U” for running up and “D” for running down.
Component Lock device	Position indicators “U” for Unlocked and “L” for locked.
Lock/unlock flag	Lifting dog in inner Position indicates Locked to Component
Mandrel Indicator	Flag Indicator in top position indicated for entered mandrel and ready for locking/unlocking Component
Bridge/Bridge-insert lift-off	Bridge/Bridge-insert lift-off indicated load applied to component during installation which also mean it is ready for locking/unlocking Component

11 HCCS System

11.1 Scope of Supply

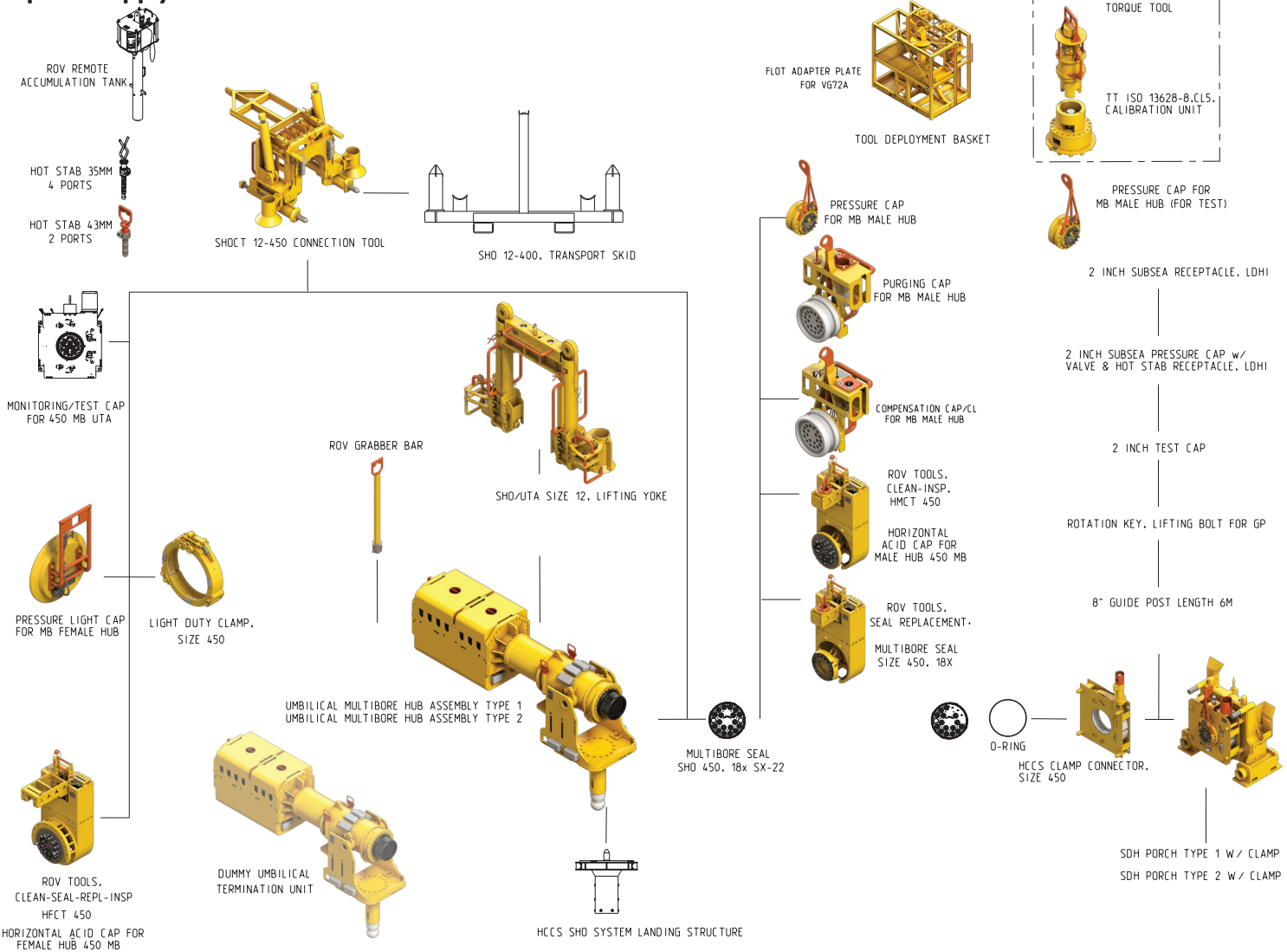

11.2 Multibore Hub (MBH)

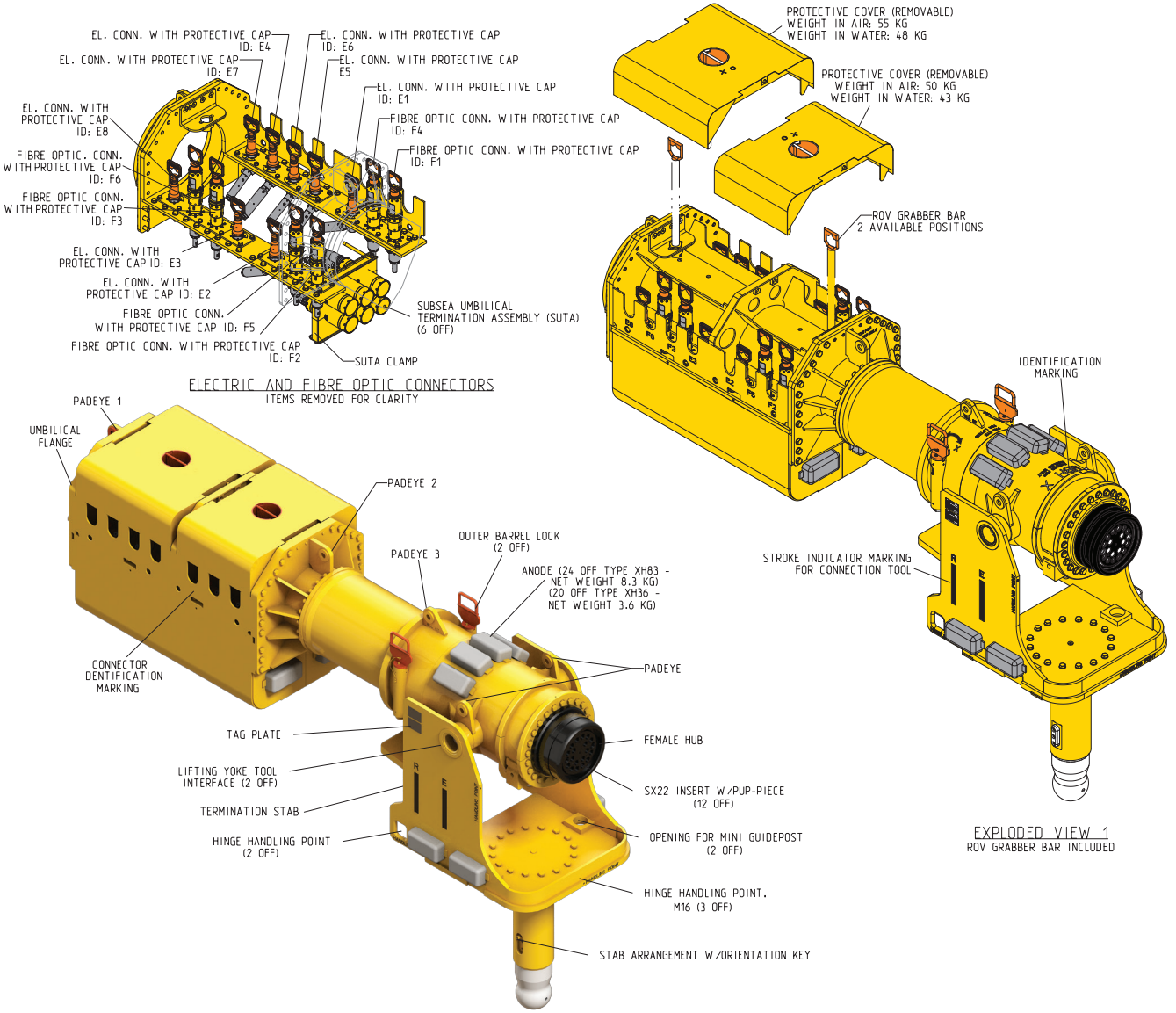

11.3 MBH Data Table

Description MBH Umbilical Termination	Data
With Termination Stab hanging down perpendicular from MBH Umbilical Termination Dimensions	(L x W x H) 4502 mm x 1131 mm x 2783 mm
With Termination Stab in line with MBH Umbilical Termination body Dimensions	(L x W x H) 6059 mm x 1131 mm x 1471 mm
Without termination stab and hub protection cap	(L x W x H) 4485 mm x 1076 mm x 1247 mm
Weight, complete assembly (dry/submerged)	5550 kg / 4780 kg
Weight Protection Cover (dry/submerged)	Small - Approx. 50 kg / 43 kg Large - Approx. 55 kg / 48 kg
Design pressure - High Pressure-HP	690 bar
Design pressure - Low Pressure-LP	345 bar
Ultimate limit state maximum landing speed	0.3 m/s
Accidental limit state maximum landing speed	0.5 m/s
Pad eyes for lifting	WLL 6 ton (interface for WLL 13.5 ton Shackles)

11.4 SHO Connection Tool

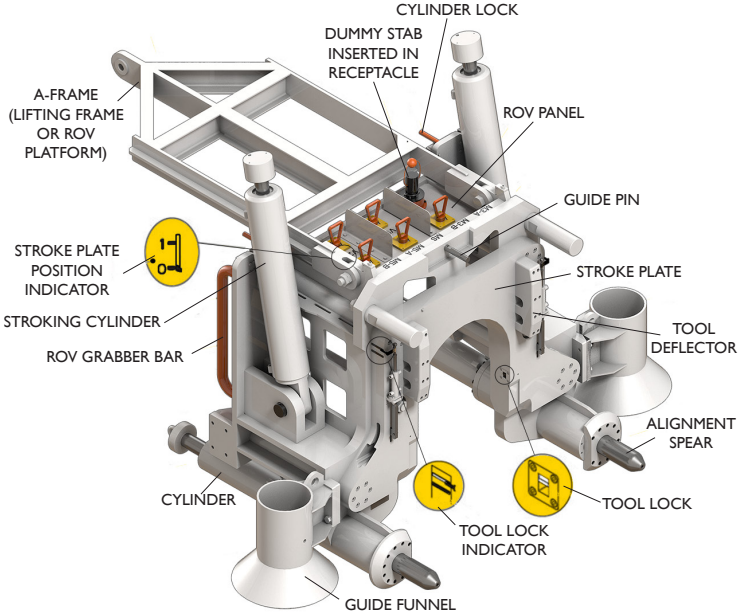

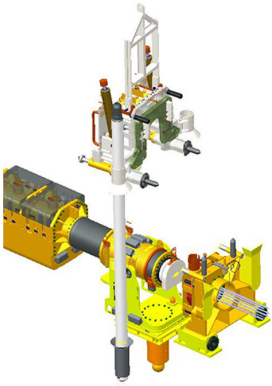

- Landing of SHOCT by use of guidepost.

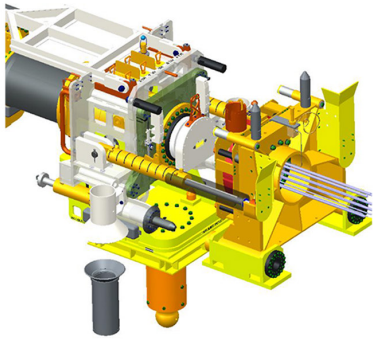

- SHOCT locked onto the MBH UTA.
- Guidepost removed.
- Main stroking cylinders extended and lowered into inboard porch cradles.
- Seal replacement and cleaning operations of inboard hub will start.

TYPICAL INSTALLATION SEQUENCES

11.5 SHO Connection Tool, Data Table

Description	Data
SHO CT Dimensions (LxWxH) (Vertical lifting frame and 90 degree tilted lifting frame)	1727 mm x 2733 mm x 3480 mm (67,9" x 107,5" x 137") 2849 mm x 2733 mm x 2033 mm (112,1" x 107,5" x 80")
Weight (dry/submerged)	3157 kg / 2736 kg (6959,9 lbs/6031,8 lbs)
Transport skid	
Dimensions (LxWxH)	2100 mm x 1741 mm x 715 mm (82,6 inch x 68,5 inch x 28,1 inch)
Weight (dry)	730 Kg (1609,3 lbs)
SHO CT & TS	
Dimensions (LxWxH) Vertical lifting frame 90 degree tilted lifting frame	2100 mm x 2733 mm x 3680 mm (82,6" x 107,5" x 144,8") 3130 mm x 2733 mm x 2247 mm (122" x 107,5" x 96,3")
Weight (dry)	3887 kg (8569,3 lbs)
Hydraulic Fluid	Mineral oil (recommended), e.g. Shell Tellus S2V22 or Water Based Oil can be used.
Hydraulic Pressure Rate	207 bar
Hot Stab	Quad (4) Port Hot Stab (ø35 mm), P/N: N103060-01 or N103060-05

12 Subsea Distribution Hub(SDH)

12.1 Scope of Supply

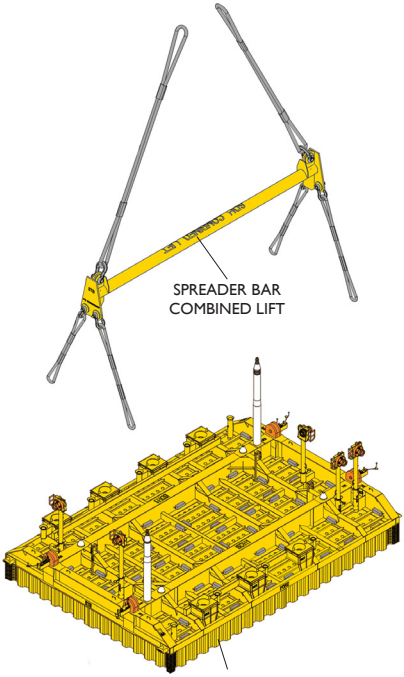

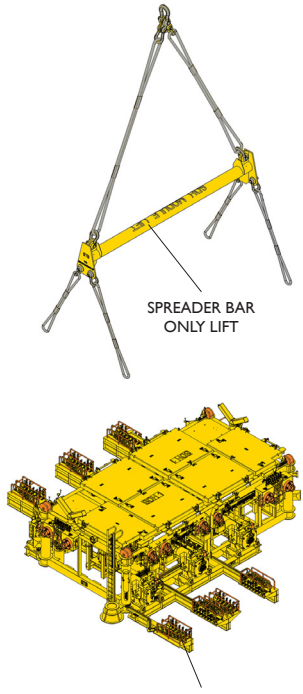

12.2 SDH, General Arrangement

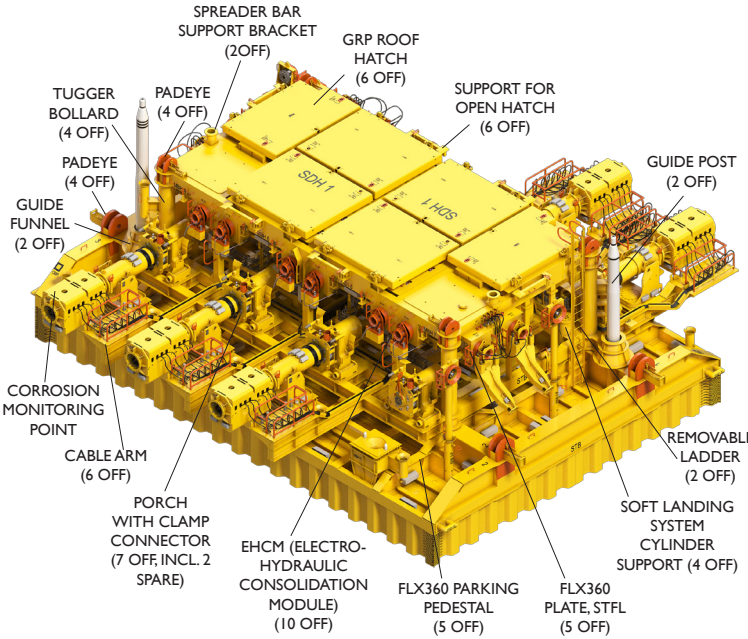

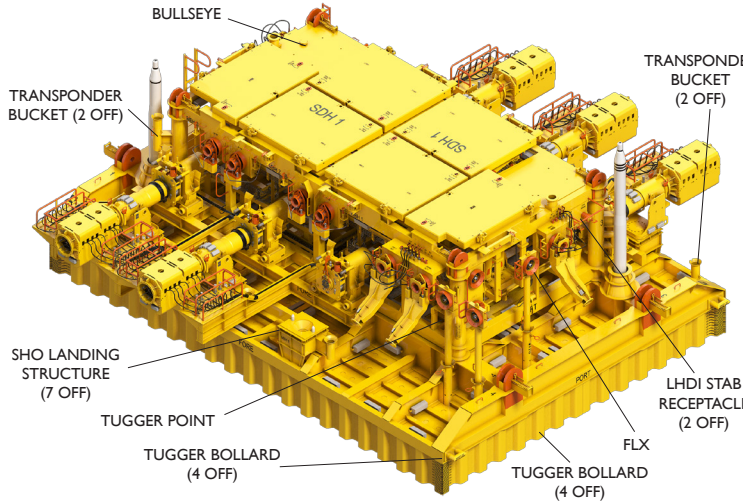

12.3 SDH, Hydraulic Distribution System

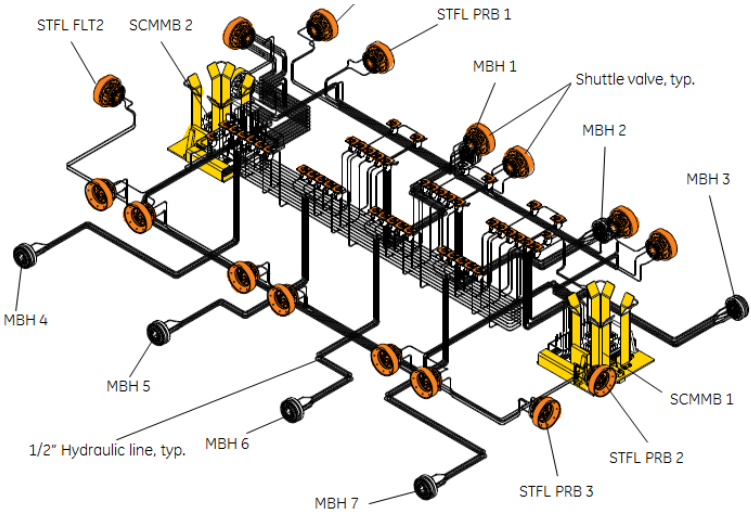

12.4 SDH, Chemical Injection System

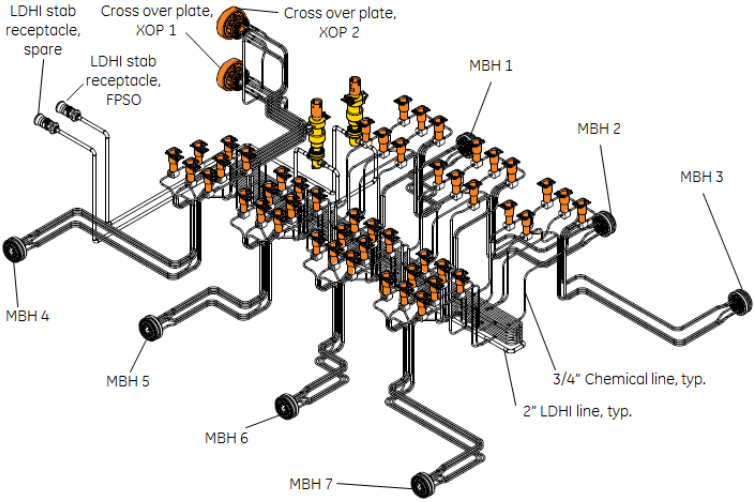

12.5 SDH, Electrical Schematic

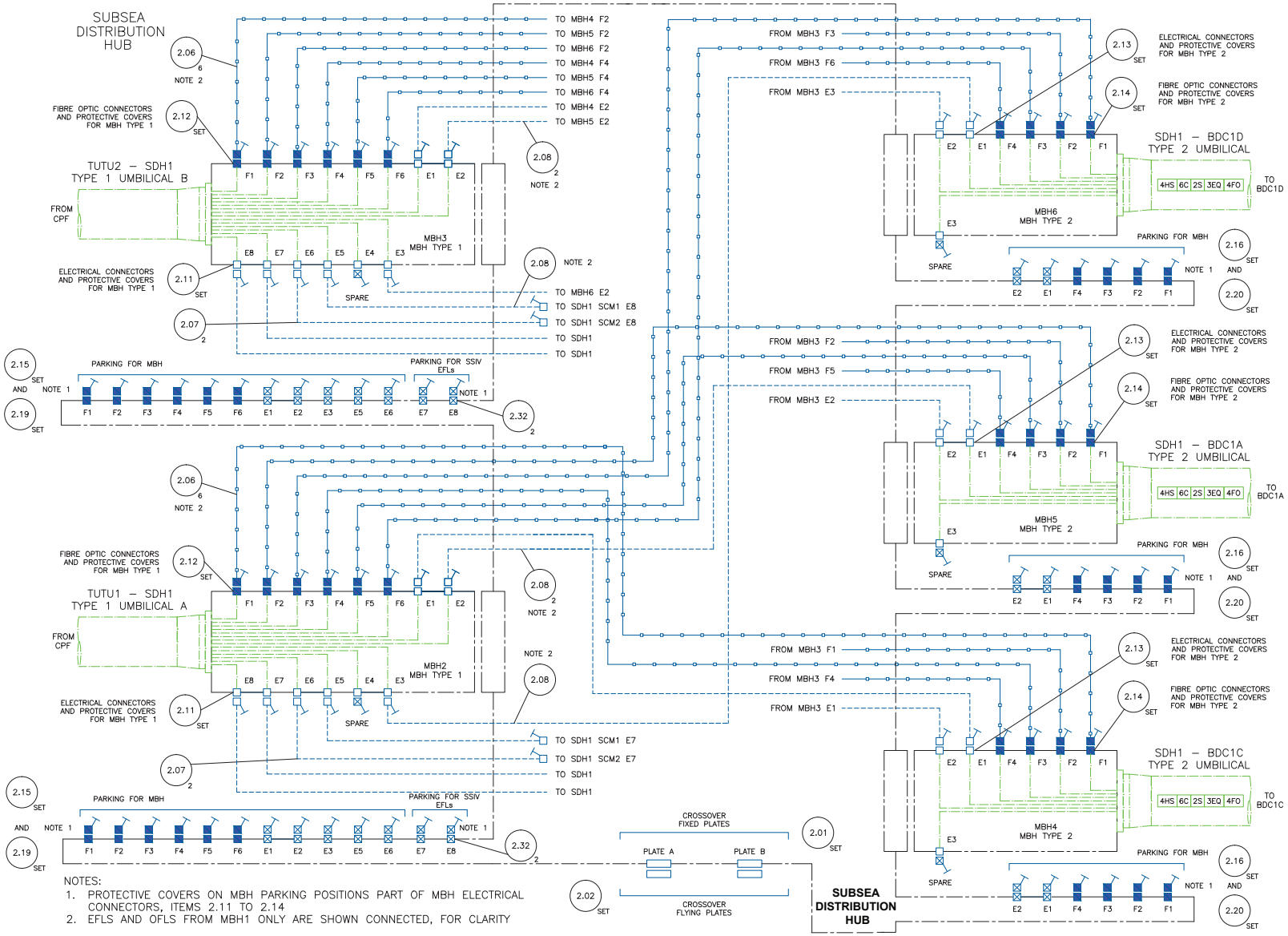

12.6 SDH, Electrical Schematic

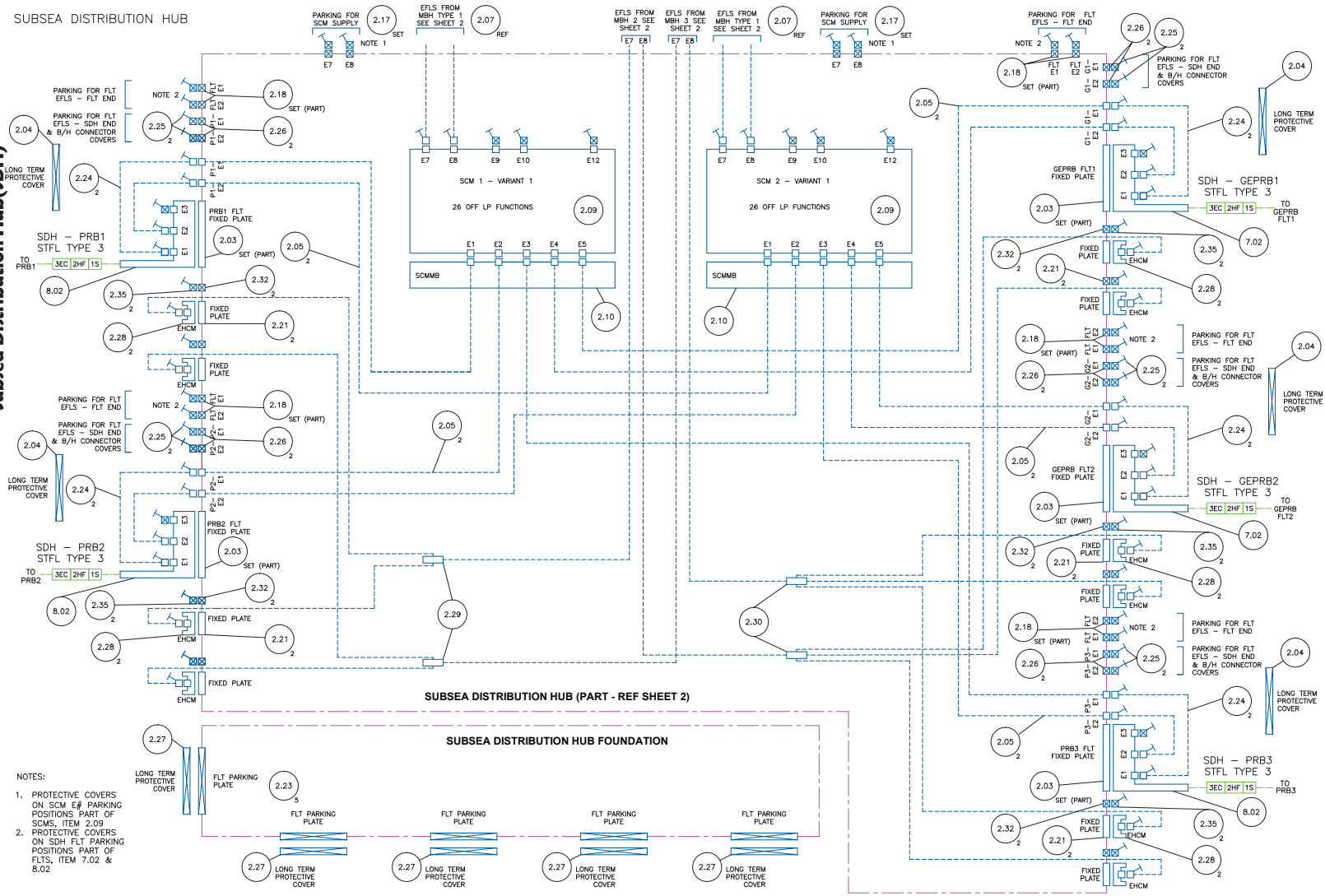

NOTES:

1. PROTECTIVE COVERS ON SCM E# PARKING POSITIONS PART OF SCMS, ITEM 2.09
2. PROTECTIVE COVERS ON SDH FLT PARKING POSITIONS PART OF FLTS, ITEM 7.02 & 8.02

12.7 SDH, Hydraulic Schematic

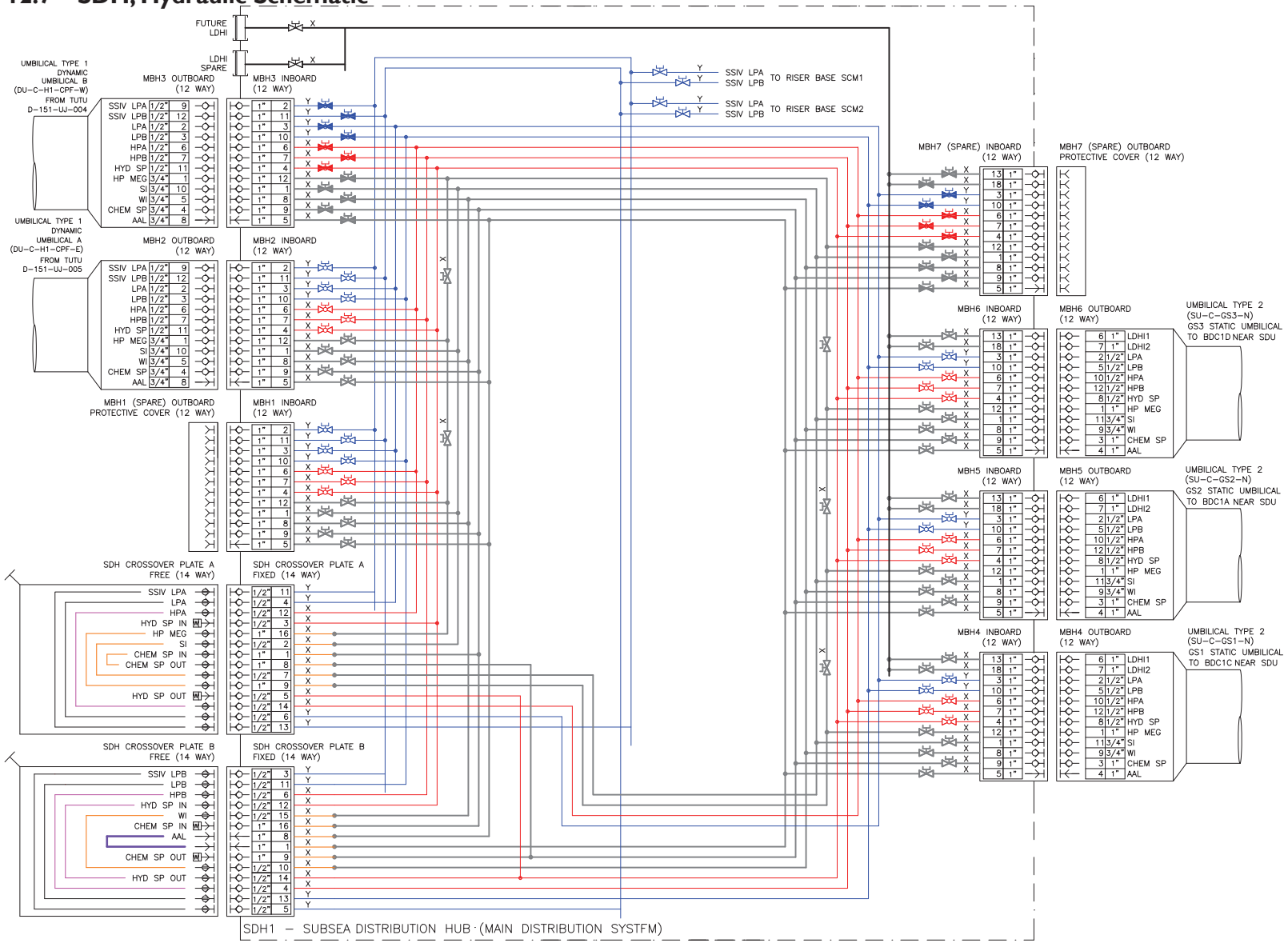

12.8 SDH, Hydraulic Schematic

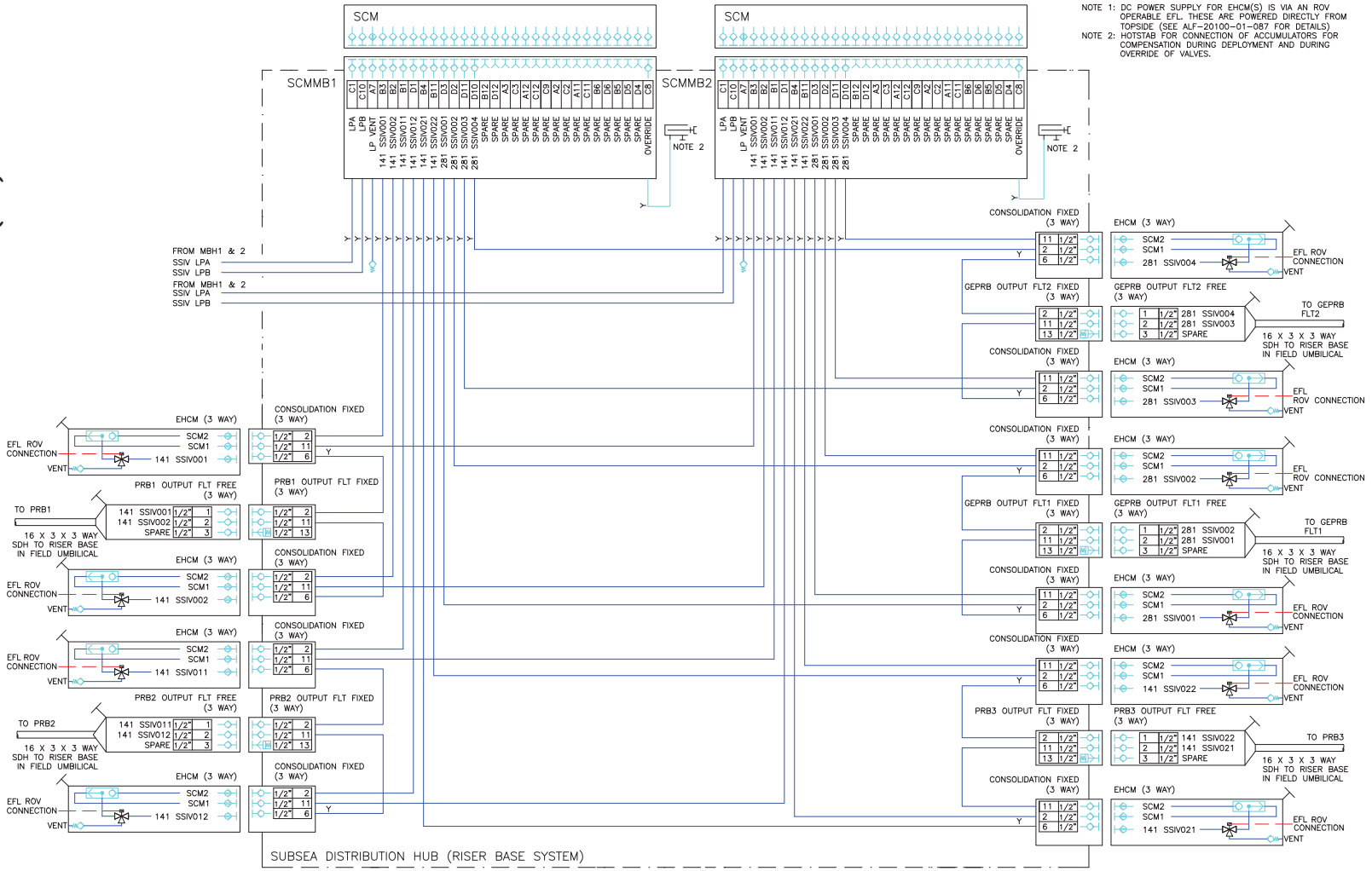

12.9 SDH Marking

Top View

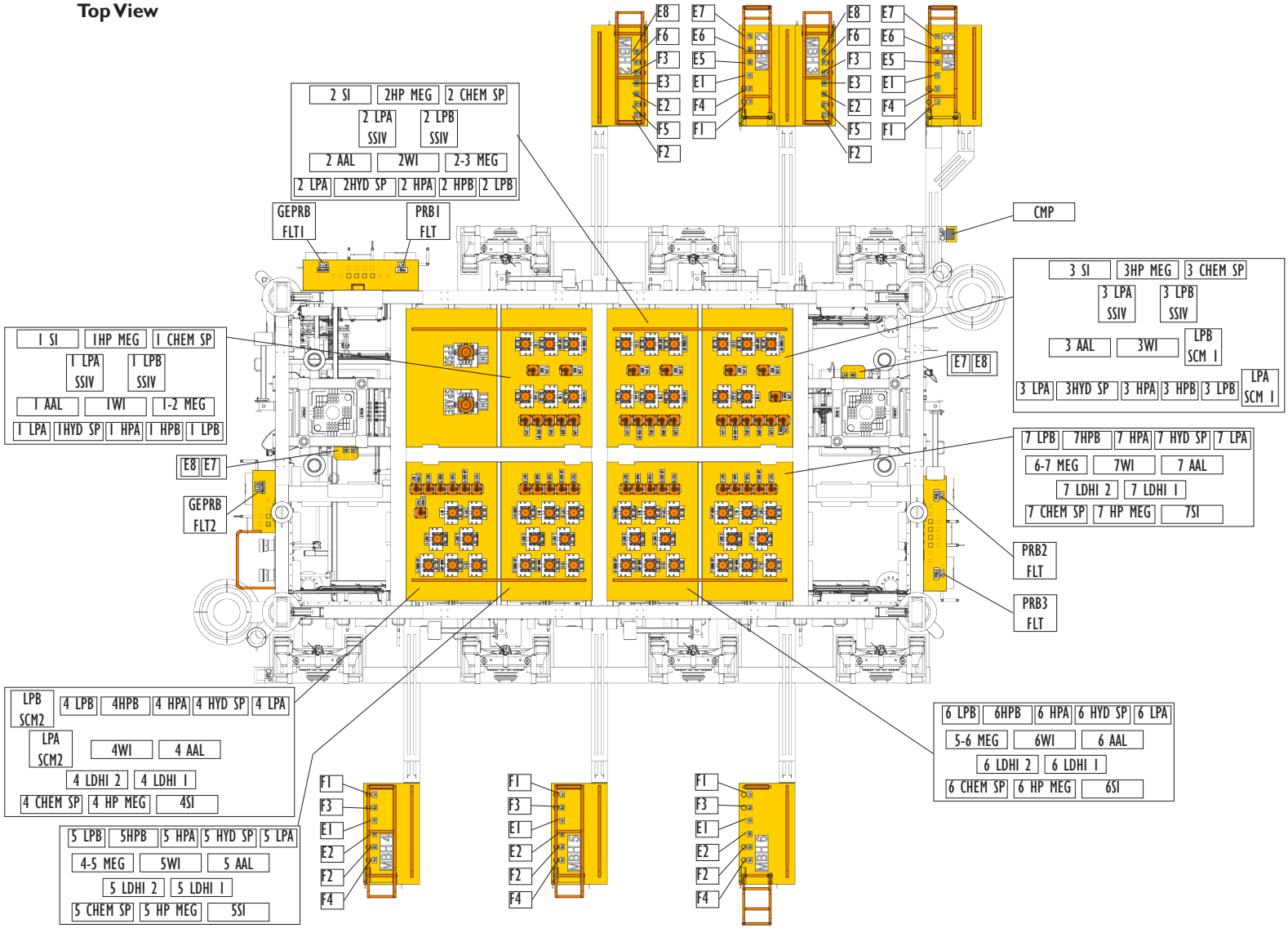

Front View

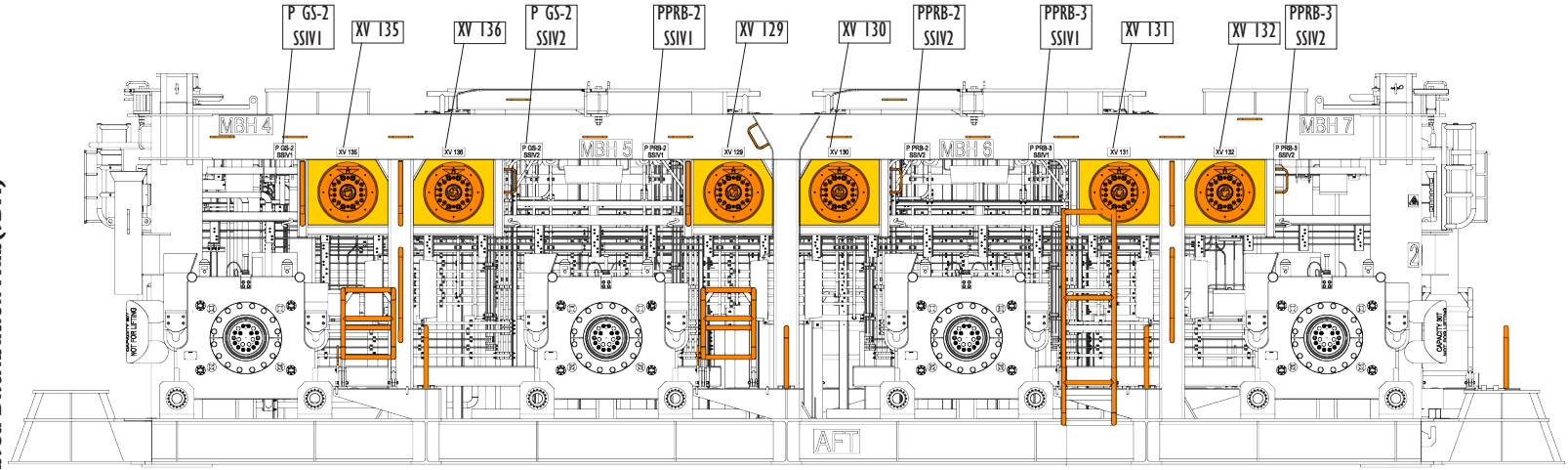

Back View

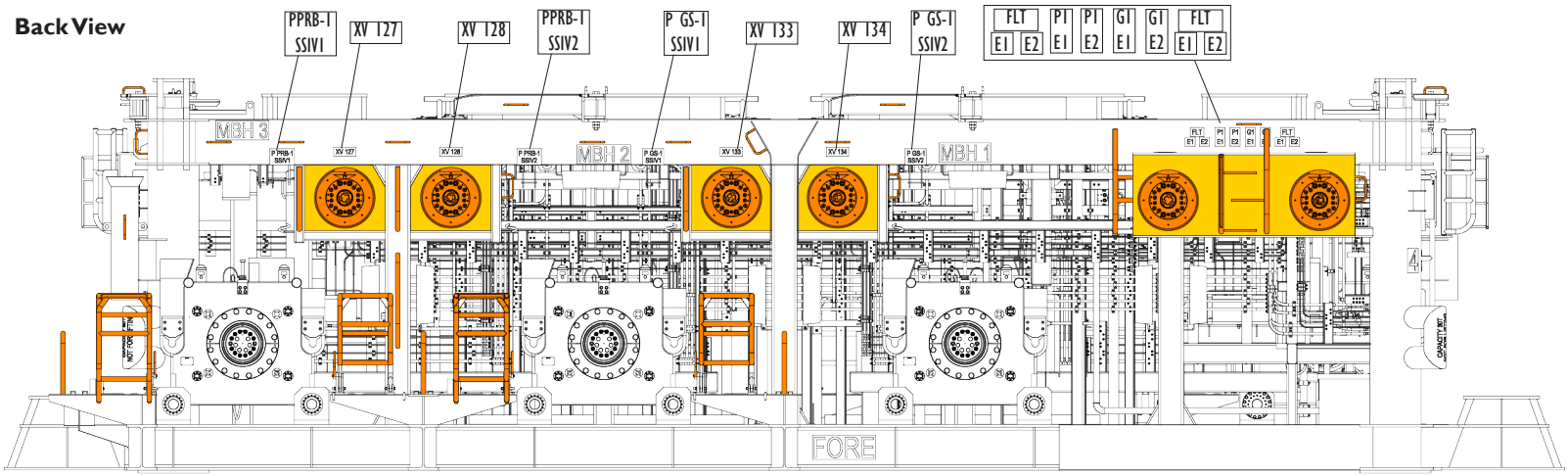

Right View

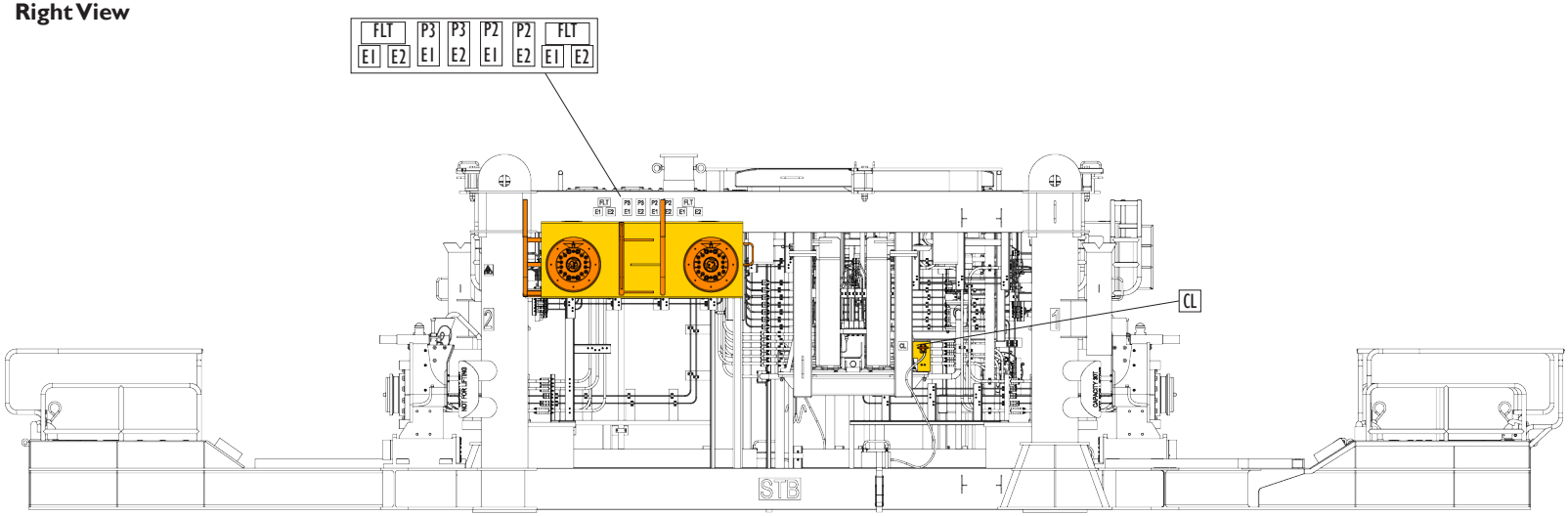

Left View

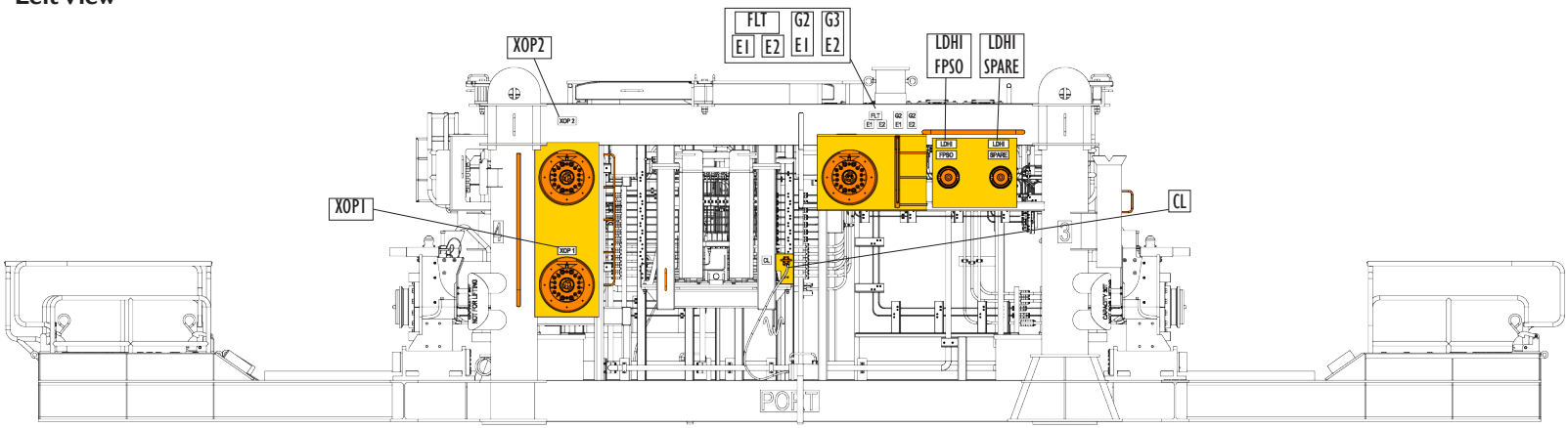

12.10 SDH Data Table

SDH specifications			
General			
Design life	40 years		
Support type	Foundation with mud mat and skirts		
Design water depth	300 m		
Temperature rating max/min	60 °C/-29 °C		
Dimensions and weights			
Dimensions	Length [mm]	Width [mm]	Height [mm]
Combined structure outer extremes	18455	16370	8020
Module main structure outline	12350	6250	3465
Foundation main structure outline	17100	12300	1300
Load-out Weight, combined structure	268 mT		
Installation Weight in air, combined structure	311 mT		
In-place Weight, combined structure	255 mT		

Limitations	
Description	Data
SDH installation specific	
Sea state for installation	See Installation Contractors installation procedure. No slack Slings allowed. DAF of 1.5 for lift in air and DAF of 2.0 for lift through splash zone and submerged lift have been used as design premise for the SDH.
Maximum landing velocity	0.5 m/s
Tugger bollard capacity	30 mT
Exceeding the specified Tugger Bollard capacity may cause damage to the SDH Structure. It is recommended to use a Weak Link on the Tugger Wire.	

Interfaces	
Description	Interface/Tool/Equipment
Installation equipment	Spreader Bar w/Slings, ref. /4/.
Release of lifting equipment	WROV
Make-up of Electrical and Optical Flying Lead	WROV
Make-up of Steel Tube Flying Lead	FLOT/WROV
Operation of roof hatches	WROV/ROV hook
Operation of 2 1/16" ROV operated gate valves	Torque Tool ISO 13628-8 Class 2, ref Valve IOM in appendix B

Interfaces, continued	
Operation of ¾" ROV operated gate valves	Torque Tool ISO 13628-8 Class 2, ref Valve IOM in appendix D
Operation of ½" Ball valves	Torque Tool ISO 13628-8 Fig 13 Type A ROV Receptacle.
Replacement of SCM	RCR with appurtenant Tools/Interfaces.
Operation of HCCS/UTAs	HCCS Tool Package
Retrieval / re-installation of shuttle valve units	WROV
Indicators	
¾" Gate Valves	X – O (Closed - Open)
2 1/16" Gate Valves	X – O (Closed - Open)
½" Ball Valves	X – O (Closed - Open)
Roof Hatch	L – U (Locked – Unlocked)
Roof Hatch Hinge Lock (for Hatch retrieval)	L – U (Locked – Unlocked)
STFL Parking Pedestal Receptacle	L – U (Locked – Unlocked)
Foundation Penetration Marks	50 – 1150 mm scale
Bulls-eye	1-5 degree Scale

13 SDU System

13.1 SDU Scope of Supply

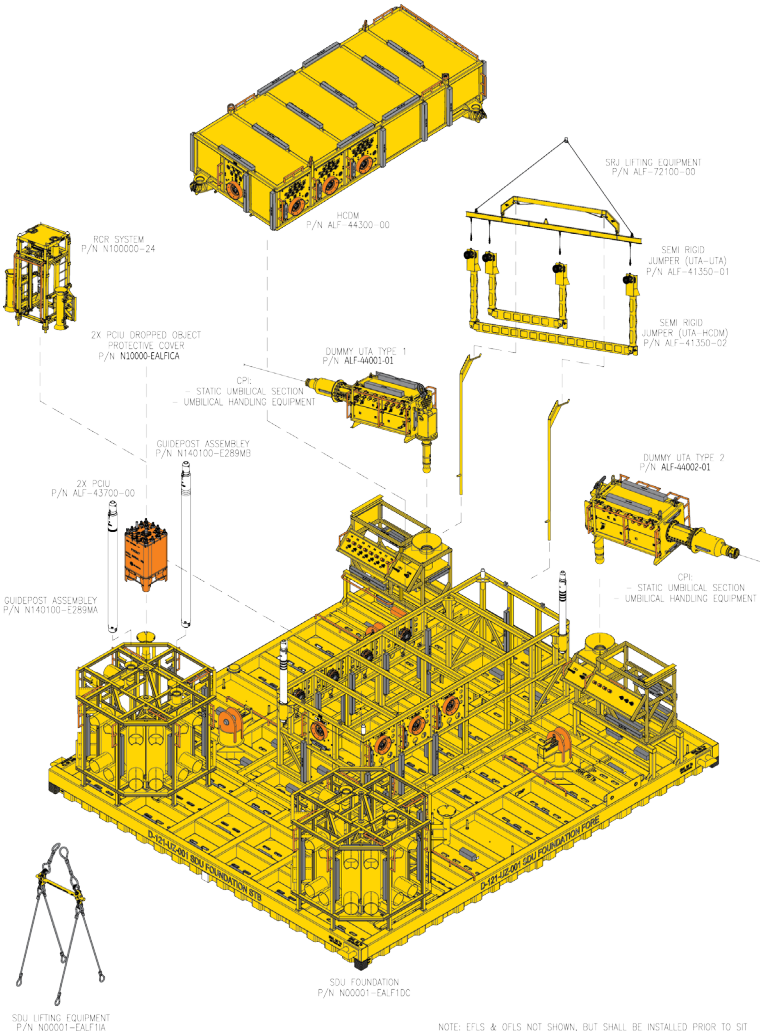

13.2 SDU, General Arrangement

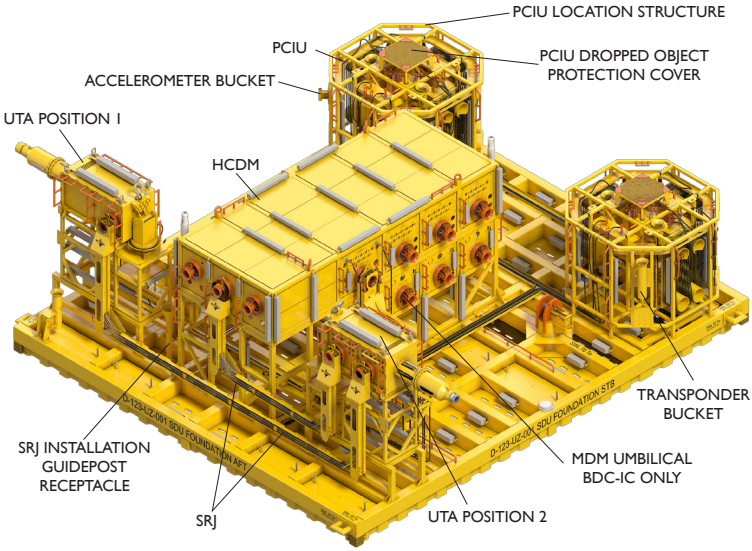

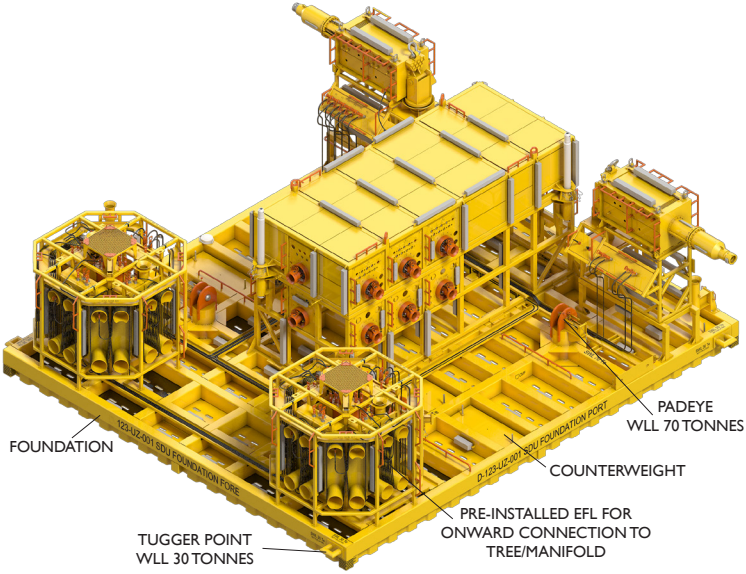

13.3 SDU, Data Tables

SDU Ident	GE Part No.	Found. Structure (Qty)	HCDM (Qty)	PCIU (Qty)	UTA (Qty)	SRJ UTA-HCDM (Qty)	SRJ UTA-UTA (Qty)	EFL (Qty)	OFL (Qty)
BDC 1A	ALF-40000-01	1	1	2	2	1	1	16	6
BDC 1B	ALF-40000-02	1	1	2	1	1	-	14	4
BDC 1C	ALF-40000-03	1	1	2	2	1	1	18	6
BDC 1D	ALF-40000-04	1	-	-	2	-	1	2	2
BDC4	ALF-40000-05	1	1	2	1	1	-	14	4
BDC5	ALF-40000-06	1	1	2	1	1	-	14	4

SDU and HCDM General Specifications	
	SDU
Design Life	40 years
Support Type	Foundation with Mudmat and Skirt
Design Water Depth	300 m
Storage Temperature max/min	50 °C / -18 °C
Operating Temperature max/min	40 °C / -5 °C
Max Dimensions, L x W x H	15800 mm x 13800 mm x 5563 mm
Load-out Weight	215 mT
Installation Weight (in air)	226 mT
In-place Weight (submerged)	204 mT

Interface/Tool/Equipment	
Installation Equipment	Spreader Bar w/Slings
Release of Lifting Equipment	WROV
Make-up of Electrical and Optical Flying Lead	WROV
Make-up of Steel Tube Flying Lead	WROV w/FLX360 ROV Tool
Make-up of LTPC	WROV w/FLX360 ROV Tool
Operation of PCIU Cover	WROV
Operation of Ball Valves	WROV
Replacement of HCDM	Lifting Slings P/N UE2811, Guideposts P/N N140400-3100, N140400-2500
Operation of UTA's	WROV
Retrieval and Reinstallation of PCIU	RCR Tool/Guideposts/Walking Stick/WROV
Installation and Retrieval of SRJ	SRJ Installation Spreader Bar WROV/FLX360 ROV Tool
½" Ball Valve Indicator	S – O (Shut - Open)
1" Ball Valve Indicator	S – O (Shut - Open)
Protective Cover	L – U (Locked - Unlocked)

13.4 SDU, Electric Schematic-1

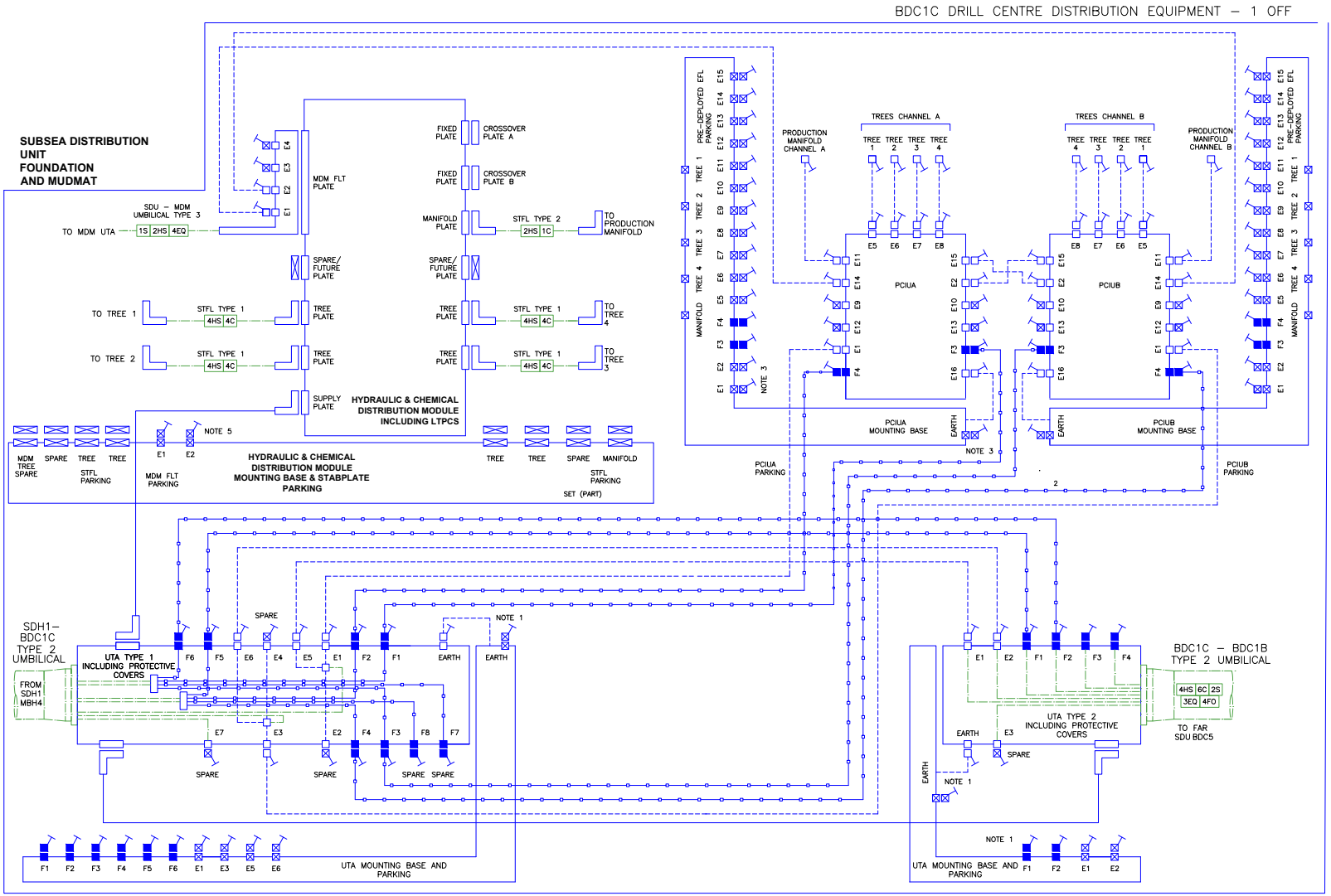

13.5 SDU, Electric Schematic-2

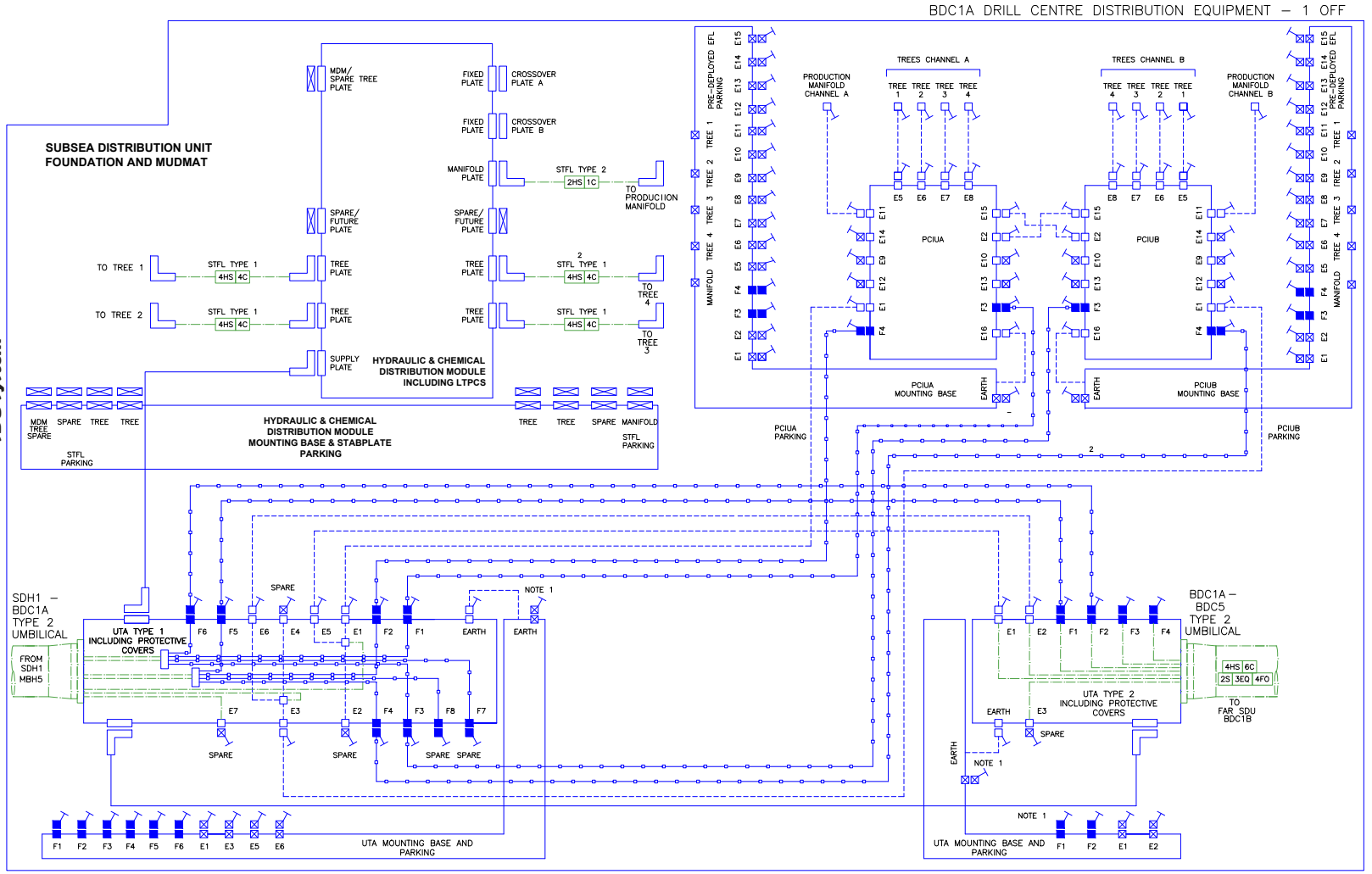

13.6 SDU, Electric Schematic-3

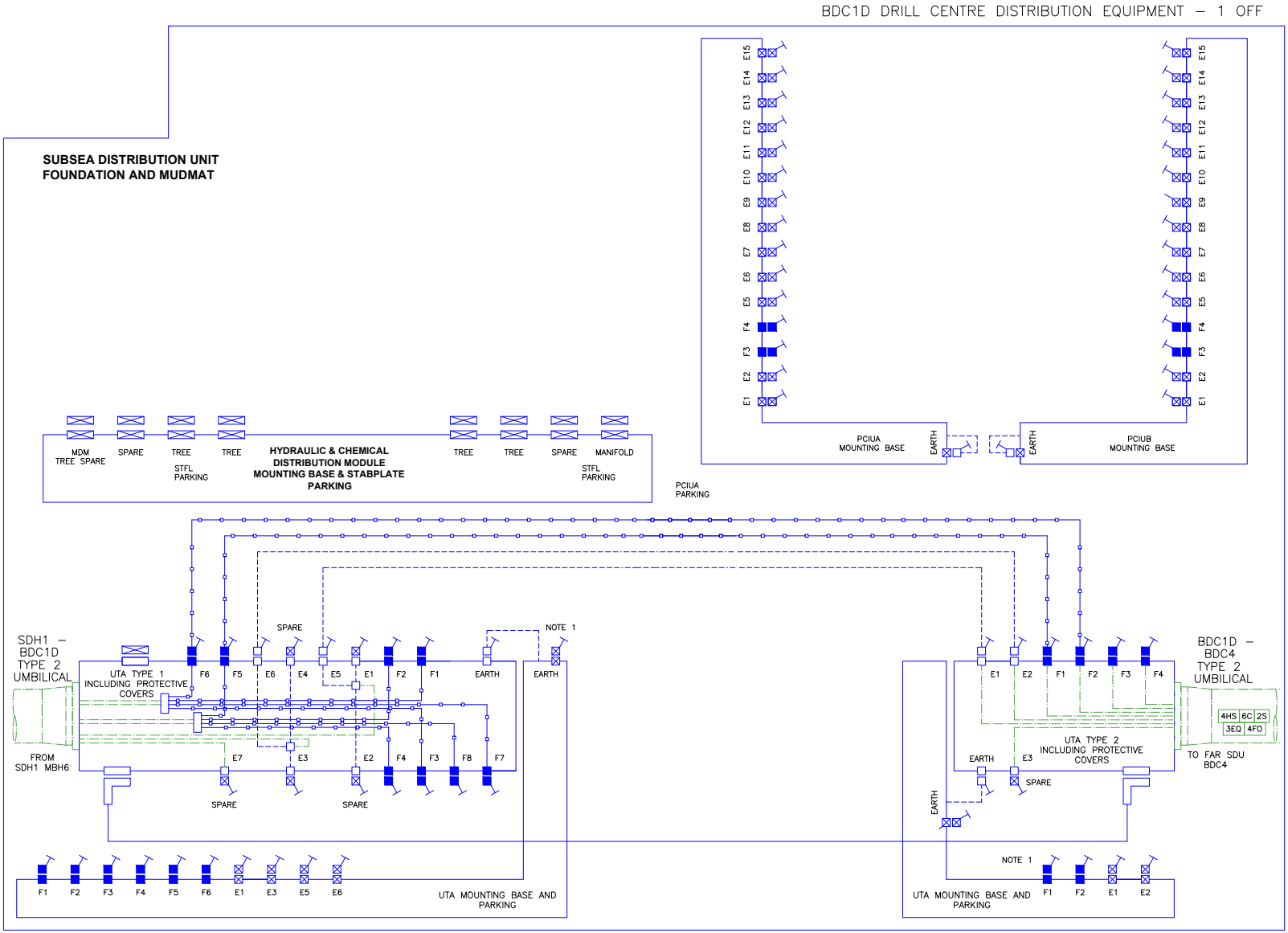

13.7 SDU, Electric Schematic-4

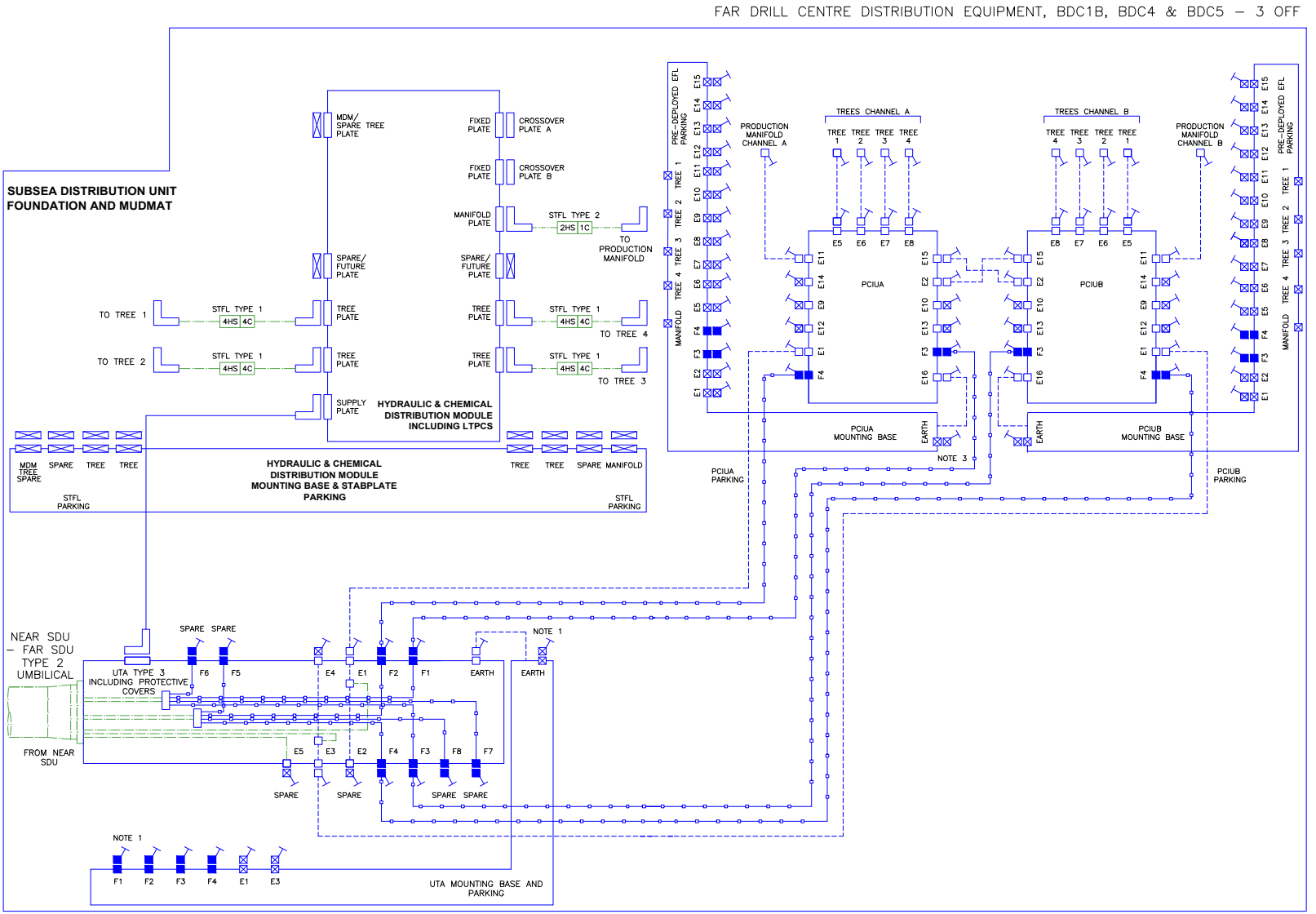

13.8 SDU, Electrical and Optical-1

NOTES:

1) UTA 1 Q1 TO Q3 ELECTRICAL CONNECTIONS ARE AS FOLLOWS:

WIRE	Q1 CONN/PIN	Q2 CONN/PIN	Q3 CONN/PIN
1	E1/1 & E2/1	E3/1 & E4/1	E7/1
2	E1/2 & E2/2	E3/2 & E4/2	E7/2
3	E5/1	E6/1	E7/3
4	E5/2	E6/2	E7/4

2) UTA 1 FO1 TO FO4 FIBRE CONNECTIONS ARE AS FOLLOWS:

FIBRE	FO1 CONN/PIN	FO2 CONN/PIN	FO3 CONN/PIN	FO4 CONN/PIN
1	F1/1	F2/1	F5/1	F6/1
2	F1/5	F2/5	F5/2	F6/2
3	F3/1	F4/1	F5/3	F6/3
4	F3/5	F4/5	F5/4	F6/4
5	F7/1	F8/1	F5/5	F6/5
6	F7/3	F8/3	F5/6	F6/6
7	F7/5	F8/5	F5/7	F6/7
8	F7/7	F8/7	F5/8	F6/8

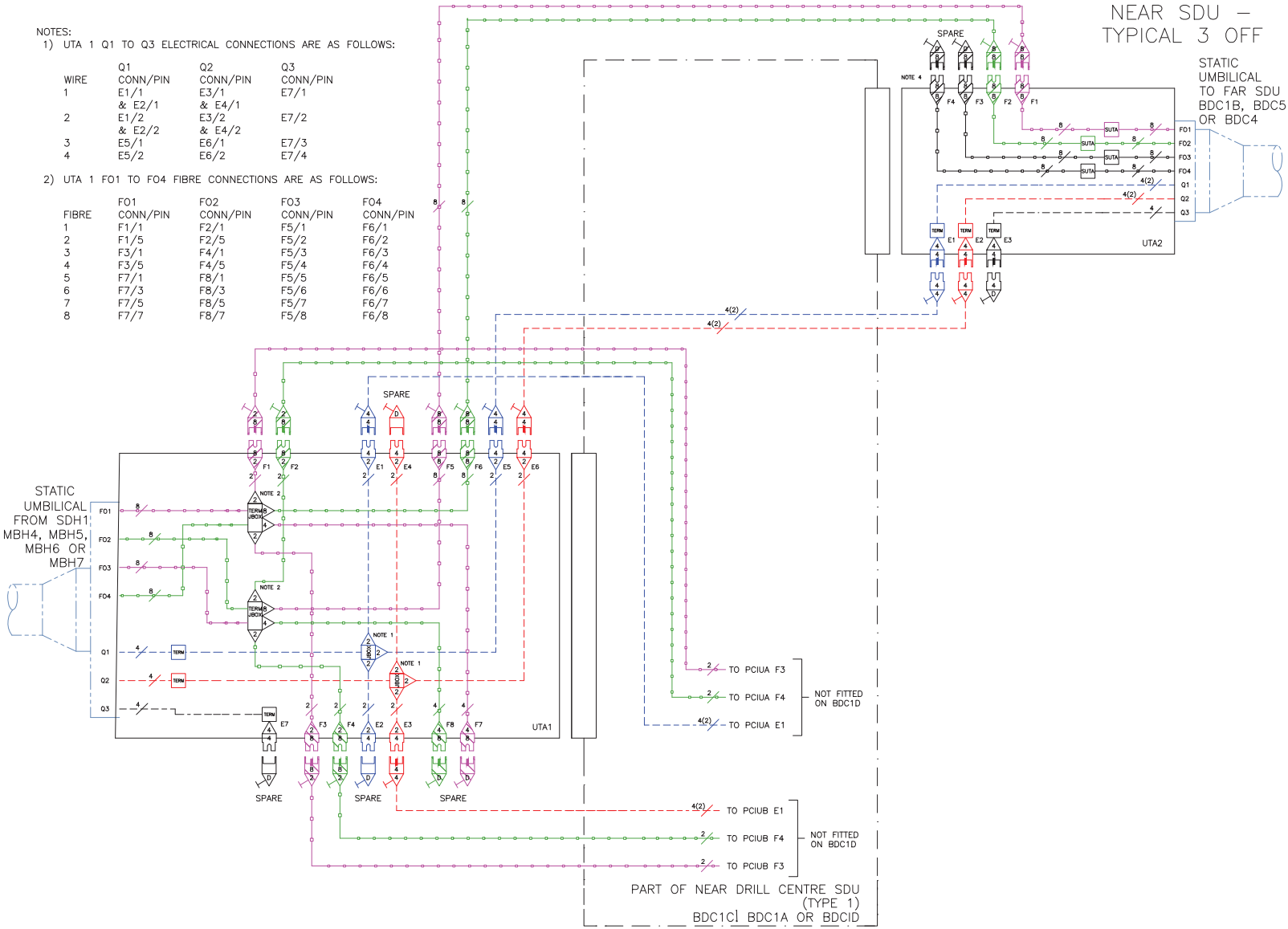

13.9 SDU, Electrical and Optical-2

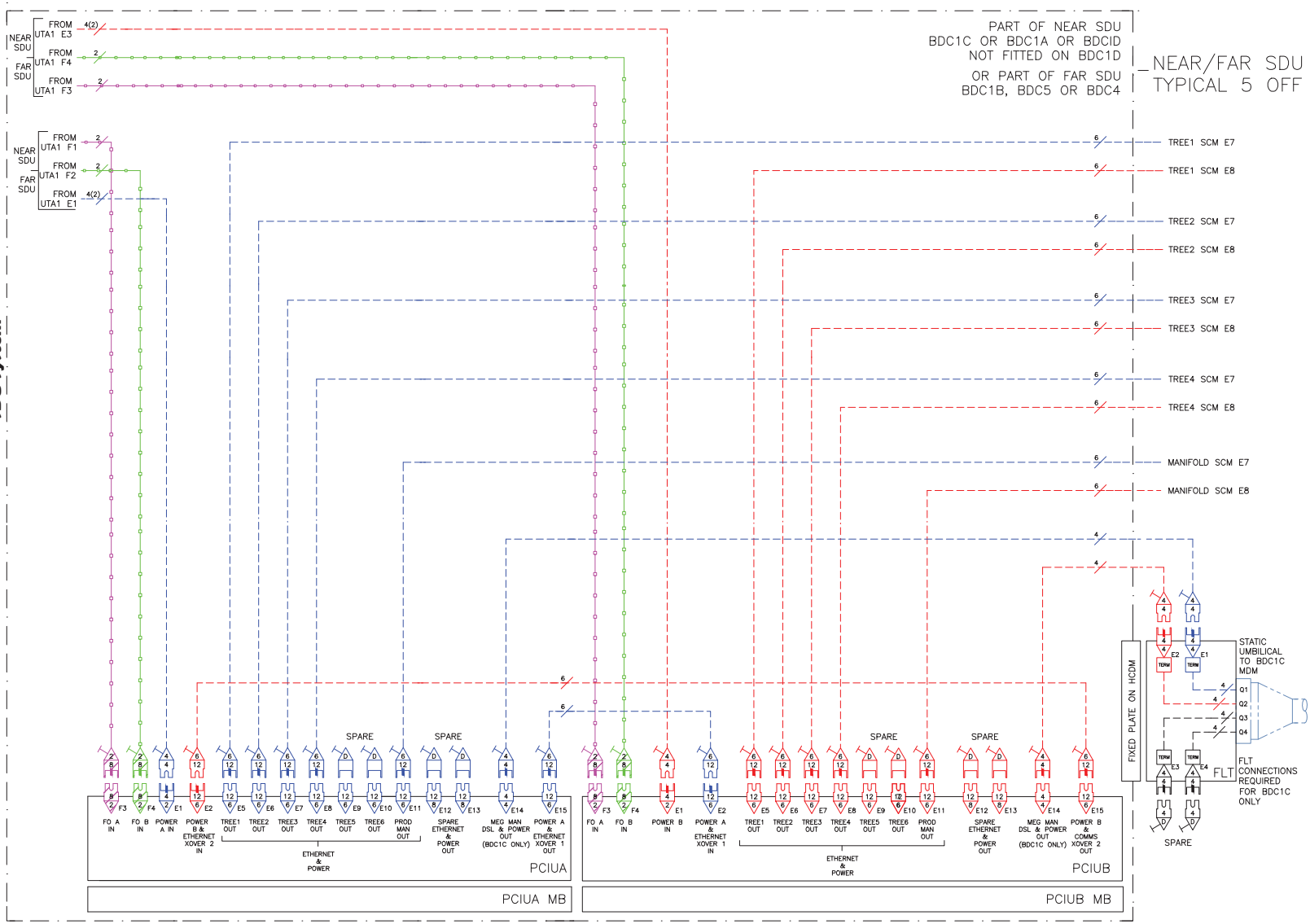

13.10 SDU, Electrical and Optical-3

NOTES:

1) UTA TYPE 3 Q1 TO Q3 ELECTRICAL CONNECTIONS ARE AS FOLLOWS

WIRE	Q1 CONN/PIN	Q2 CONN/PIN	Q3 CONN/PIN
1	E1/1 & E2/1	E3/1 & E4/1	E5/1
2	E1/2 & E2/2	E3/2 & E4/2	E5/2
3	E2/3	E4/3	E5/3
4	E2/4	E4/4	E5/4

2) UTA TYPE 3 FO1 TO FO4 FIBRE CONNECTIONS ARE AS FOLLOWS:

FIBRE	FO1 CONN/PIN	FO2 CONN/PIN	FO3 CONN/PIN	FO4 CONN/PIN
1	F1/1	F2/1	F5/1	F6/1
2	F1/5	F2/5	F5/2	F6/2
3	F3/1	F4/1	F5/3	F6/3
4	F3/5	F4/5	F5/4	F6/4
5	F7/1	F8/1	F5/5	F6/5
6	F7/3	F8/3	F5/6	F6/6
7	F7/5	F8/5	F5/7	F6/7
8	F7/7	F8/7	F5/8	F6/8

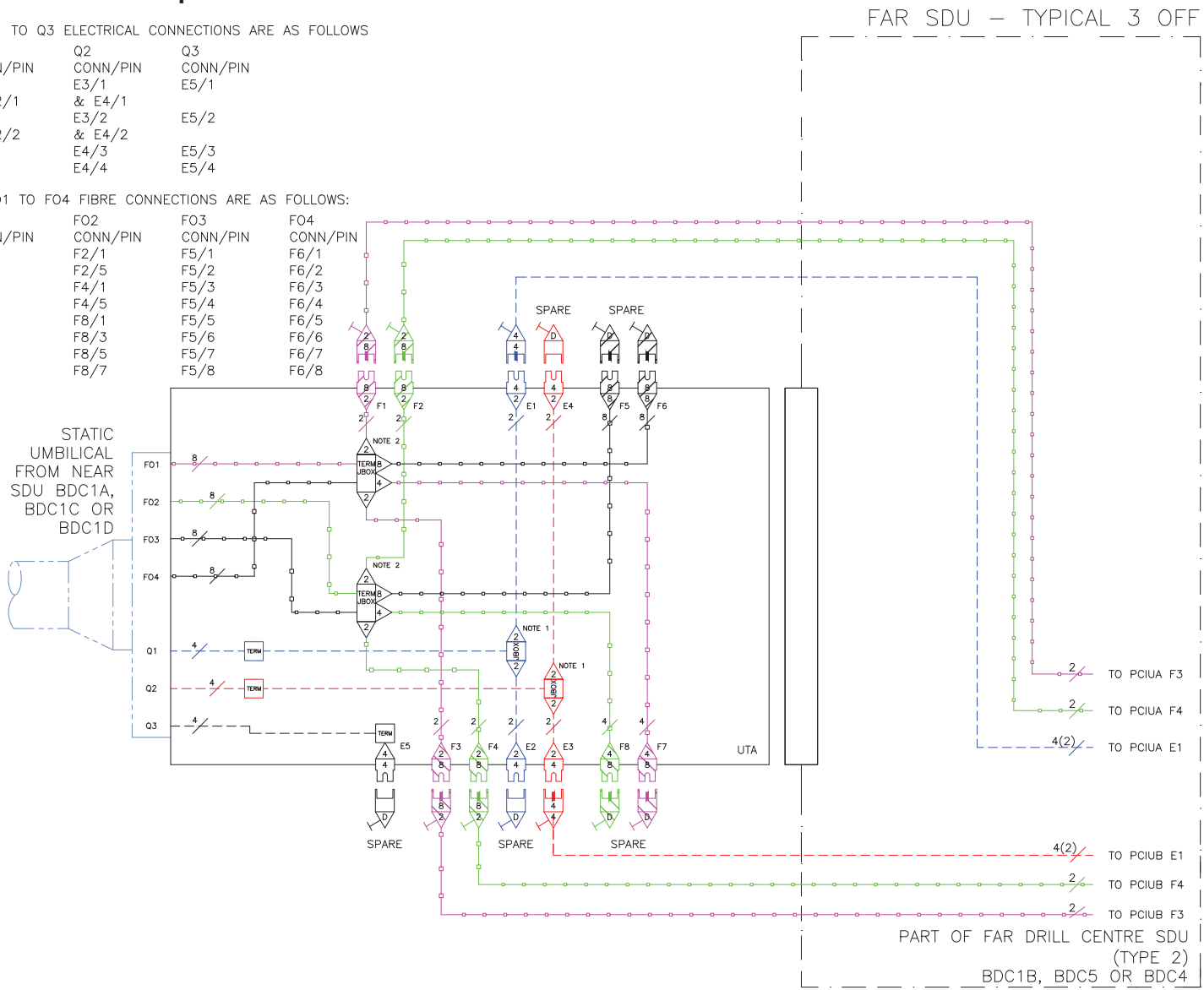

13.11 SDU, Hydraulic and Chemical-1

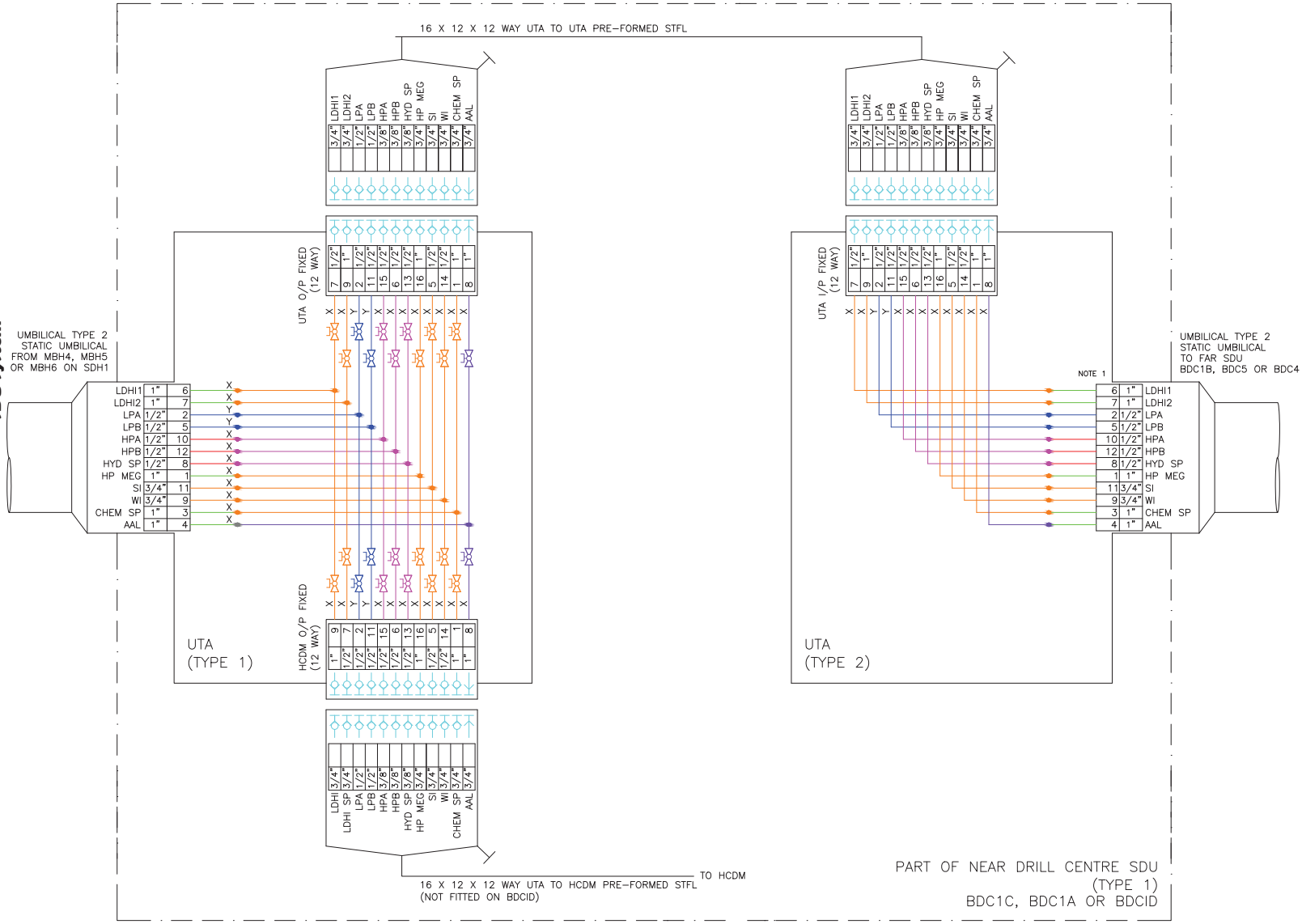

13.12 SDU, Hydraulic and Chemical-2

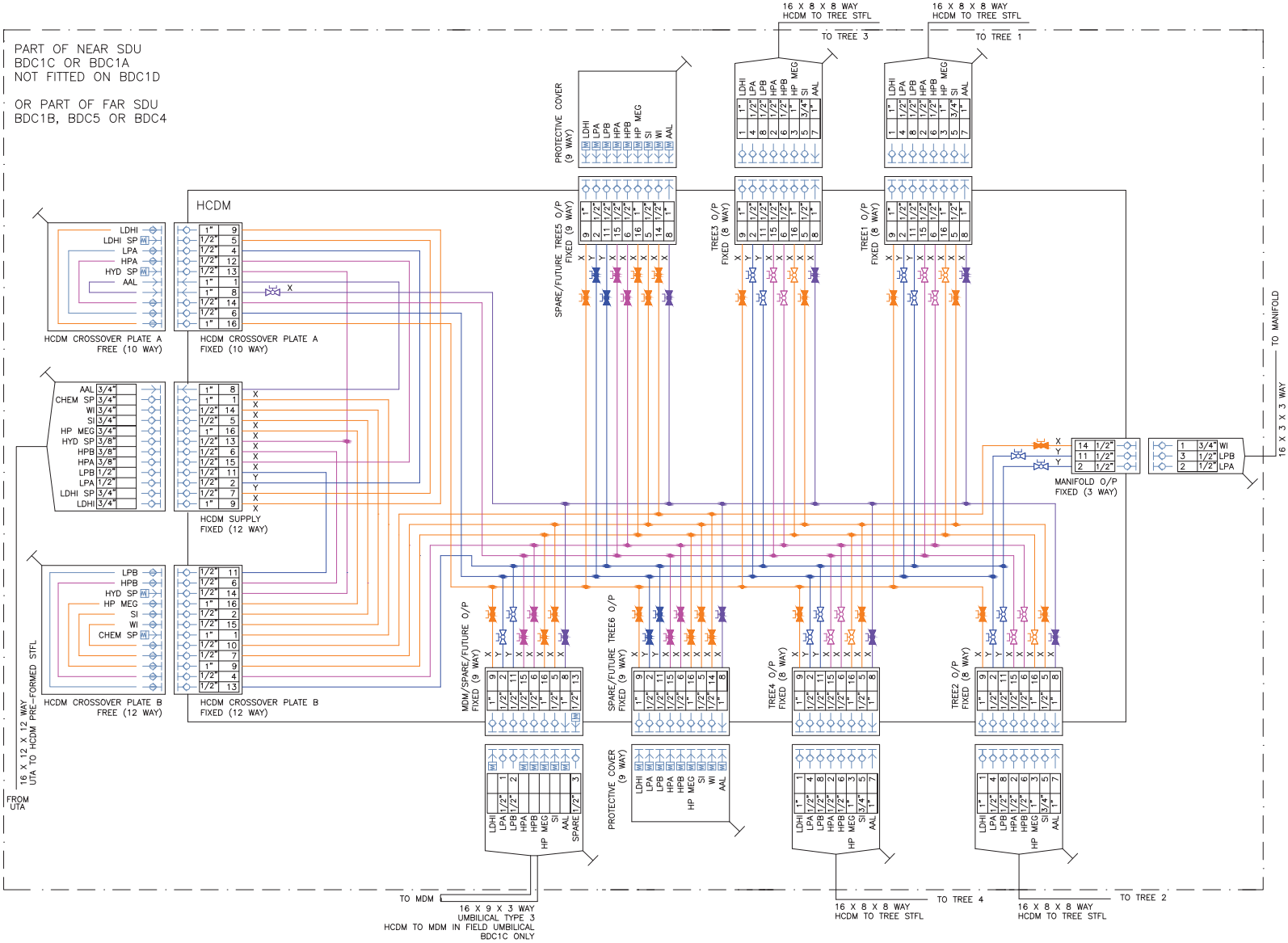

13.13 SDU, Hydraulic and Chemical-3

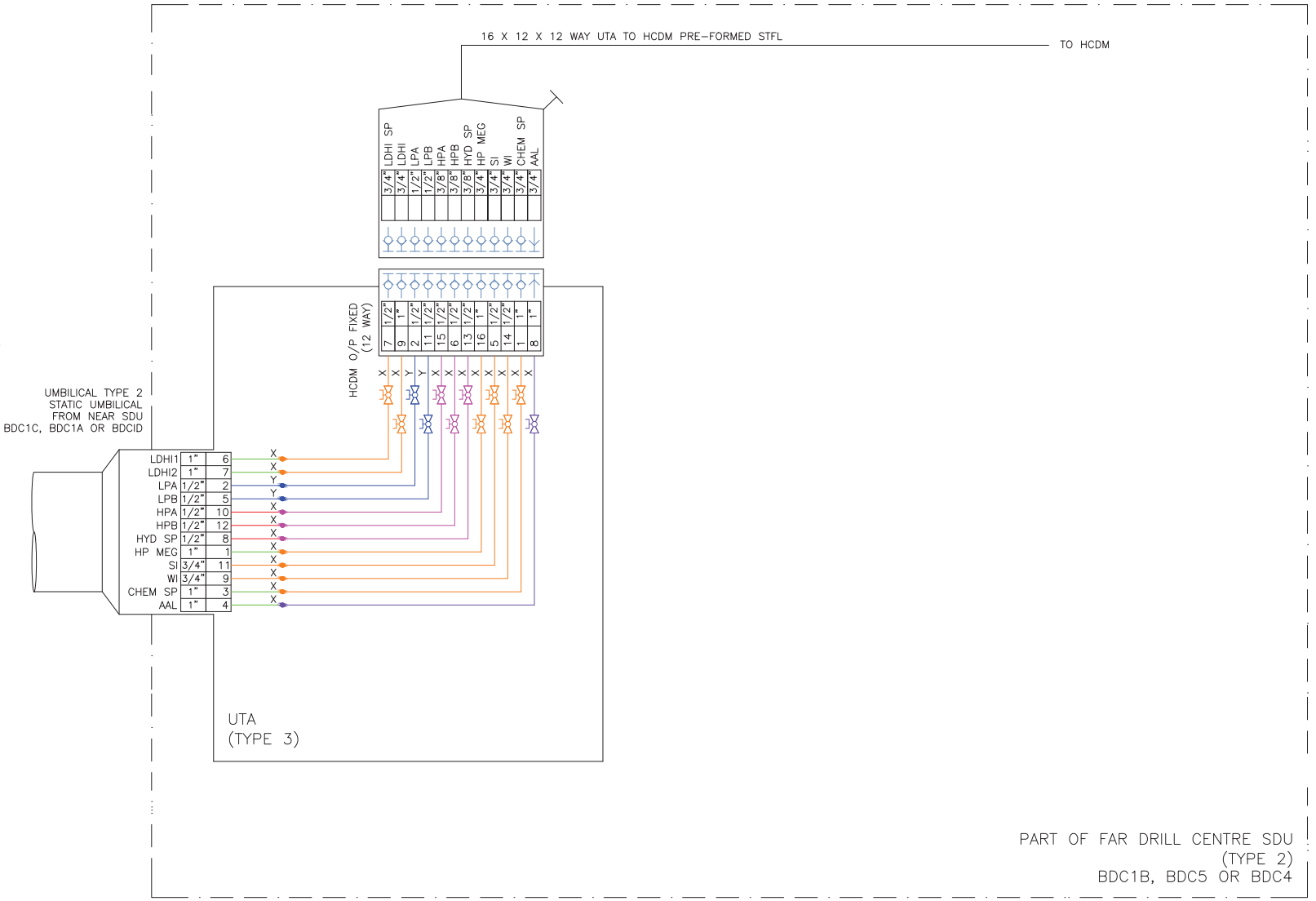

13.14 UTA, General Arrangement

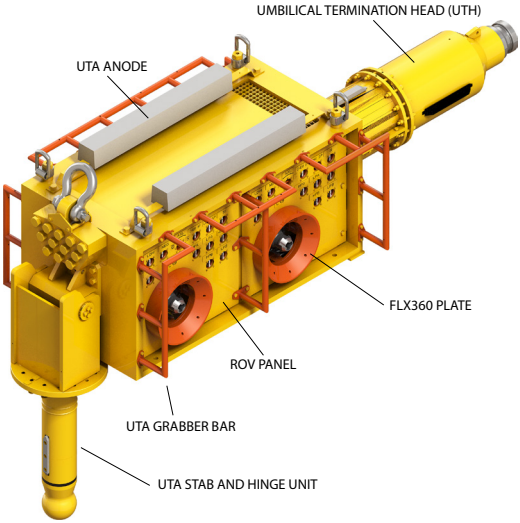

13.15 UTA, ROV Interfaces

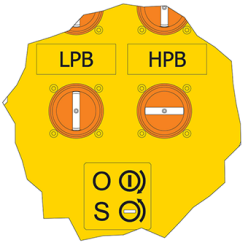

OPERATING POSITION FOR STANDARD 1/4 TURN VALVES
"LPB" VALVE SHOWN IN OPEN POSITION
"HPB" VALVE SHOWN IN SHUT POSITION

DETAIL VIEW AA
SHOWING CABLE
(STAUFF) CLAMPS
TYP IN 4 POSN'S

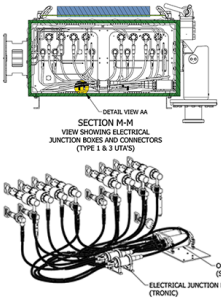

SECTION M-M
VIEW SHOWING ELECTRICAL
JUNCTION BOXES AND CONNECTORS
(TYPE 1 & 3 UTA'S)

ISOMETRIC VIEW SHOWING TYPICAL
OPTICAL & ELECTRICAL CABLING FROM JUNCTION BOXES
TO CONNECTORS

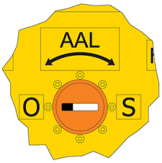

AAL VALVE POSITIONS
SHOWN OPEN

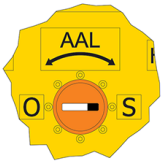

AAL VALVE
SHOWN SHUT
180° OPERATION
(OPEN TO SHUT)

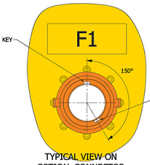

TYPICAL VIEW ON
OPTICAL CONNECTOR
SHOWING KEY LOCATIONS

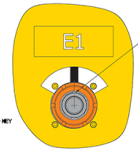

TYPICAL VIEW ON
ELECTRICAL CONNECTOR
SHOWING KEY LOCATIONS

VIEW ON CP CONNECTOR

13.16 UTA, Data Table

Data		
UTA pressure Rating (Max Working Pressure)	LP and LP Spare HP and HP Spare HP MEG WI SI LDHI Chem. Spare AAL	345 bar (5000 psi) 690 bar (10000 psi) 690 bar (10000 psi) 690 bar (10000 psi) 690 bar (10000 psi) 690 bar (10000 psi) 690 bar (10000 psi) 690 bar (10000 psi)
Size and Weight (UTA)	Height: 2982 mm (including Stab) Lenght: 4045 mm (including Grabber Bars) Estimated mass in air: 6570 kg (Type 4 UTA) to 7250 kg (Type 1 UTA) Estimated Mass in Water: 5100 kg (Type 4) to 6290 kg (Type 1)	
Size and Weight	Heiht: 2406 mm Lenght: 3226 mm Width: 1664 mm Mass in air: 3675 kg Mass in Water: 3025 kg	
Design Depth	300 m	
Design Life	40 years subsea (30 years for Tronic Connectors and Seacon Optical Connector System)	
Design Temperature	-5 °C to +40 °C	

Torque Values		
Valve	Operating Torque	Maximum
1/4 Turn Valve	68 Nm	170 Nm
AAL Gate Valve	163 Nm	271 Nm

13.17 HCDM General Assembly

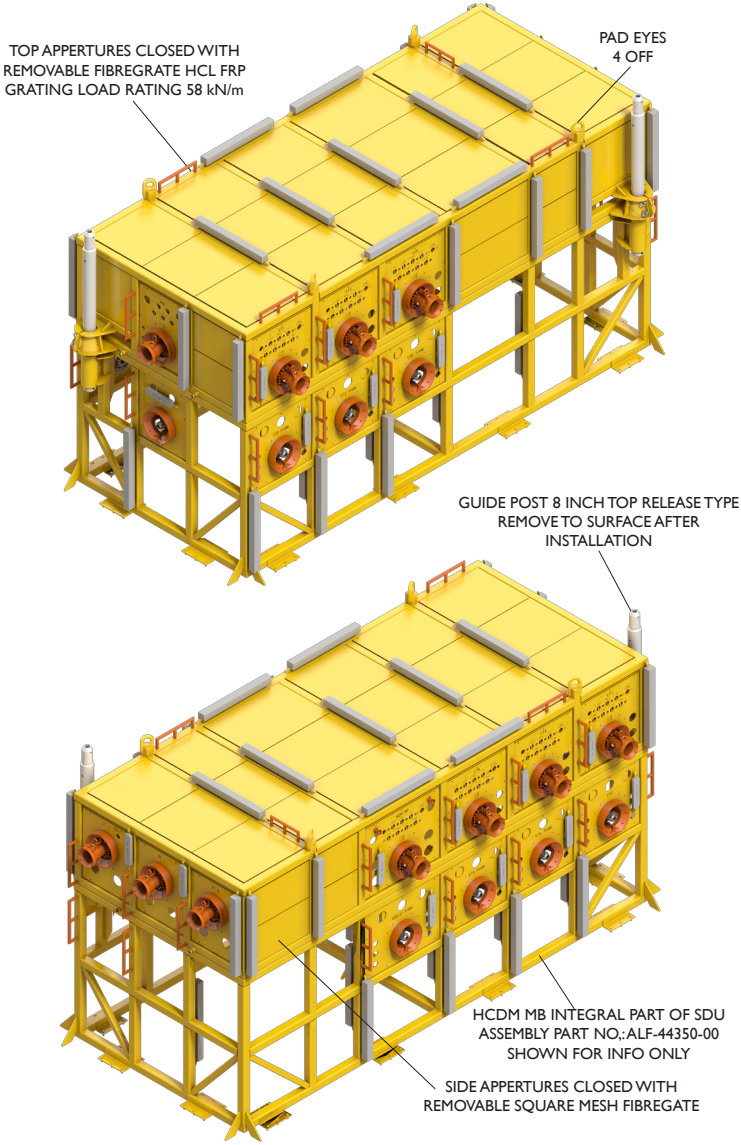

13.18 HCDM ROV Panels

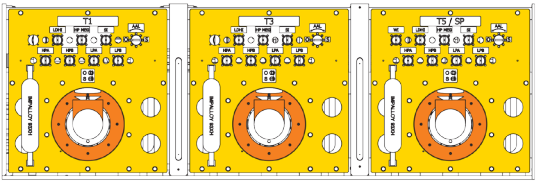

PANELS ON SIDE "D"

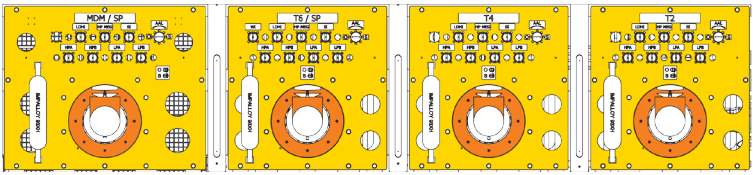

PANELS ON SIDE "B"

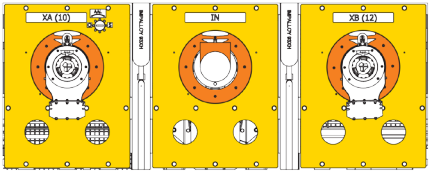

PANELS ON SIDE "C"

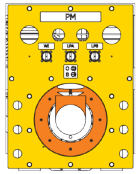

PANEL ON SIDE "A"

13.19 Data Table

Valve Function	LP Hydraulic.	HP Hydraulic	CI Lines	WI Lines	Annulus Access
Valve Identification	LPA LPB	HPA HPB HYD SP	SI LDHI LDHI SP HP MEG Chem SP	WI	AAL
Valve part No.	TA5368-36	TA5368-35	TA5368-37	TA5368-52	TA4532-6
Valve Type	Ball	Ball	Ball	Ball	Ball
Bore Size	1/2"	1/2"	1/2"	1/2"	1/2"
Stem Travel	1/4 turn (90°)	1/4 turn (90°)	1/4 turn (90°)	1/4 turn (90°)	1/2 turn (90°)
Nominal Torque (Nm/ft-lbf)	68/60	68/60	68/60	68/60	163/120
Max Torque (Nm/ft-lbf)	170/125	170/125	170/125	170/125	271/200
Max Axial Load (N/lbf)	5000/1125	5000/1125	5000/1125	5000/1125	5000/1125
Max Bending Moment (Nm/ft-lbf)	1000/738	1000/738	1000/738	1000/738	1000/738

General				
Design Life	40 years			
Support Type	HCDM MB fixed to SDU Foundation with Mudmat and Skirt			
Design Water Depth	300 m			
Storage Temperature Max/Min	50 °C/-18 °C			
Operating Temperature Max/Minl	40 °C/-10 °C			
HCDM Maximum Dimensions	Length: 10088 mm Width: 4818 mm Height: 2116 mm			
Load-out Weight	21 mT			
Installation Weight	26 mT			
Piping Design Code	ISO 13628-6 and ASME B31.3			
Piping/Tubing Data	OD x WT (in x in)	MWP (MPa/psi)	DP (MPA/psi)	PTP (MPa/psi)
Chemical Injection Lines (HP MEG, LDHI, SI wi)	3/4" x 0.156"	69.0/10000	75.9/11000	113.85/16500
Hydraulic System - Low Pressure (LP)	1/2" x 0.083"	34.5/5000	38.0/5500	56.925/8250
Hydraulic System Low Pressure (LP)	3/8" x 0.065"	69.0/10000	75.9/11000	113.85/16500
Annulus Access line (AAL)	1.315" x 0.25"	69.0/10000	75.9/11000	113.85/16500

13.20 PCIU, General Arrangement

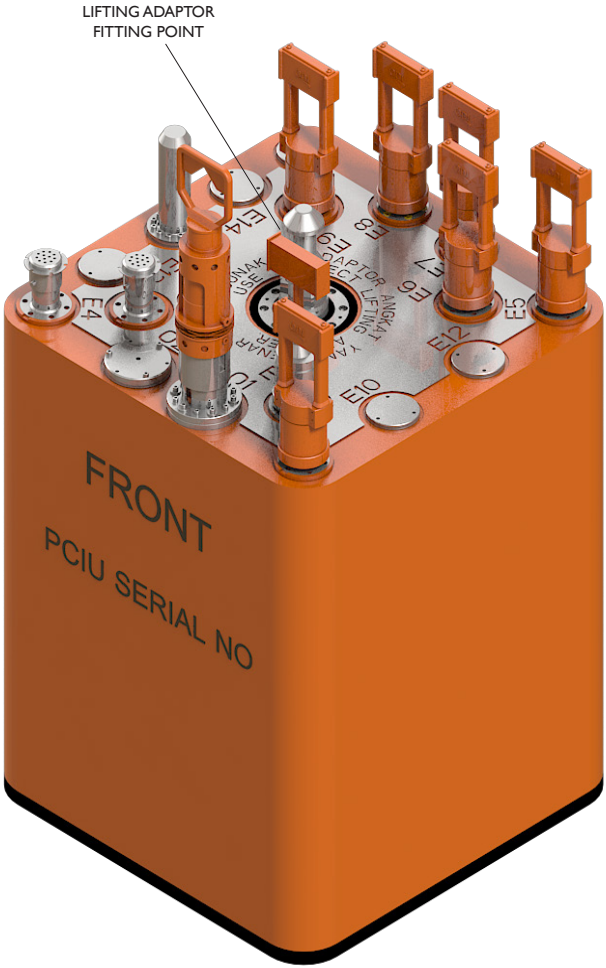

13.21 PCIU, Data Table

DATA			
Position	Description	Type	Brand
E1	Power in	4 way Pins	Tronic
E2	Power/Ethernet Communications Crossover in	12 way Pins	Tronic
E3	Fibre-optics A in	8 way	Seacon
E4	Fibre-optics B in	8 way	Seacon
E5	Power/Ethernet Communications Tree out	12 way Socket	Tronic
E6	Power/Ethernet Communications Tree out	12 way Socket	Tronic
E7	Power/Ethernet Communications Tree out	12 way Socket	Tronic
E8	Power/Ethernet Communications Tree out	12 way Socket	Tronic
E9	Power/Long Distance Ethernet Communications Tree out	12 way Socket	Tronic
E10	Power/Long Distance Ethernet Communications Tree out	12 way Socket	Tronic
E11	Power/Ethernet Communications Production Manifold Tree out	12 way Socket	Tronic
E12	Power/Long Distance Ethernet Communications Spare 1 out	12 way Socket	Tronic
E13	Power/Long Distance Ethernet Communications Spare 2 out	12 way Socket	Tronic
E14	Power/DSL Communications MEG Distribution Manifold out	4 way Socket	Tronic
E15	Power/Ethernet Communications Crossocver out	12 way Socket	Tronic
E16	Earth Connector	4 way Socket	Tronic
General			
Design temperature	-18 °C to +50 °C (Storage) -5 °C to + 40 °C (Operating)		
Height	1551 mm (excl. Protective Caps) 1771 mm (Incl. Protective Caps)		
Length x Depth	770 mm x 770 mm		
Weight	1631 kg (In air) 1027 kg (In Seawater)		
Dielectric Fluid	Castrol, Type IEC 60296:2012, 409 litres		
Lifting Mandrel	SWL: 2 tonnes, Interface: ISO 13628-8 Size A		

13.22 Semi Rigid Jumper (SRJ), General Arrangement

The Semi Rigid Jumper (SRJ) is a jumper system that provides the hydraulic connection from the incoming UTA to the HCDM and/or the outgoing UTA. There are two types of SRJ:

- UTA-HCDM SRJ (short)
- UTA-UTA SRJ (long)

The SRJs are connected via the FLX360 MQC plate system. Flying plates are fitted to the SRJ, which are connected to the fixed plates on the UTA / HCDM.

13.23 SRJ, Data Table

TECHNICAL DATA	
Design temperature	-18 °C to +50 °C (Storage) -5 °C to + 40 °C (Operating)
Weight, SRJ Long	1500 kg (In air) 1250 kg (In Seawater)
Weight, SRJ Long	1000 kg (In air) 850 kg (In Seawater)
Maximum Design Pressure, HP and Chemical Lines	69 MPa
Maximum Design Pressure, LP Lines	34.5 MPa

14 SPS Topside Equipment

14.1 Subsea Production Control System - Topside Equipment - 1

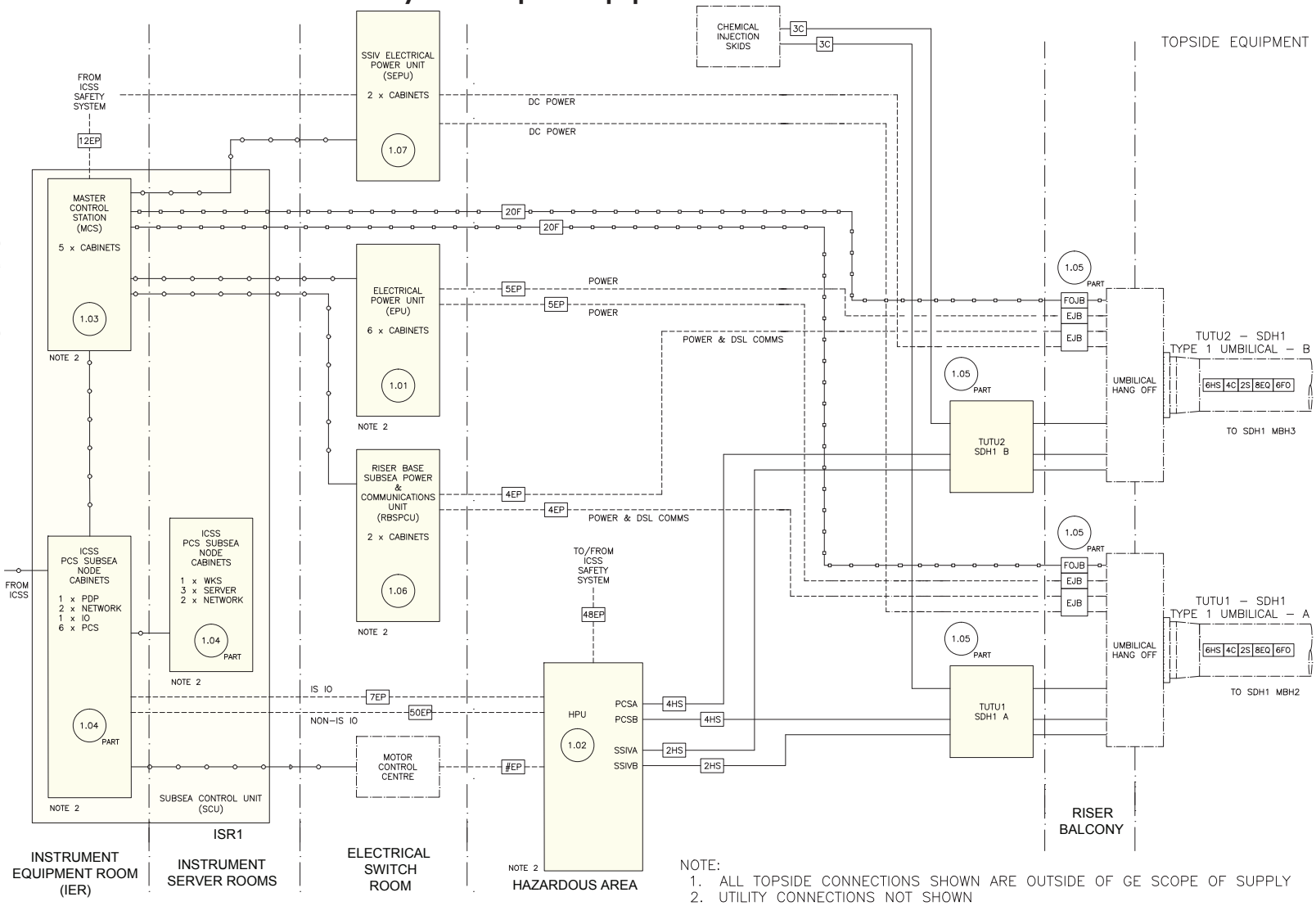

14.2 Subsea Production Control System - Topside Equipment-2

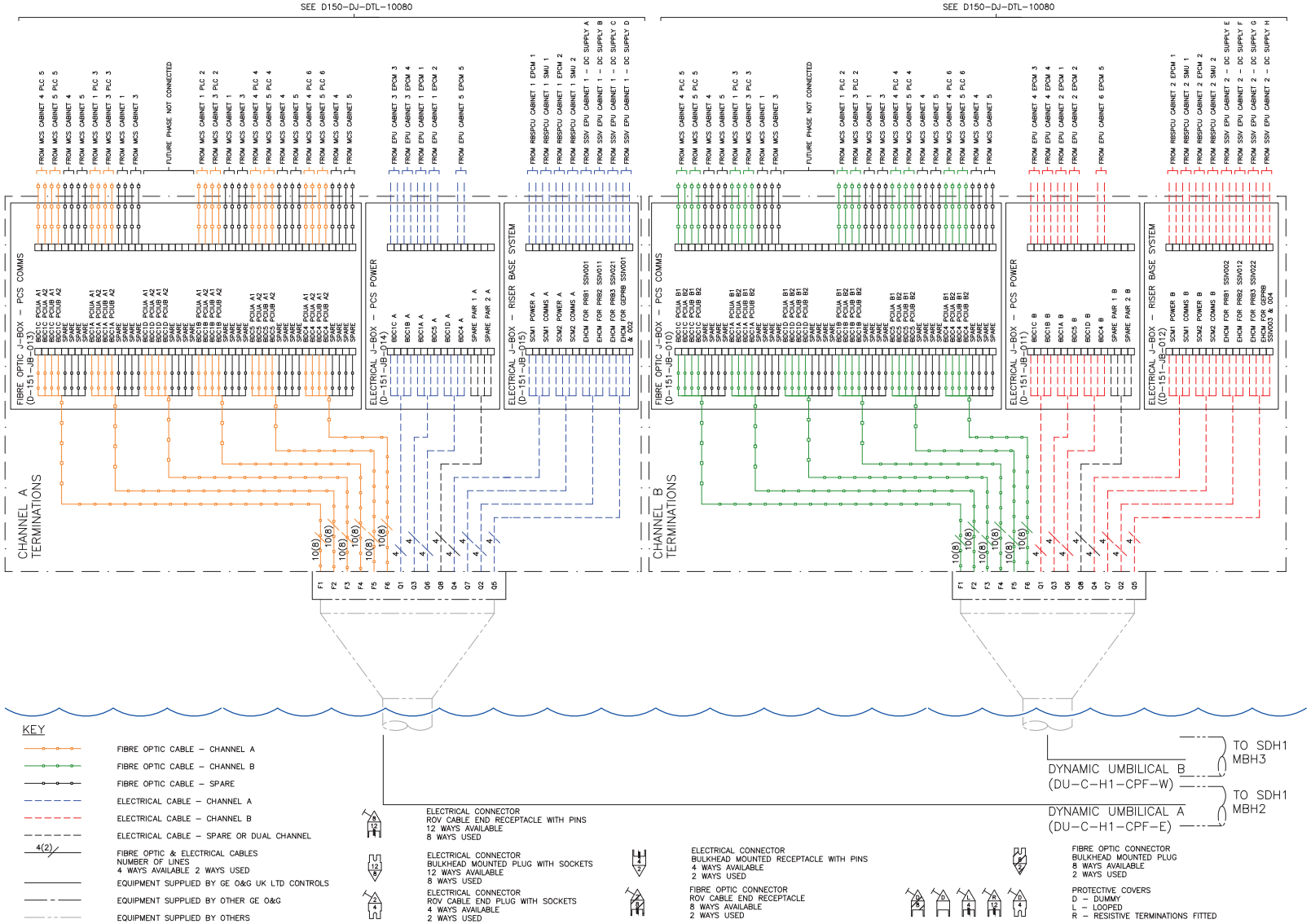

14.3 Master Control Station

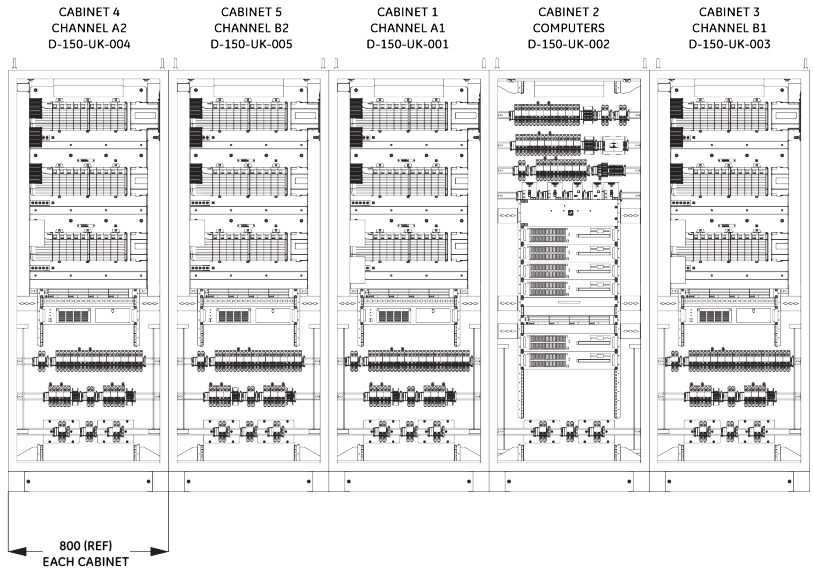

14.4 Electronic Power Unit (EPU)

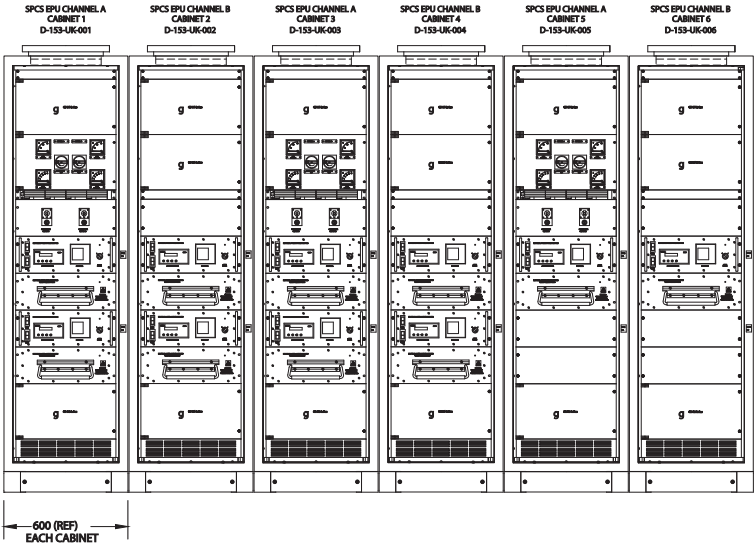

14.5 SSIV Electrical Power Unit (SEPU)

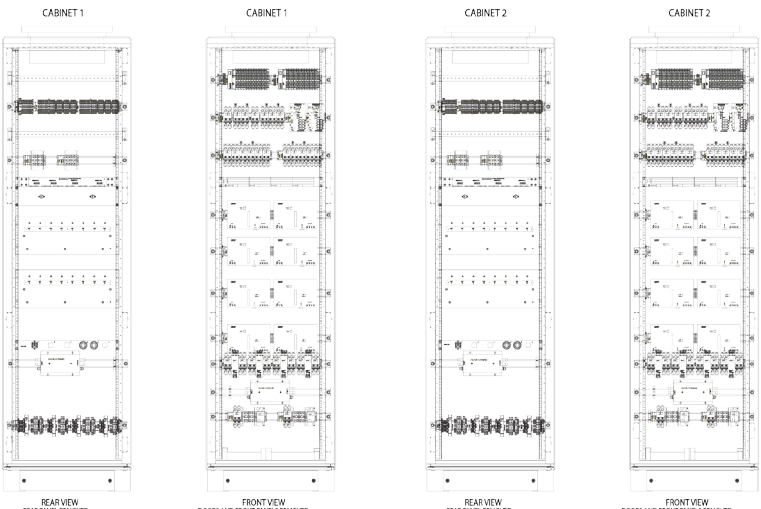

14.6 Hydraulic Power Unit (HPU)

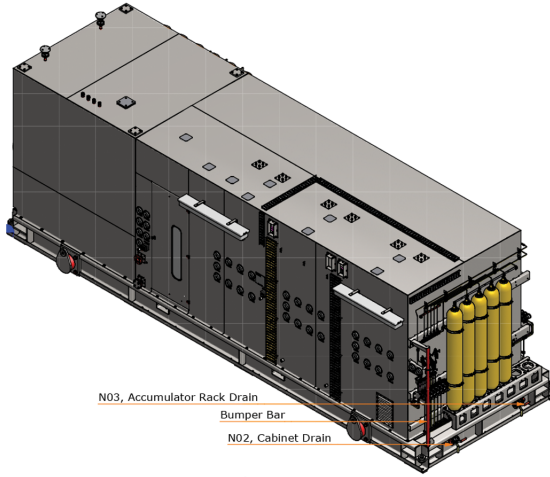

Back View

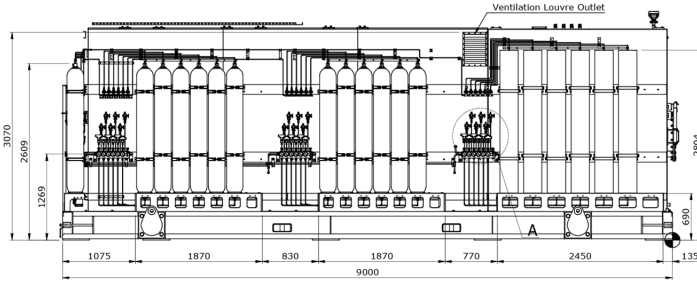

Detail A
Typical Accumulator
PSV Setup

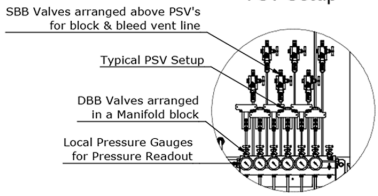

14.7 HPU, Data Table

General Parameter & Description	
Equipment Location	Open area offshore, suitable for operation in an exposed saliferious atmosphere
Equipment dimensions (L x W x H)	9000 mm x 3210 mm x 3379 mm
Equipment Weight	Transport: 20.000 kg (All Accumulators removed) Dry: 25.500 kg Operation: 43.415 kg
Maximum Noise Level	80 dB(A) at 1 m distance outside Cabinet
Temperature Rating	Storage: -18 °C to +50 °C Operation: -5 °C to +45 °C
Hasardous Area Classification	ATEX: Zone 1, IIB, T3 IECEx: Group II, Cat 2G, Zone 1
Hydraulic Control Fluid	MacDermid HW740R
Minimum Hydraulic Cleanliness required	SAE AS4059E Class 6 (B-F)
CE Marking	No
Instrumentation & Electrical	
Ingress Protection for Motors	IP66
Ingress Protection for Transmitters, Solenoids, Junction Boxes, Glands and Lighting, Switch and E-stop	IP56
Hazardous Area Certification:	
Transmitters	Zone 1, IIB, T3. Exi according IECEx
Motors	Zone 1, IIB, T3. Exde according IECEx
Solenoids	Zone 1, IIB, T3. Ex mb e according IECEx
Junction Boxes	Zone 1, IIB, T3. Exe/Ex I according IECEx
Glands	Zone 1, IIB, T3. Exd/e according IECEx
Lighting, Switch and E-stop	Zone 1, IIB, T3. Exde according IECEx
Power Supplies:	
Instrumentation	24 VDC
Motors	Star; 690VAC, 50 Hz, 1 ph
Lighting and Anti-condensation Heaters	230 VAC, 50 Hz, 1 ph

Process		
Hydraulic Pump LP P-201 and P-202	MWP	34.5 MPa
	Design Pressure	37.9 MPa
	Flow Rate	15 l/min
Hydraulic Pump HP P-301 and P-302	MWP	69 Mpa
	Design Pressure	75.9 MPa
	Flow Rate	8 l/min
Hydraulic Pump, Re-circulation P-401	MWP	0.4 MPa
	Design Pressure	0.45 MPa
	Flow Rate	34 l/min
Accumulators LP/SSIV	Quantity x Volume	17 x 57 l
	Design Pressure	37.9 MPa
	Pre-charge pressure	18.5 MPa
	Pre-charge Volume	179.26 m^3
	Type	Bladder
	Material	Carbon Steel
Accumulators HP	Quantity x Volume	6 x 54 l
	Design Pressure	75.6 MPa
	Pre-charge pressure	40 MPa
	Pre-charge Volume	129.6 m^3
	Type	Piston
	Material	Carbon Steel
Hydraulic Output	LP/SSIV System	34.5 MPa
	HP System	69 MPa
Pressure Safety Valves	PSV-401	0.45 MPa
	PSV-203, 204, 205 to 221	37.9 MPa
	PSV-303, 304, 305 to 310	75.9 MPa

14.8 Topside Umbilical Termination Unit (TUTU)

14.9 TUTU, General Arrangement

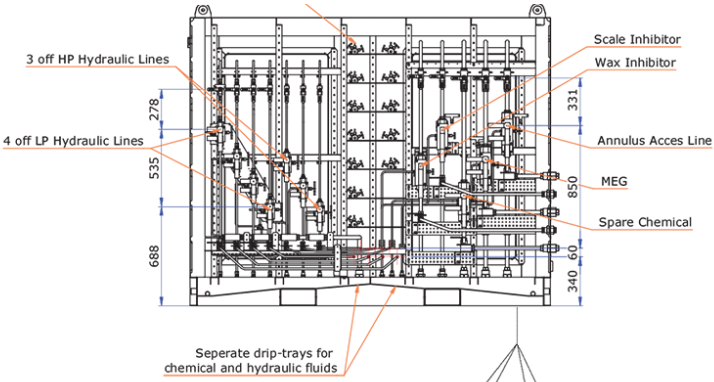

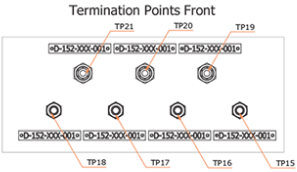

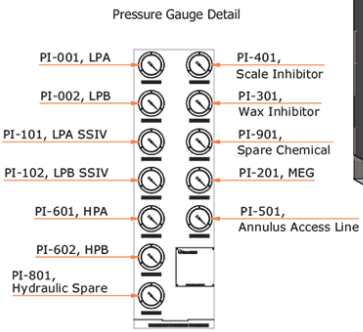

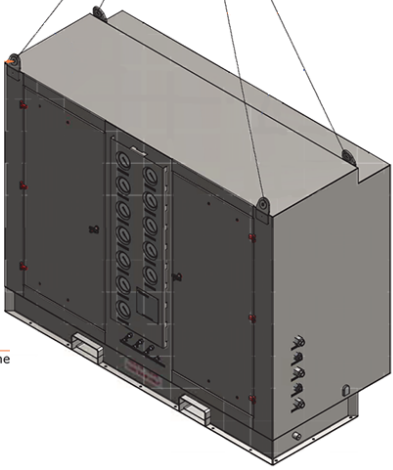

14.10 TUTU, Data Table

TUTU General	
Dimensions, L x W x H	2500 mm x 1115 mm x 2099 mm
Weight (operating)	1450 kg
Weight (MGW)	2000 kg
Classification Rating/ Ingress Protection	Generally IP56 IP66 and Ip67 for Junction Boxes
Temperature Rating	Storage: -18 °C to +50 °C Operation: -5 °C to +45 °C
Hazardous Area Classification	Zone 1, Gas group IIB, temperature Class T3 (ATEX Group II Cat 2G)
Electrical Equipment Certification	Junction Boxes Ee(x)e according IECEx

Hydraulic and Chemical Tubing Pressures

Description	Tubing Size (Process Tubing)	Operating Pressure		Design Pressure		Test Pressure	
		MPa	psi	MPa	psi	MPa	psi
LP Hydraulic	1/2" OD x 0,065" WT	34,5	5.000	38	5.500	57	8.250
HP Hydraulic	3/8" OD x 0,203" ID	69	10.000	75,9	11.000	113,9	16.500
Chemical Lines (SI and WI)	3/4" OD x 0,438" ID	69	10.000	75,9	11.000	113,9	16.500
Chemical Lines (Spare and MEG)	1" OD x 0,562" ID	69	10.000	75,9	11.000	113,9	16.500
AAL	1" OD x 0,562" ID	69	10000	75,9	11.000	113,9	16.500
Return Header	1" OD x 0,562" ID	ATM	ATM	75,9	11.000	113,9	16.500

15 Subsea Control Module, SCM

15.1 SCM Variant 1, General Arrangement

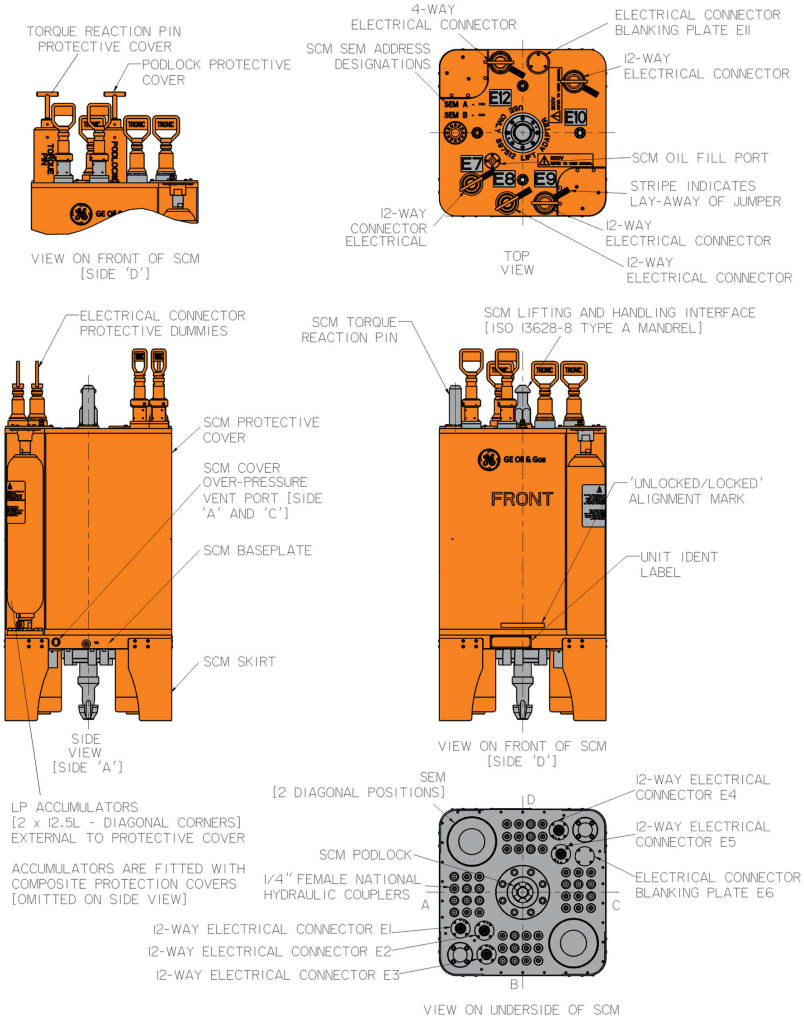

15.2 SCM Variant 1, Hydraulic Schematic

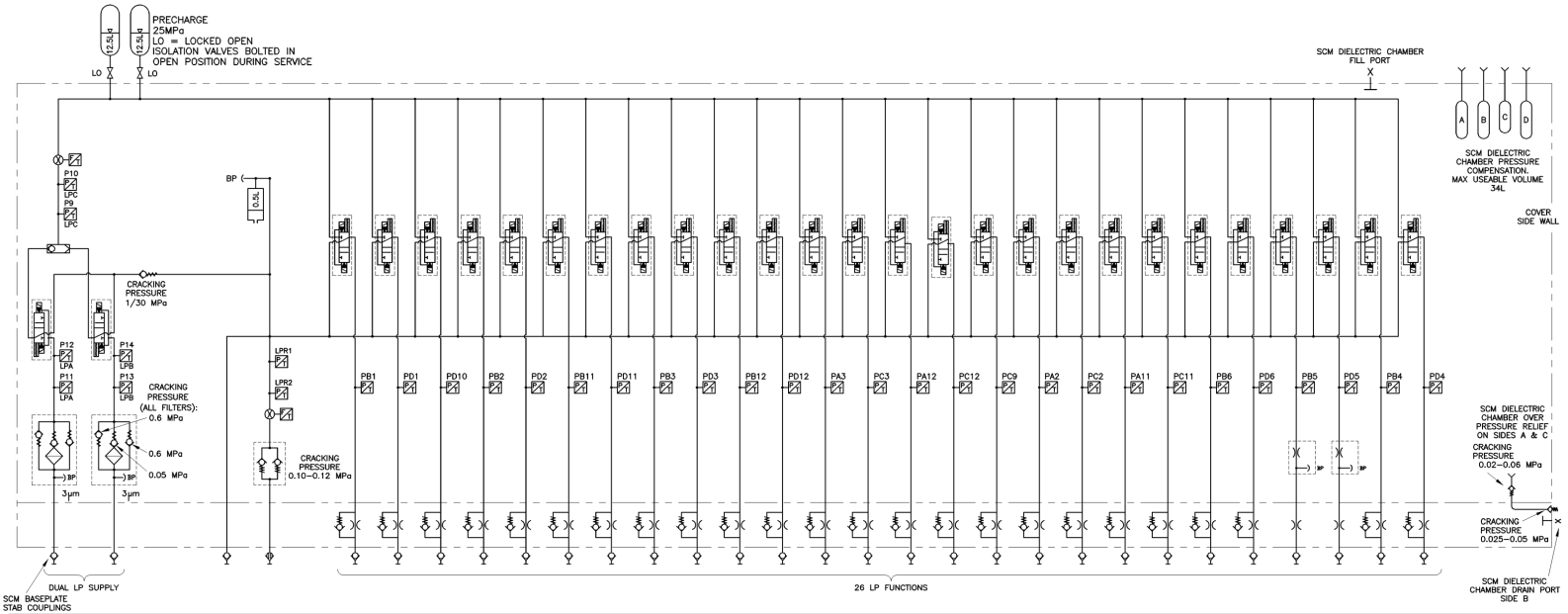

	C1	C10	A1	A10	C8	A7	B1	D1	D10	B2	D2	B11	D11	B3	D3	B12	D12	A3	C3	A12	C12	C9	A2	C2	A11	C11	B6	D6	B5	D5	B4	D4	SCM IDENT
	LPA	LPB	–	–	–	RTN	PIV361–C	PIV261–C	PIV361–O	PIV661–C	PIV161–C	PIV461–O	PIV561–C	PIV661–O	PIV161–O	PIV261–O	PIV561–O	PIV562–C	PIV262–C	PIV162–C	PIV662–C	PIV462–O	PIV562–O	PIV262–O	PIV162–O	PIV662–O	PIV462–C	PIV362–O	CIV005	CIV004	PIV461–C	PIV362–C	PRODUCTION MANIFOLD
	LPA	LPB	–	–	–	RTN	XVO20–O	XVO20–C	XVO21–C	XVO22–O	XVO22–C	XVO23–O	XVO23–C	XVO24–O	XVO24–C	XVO25–O	XVO25–C	XVO26–O	XVO26–C	XVO27–O	XVO27–C	SPARE	SPARE	SPARE	SPARE	SPARE	SPARE	SPARE	SPARE	SPARE	SPARE	XVO21–O	MEG DISTRIBUTION MANIFOLD
	LPA	LPB	–	–	–	RTN	141 SSIV011	141 SSIV012	281 SSIV004	141 SSIV002	281 SSIV002	141 SSIV022	281 SSIV003	141 SSIV001	281 SSIV001	SPARE	SPARE	SPARE	SPARE	SPARE	SPARE	SPARE	SPARE	SPARE	SPARE	SPARE	SPARE	SPARE	SPARE	SPARE	141 SSIV021	SPARE	SDH
	LPA	LPB	–	–	OVERRIDE	RTN	PRV–O	EXOV–O	EDP–UL	PIV–O	AAV–O	MIV–O	SPARE	GSR–C	XOV–O	ACC–V	SPARE	SPARE	SPARE	PIV–E	SPARE	SSR–O	SPARE	SPARE	PRV–E	SPARE	SPARE	SPARE	SPARE	SPARE	GSR–O	ARV–O	IWOCS

LP VENT
TO SEA

NOTE:

1. TAG PREFIX IS DEPENDENT ON SCM DRILL CENTRE LOCATION, REFER TO TAGGING SCHEDULE D100–AJ–SCH–10000 (ALF–20100–00–232) FOR DETAILS

	SYSTEM WORKING PRESSURE	MAX. WORKING PRESSURE	DESIGN PRESSURE	PROOF TEST PRESSURE	PRESSURE GROUP IAW ENGVGC 1.01
LP	34.5MPa	34.5 MPa	37.9 MPa	56.9 MPa	2
RTN	9.1 MPa	9.1 MPa	10.0 MPa	15.0 MPa	N/A

FLOW RESTRICTION	
FLOW DIRECTION	Cv VALUE
AT B5 AND D5	
SUPPLY & RETURN	0.085
ALL OTHER FUNCTIONS	
SUPPLY	0.045
RETURN	0.45

HYDRAULIC SYMBOLS

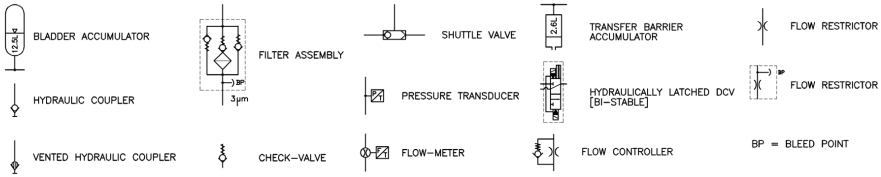

15.3 SCM Variant 2, Hydraulic Schematic

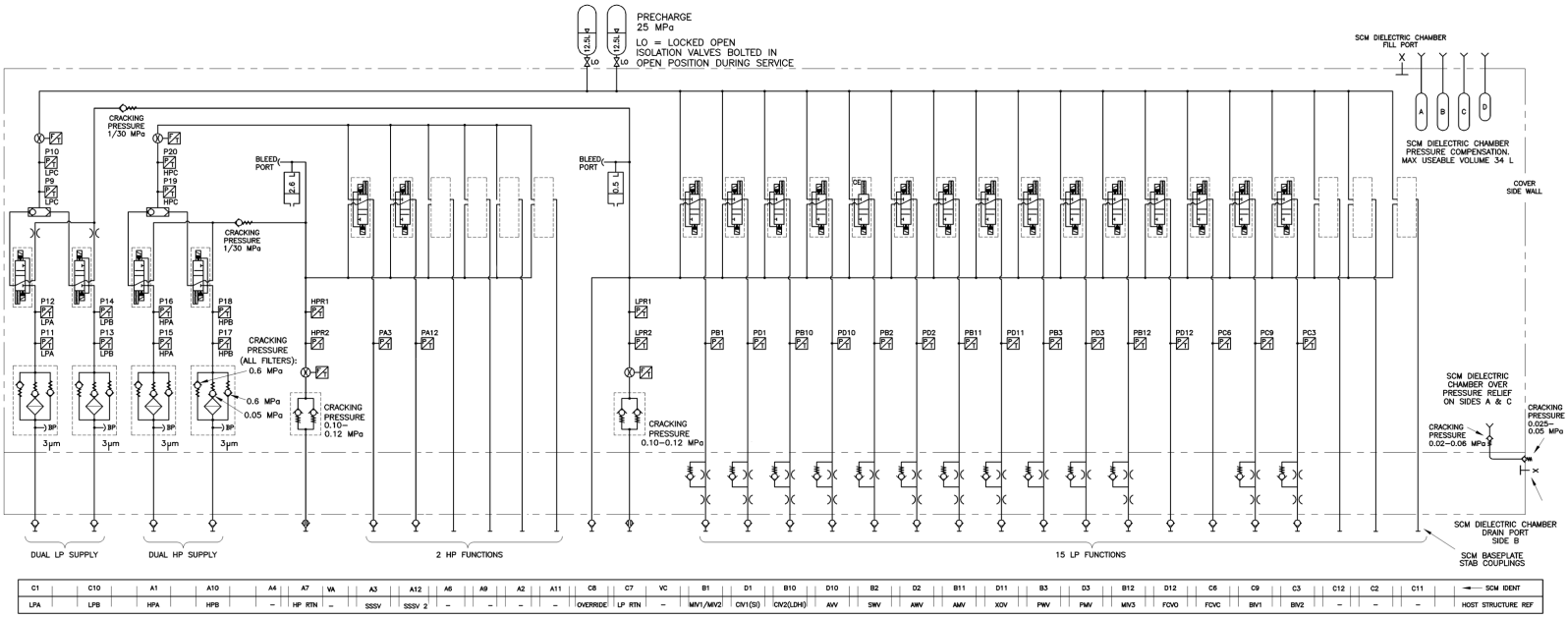

	SYSTEM WORKING PRESSURE	MAX. WORKING PRESSURE	DESIGN PRESSURE	PROOF TEST PRESSURE	PRESSURE GROUP IAW ENGVGC 1.01
LP	34.5MPa	34.5 MPa	37.9 MPa	56.9 MPa	2
HP	69.0 MPa	69.0 MPa	75.9 MPa	113.8 MPa	3
RTN	9.1 MPa	9.1 MPa	10.0 MPa	15.0 MPa	N/A

FLOW RESTRICTION	
FLOW DIRECTION	Cv VALUE
AT LP SUPPLY DCVs RETURN PORTS	
BOTH	0.085
AT SWV, PMV AND PWV FUNCTIONS	
SUPPLY	0.045
RETURN	0.45
AT LP FUNCTIONS: B1,D1,B10,D10,D2,B11,D11,B12,C9,C3	
SUPPLY	0.036
RETURN	0.072

15.4 SCM Variant 2, Interfaces

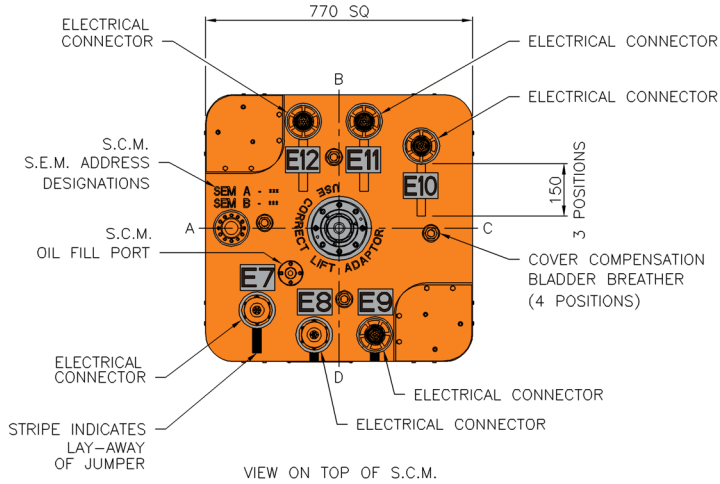

VIEW ON TOP OF S.C.M.

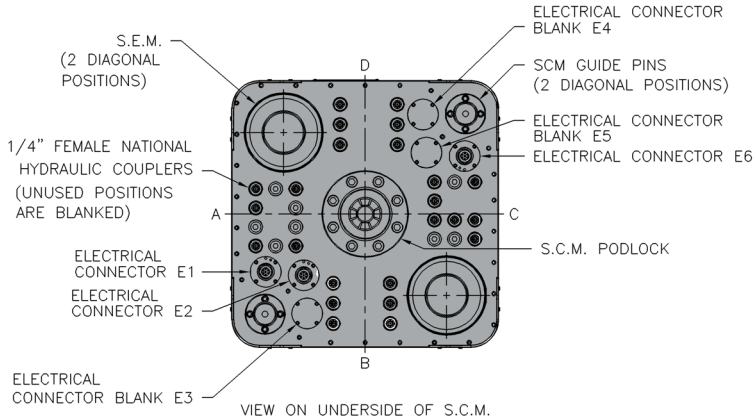

VIEW ON UNDERSIDE OF S.C.M.

15.5 SCM Data Table

Specifications			
Item	Parameter	Variant 1 SCM	Variant 2 SCM
SCM	Manufacturer:	GE Oil & Gas	GE Oil & Gas
	Type	ModPod	ModPod 200 Series -201 Configuration
	Part number:	ALF-43001-00	ALF-43000-00
Subsea Electronics Module (SEM):	Manufacturer:	GE Oil & Gas	
	Type	SEM Star 5	
	Operating voltage:	300 to 600 V AC	
	Frequency:	50 / 60 Hz	
	Current:	1 A max	
	Comms:	Production Tree: Ethernet Production Manifold: Ethernet SDH: DSL MDM: DSL IWOCS: DSL	
	SEM options:	Dual	
	Power / Comms options:	CAPS	
	SEM cross- strapping options:	Comms cross-strapped via Ethernet	
Max working pressure	LP system:	34.5 MPa	34.5 MPa
	HP system:	N/A	69.0 MPa
	Return system:	9.1 MPa	9.1 MPa
Design pressure	LP system	38.0 MPa	38.0 MPa
	HP system:	N/A	75.9 MPa
	Return system:	10.0 MPa	10.0 MPa
Working fluid	Manufacturer: Type:	MacDermid, Oceanic HW740R	
Podlock	Interface: Hex: Torque rating: SWL:		Based on ISO 13628-8 type A 72A/F 4000 Nm max 3 Tonnes
Environmental	Design operating depth: Design life: Design temperature range: Operating: Storage:		300 m max 25 years –5 °C to +40 °C –18 °C to +50 °C
Size and weight	Height: Plan: Mass:		1550 mm (excluding protective caps) 770 mm x 770 mm 2000 kg max
Dielectric fluid	Type:		IEC 60296

15.6 Electronic Hydraulic Consolidation Model (EHCM)

15.7 General Arrangement

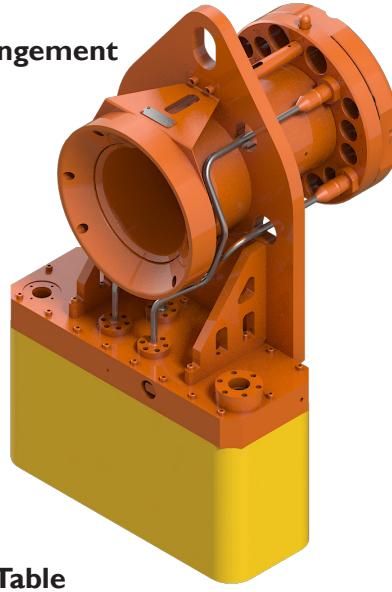

15.8 EHCM, Data Table

Technical data		
Item	Parameter	Specification
Return Line Check Valve. Dual, Metallic	Maximum Working Pressure Cracking Perssure	34,5 MPa 0,1-0,12 MPa
Seawater Check Valves, Non-metallic (Acetyl Resin)	Cracking Pressure	0,025-0,05 MPa
Dielectric Chamber over Pressure Relief, Single, metallic	Cracking Pressure	0,02-0,06 MPa
Environmental	Design Depth, operation Design Life Design Temperature, operation Design Temperature, Storage	300 m 25 years -5 °C to +40 °C -18 °C to +50 °C
Size and Weight	Height Plan Mass	1020 mm 600 mm x 600 mm 326 kg (Oil filled in Air) 249 kg (Oil filled in Water)
Dielectric Fluid	Type	IEC 60296
Electrical Connectors, External, Tronic	Type	Digitron, Size 10, ROV Bulkhead, Receptacle Connector

Technical data, continued

Item	Parameter	Specification
Hydraulic Arrangement	LP Supply Methods	Dual Supply Consolidated by Shuttle Valve. Open loop (Vent to Sea)
Maximum Working Pressure	LP System Return System	34,5 MPa 9,1 MPa
Design Pressure	LP System Return System	38,0 MPa 10,0 MPa
Working Fluid, MacDermid	Type	Oceanic HW740R
Di-electric Fluid, MacDermid	Type	Oceanic HW740R
Directional Control Valve (DCV) Mono-stable	Type Solenoid Voltage Current Max Working Pressure Normal Position Solenoid Control	3-way, 2 position, Dual Coil 24 V dc 0,6 A dc 69,0 MPa Actuator to Return Continuous with flyback diode transient suppretion on Switch off
Shuttle Valves,	Type Max Working Pressure	3-way, 2 position 69,0 MPa
MQC Plate mounted Hydraulic Couplers	Manufacturer Type Max Working Pressure Size	National RS-Series 69,0 MPa 1/2”
Hydraulic Filter	Max Working pressure Element Bypass Cracking Pressure Reverse Flow	35,0 MPa 3 μ 0,6 MPa Full reverse Flow Capability
Compensation Accumulator	Type Max Working Pressure Nominal Volume	Stainless Steel, Piston 15,0 MPa 0,5 l

16 FLX 360 Connection System

16.1 Fixed Plates

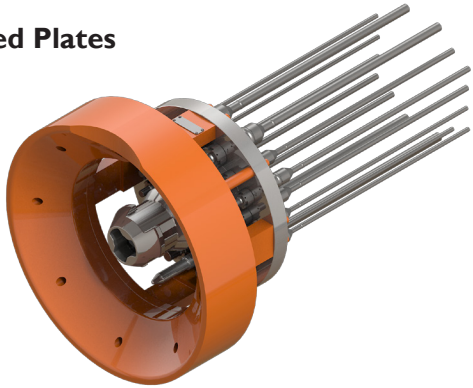

Technical data		
Dimensions:	Diameter: Length:	600 mm 350 mm (excluding Couplers/Piping)
Weight:	in Air In Water	117 kg 98 kg

16.2 Long term Protectice Cover

Techical data		
Dimensions:	Height: Width: Length:	520 mm 370 mm 535 mm
Weight:	in Air In Water	97 kg 85 kg
Lift Point WLL:	400 kg	

16.3 FLX360 Flying Lead Terminations

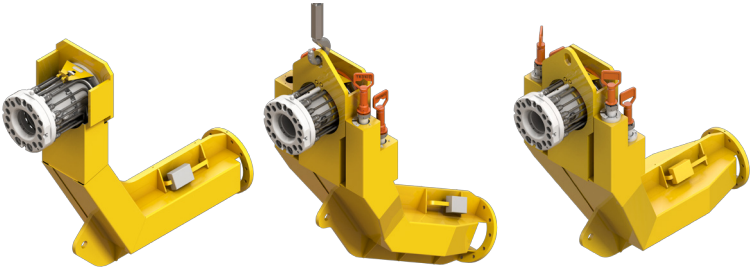

Dimensions		
Angle	0°	30°
Dimensions:	Height: 1763 mm	Height: 2153 mm
	Width: 450 mm/778 mm	Width: 450 mm/772 mm
	Length: 1699 mm	Length: 1708 mm
Weight	In Air: 459-531 kg In Water: 399-462 kg	

16.4 FLX360 Fixed Test & Flushing Plate

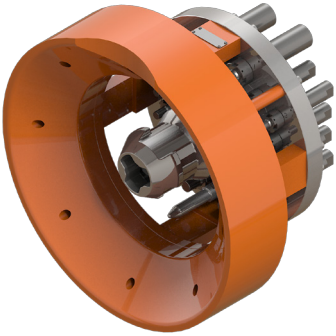

Dimensions	
Diameter:	600 mm
Length:	Approx. 500 mm
Weight:	in Air: 120 kg

16.5 FLX360 Flying Test & Flushing Plate

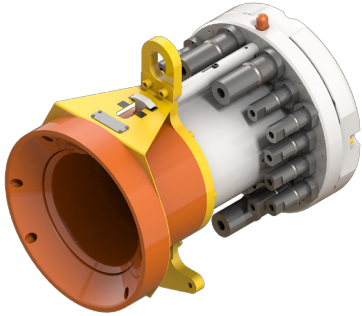

Dimensions	
Height:	520 mm
Width:	370 mm
Length:	535 mm
Weight in Air	100 kg

16.6 FLX360 Compensation Plate

Dimensions	
Height:	1255 mm
Width:	380 mm
Length:	901 mm
Weight in Air	118 kg
Weight In Water	99 kg

16.7 ROV Tool

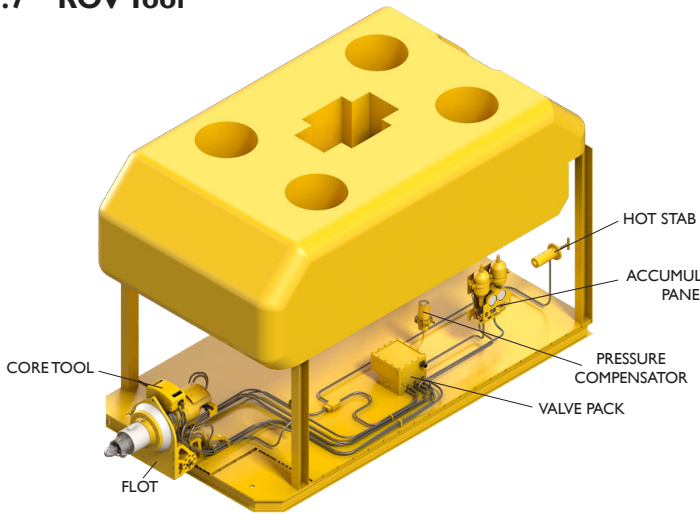

Techincal data				
Estimated Weight	Core Tool	FLOT	Valve Pack	Accumulator Panel
In Air	163 kg	69 kg	38 kg	20 kg
In Water	142 kg	60 kg	33 kg	18 kg
FLOT Roll	+/- 10°			
FLOT Pitch	25° Aft, 90° Forward			

16.8 FLX 340 Diver/Workshop Tool

Techincal data	
Weight in Air	160 kg
Lift Point WLL:	500 kg

17 Reference Data

DESCRIPTION	PART NUMBER	PRODUCT GROUP	MANUAL REFERENCE NUMBER
DRILLING GUIDE BASE WITH RETRIEVABLE GUIDEPOST W/ MINI GUIDEPOST	R50880-6INP	WH	D110-AY-MAN-10000
36" X 1.50" MS- 700 LOW PRESSURE HOUSING W/ CUSTOMER SUPPLIED EXT.JT	R50786-2INP	WH	D110-AY-MAN-10000
BIT GUIDE FUNNEL	A10378-20	WH	D110-AY-MAN-10000
18-3/4" MS-700 HIGH PRESSURE HOUSING W/ CUSTOMER SUPPLIED EXT.JT	R49780-2INP	WH	D110-AY-MAN-10000
NOMINAL SEAT PROTECTOR	H57034-1	WH	D110-AY-MAN-10000
18-3/4" X 13-3 /8" MS- 700 CASING HANGER W/ CUSTOMER SUPPLIED PUP JT	R50499-62INP	WH	D110-AY-MAN-10000
MS-1 L ANNULUS SEAL ASSEMBLY (PRIMARY)	H195733-1INP	WH	D110-AY-MAN-10000
MS-1 ANNULUS SEAL ASSEMBLY	H57028-1INP	WH	D110-AY-MAN-10000
18-3/4" X 10-3/4" MS-700 CASING HANGER W/ CUSTOMER SUPPLIED PUP JT	R50500-83INP	WH	D110-AY-MAN-10000
18-3/4" X 13-3/8" WEAR BUSHING	H57224-10	WH	D110-AY-MAN-10000
18-3/4" MS-700 LOCKDOWN BRIDGING HANGER	H147448-12INP	WH	D110-AY-MAN-10000
18-3/4" X 10-3/4" WEAR BUSHING	H57302-24	WH	D110-AY-MAN-10000
18-3/4" MS-700 CORROSION CAP	H288500-6	WH	D110-AY-MAN-10000
18-3/4" MS-700 DEBRIS CAP	R147855-1	WH	D110-AY-MAN-10000
PRODUCTION TREE	A110575-385C39	XT	D100-AY-IOM-10017
TREE / THS MAINTENANCE STAND	A190301-428C39	XT	D100-AY-IOM-10017
TREE SHIPPING SKID	A190301-221C39	XT	D100-AY-IOM-10017
TREE/THS TEST STUMP	A190301-360C39	XT	D100-AY-IOM-10017
TREE STAB SEAL REMOVAL TOOL	A190324-137	XT	D110-AY-MAN-10001
TREE OFFSET HANDLING TOOL/HANDLING CAP	A110752-61C39	XT	D100-AY-IOM-10017
TREE TEST PRESSURE/LIFTING CAP	A110752-63C39	XT	D100-AY-IOM-10017
ROV DEPLOYABLE SUBSEA TREE CAP	A110927-72C39	XT	D100-AY-IOM-10017
SECONDARY UNLOCK TOOL	A111231-9	XT	D100-AY-IOM-10017
TREE RUNNING TOOL	A110752-62C39	XT	D100-AY-IOM-10017
FLOW CONTROL MODULE	A140575-3C39	XT	D100-AY-IOM-10017
CAMERON CHOKE	A179069-1C39	XT	A179069-1/A120459
SLING SET	A300109-583	XT	D100-AY-IOM-10017
FCM RUNNING TOOL	A153800-1C39	XT	D100-AY-IOM-10017
FCM RUNNING TOOL SHIPPING BASKET	A301301-179C39	XT	D100-AY-IOM-10017
FCM TEST SKID & MAINTENANCE STAND	A186010-1C39	XT	D100-AY-IOM-10017
FCM SHIPPING SKID	A185798-1C39	XT	D100-AY-IOM-10017

DESCRIPTION	PART NUMBER	PRODUCT GROUP	MANUAL REFERENCE NUMBER
BOP GUIDE FUNNEL	A110920-2082	XT	D100-AY-IOM-10017
OFFSHORE WORKSHOP CONTAINER	A300380-438	XT	N/A
GUIDE POST EXTENSION	A111429-13	XT	D100-AY-IOM-10017
TUBING HANGER RUNNING TOOL	A180400-1C39	XT	D100-AY-IOM-10017
THRT SHIPPING SKID	A301301-123	XT	D100-AY-IOM-10017
THRT TEST STAND	A190301-222C39	XT	D100-AY-IOM-10017
THRT HANDLING/TEST TOOL	A190408-25C39	XT	D100-AY-IOM-10017
EMERGENCY TUBING HANGER RECOVERY TOOL	A110737-36	XT	D100-AY-IOM-10017
TH HANDLING/TEST TOOL	A110899-25C39	XT	D100-AY-IOM-10017
TH TEST STAND	123061-30C39	XT	D100-AY-IOM-10017
TUBING HANGER	A180500-1C39	XT	D100-AY-IOM-10017
TH HANG OFF PLATE	A110878-60C39	XT	D100-AY-IOM-10017
TH SHIPPING SKID	A111253-30	XT	D100-AY-IOM-10017
THS BORE PROTECTOR	A50044-70C39	XT	D100-AY-IOM-10017
THS HANDLING CAP	A20152-9	XT	D100-AY-IOM-10017
THS CORROSION CAP	H28500-6	XT	D100-AY-IOM-10017
DUALBORE –	N202001-E289A	XT	D100-AY-IOM-10017
TUBING HEAD SPOOL (THS)	A110743-369C39	XT	D100-AY-IOM-10017
THS SHIPPING SKID	A190301-329C39	XT	D100-AY-IOM-10017
LINEAR ACTUATOR OVERRIDE TORQUE TOOL 7”	A162048-2	XT (ROV SUPPLIER)	D141-AY-IOM-10005
LINEAR ACTUATOR OVERRIDE TORQUE TOOL 2”	A162048-3	XT (ROV SUPPLIER)	D141-AY-IOM-10005
ROV CLASS 4 TORQUE TOOL	A128666-5	XT (ROV SUPPLIER)	D100-AG-SPC-10004
VX GASKET INSTALLATION TOOL	A128666-7	XT (ROV SUPPLIER)	D100-AG-SPC-10004
VX GASKET PROFILE CLEANING TOOL (BRUSH TYPE)	A128666-4	XT (ROV SUPPLIER)	D100-AG-SPC-10004
ROV DUAL HOT STABS	A128666-11	XT (ROV SUPPLIER)	D100-AG-SPC-10004
MANUAL TORQUE TOOL	A128666-12	XT (ROV SUPPLIER)	D100-AG-SPC-10004
CLEAN OUT TOOL (SUCK AND BLOW)	A128666-3	XT (ROV SUPPLIER)	D100-AG-SPC-10004
HYDRAULIC FLUID INJECTION SKID	A128666-8	XT (ROV SUPPLIER)	D100-AG-SPC-10004
RCU (REMOTE CONTROL UNIT)	A128666-6	XT (ROV SUPPLIER)	D100-AG-SPC-10004

DESCRIPTION	PART NUMBER	PRODUCT GROUP	MANUAL REFERENCE NUMBER
VCCS PROTECTION DEBRIS CAP, SIZE 450	N202001-452203	MCS	D141-AY-MAN-10016
VCCS PROTECTION DEBRIS CAP, SIZE 720	N202001-722201	MCS	D141-AY-MAN-10016
VCCS, PRESSURE CAP, SIZE 450	N202001-E289I	MCS	D141-AY-MAN-10030
VCCS DOWNFACING, SIZE 450, DUALBORE, Well Jumper Kit	N113001-E289A	MCS	D141-AY-MAN-10017 D141-AY-MAN-10015
VCCS UPFACING. SIZE 450, DUAL BORE, TEST AND FABRICATION STAND	N112001-E289C	MCS	D141-AY-MAN-10017 D141-AY-MAN-10015
VERTICAL CLAMP CONNECTION TOOL VCCT SYSTEM 450	N100752-07	MCS	D141-AY-MAN-10015 D141-AY-MAN-10035
VERTICAL CLAMP CONN. TOOL, TRANSPORT FRAME SYSTEM 400 AND 450	N100483-6	MCS	D141-AY-MAN-10017 D141-AY-MAN-10015
ACID CLEANING HEAD. FOR FEMALE HUB	N600000V1- S450	MCS	D141-AY-MAN-10009 D141-AY-MAN-10015
CLEANING TOOL, UPFACING HUB, VFCT 450	N570002-E289	MCS	D141-AY-MAN-10010 D141-AY-MAN-10015 D141-AY-MAN-10017
ACID CLEANING HEAD, FOR MALE HUB	N620000V2-S450	MCS	D141-AY-MAN-10015
CLEANING TOOL, DOWNFACING HUB, VMCT 450	N550000-V02	MCS	D141-AY-MAN-10015
SEAL REPLACEMENT TOOL, DOWNFACING HUB, VSRT 450	N560000-V01	MCS	D141-AY-MAN-10011 D141-AY-MAN-10015
TOOL DEPLOYMENT BASKET, VCCS 450	N150127-E289F	MCS	D141-AY-MAN-10018
CLEANING TOOL, UPFACING HUB, VFCT 450, C175 A250-275, ASSEMBLY	N570000-V02	MCS	D141-AY-MAN-10010 D141-AY-MAN-10025
MULTIBORE CAP ASSEMBLY SIZE 720, SUBSEA PRESSURE TEST CAP FOR FEMALE HUB, ASSEMBLY	N202001-E289B	MCS	D141-AY-MAN-10024 D151-AY-MAN-10013
ROV TOOLS, VFCT 720 MULTIBORE	N582000-V02	MCS	D141-AY-MAN-10021
ROV VERTICAL ACID CAP FOR FEMALE HUB, SIZE 720	N116080V2-E289A	MCS	D141-AY-MAN-10029
TORQUE TOOL. TT 30kNm. VG TYPE 72A	N102100-7202	MCS	D141-AY-MAN-10012
TORQUE TOOL CALIBRATION UNIT, TT CU 30kNm, VG TYPE 72A	N102200-7202	MCS	D141-AY-MAN-10012
ICHTHYS UPSTREAM, RCR SYSTEM	N100000-24	MCS	D141-AY-MAN-10013 D141-AY-MAN-10034
GUIDE POSTS LENGTH: 3.8 M/4.8M/6M	N140100-E289MA N140100-E289MB N140100-E289MC	MCS	D100-AY-MAN-10013
BACK SEAL TEST UNIT	N103070-02	MCS	D141-AY-MAN-10023
6-SLOT PRODUCTION MANIFOLD MODULE – DRILL CENTER B_DC1A	N00001-E289EA	MCS	D141-AY-IOM-10000
6-SLOT PRODUCTION MANIFOLD MODULE – DRILL CENTER B_DC1B	N00001-E289EB	MCS	D141-AY-IOM-10000

DESCRIPTION	PART NUMBER	PRODUCT GROUP	MANUAL REFERENCE NUMBER
6-SLOT PRODUCTION MANIFOLD MODULE – DRILL CENTER B_DC1C	N00001-E289EC	MCS	D141-AY-IOM-10000
6-SLOT PRODUCTION MANIFOLD MODULE – DRILL CENTER B_DC4	N00001-E289ED	MCS	D141-AY-IOM-10000
6-SLOT PRODUCTION MANIFOLD MODULE – DRILL CENTER B_DC5	N00001-E289EE	MCS	D141-AY-IOM-10000
6-SLOT PRODUCTION MANIFOLD FOUNDATION – DRILL CENTER B_DC1A	N00001-E289DA	MCS	D141-AY-IOM-10000
6-SLOT PRODUCTION MANIFOLD FOUNDATION – DRILL CENTER B_DC1B	N00001-E2890B	MCS	D141-AY-IOM-10000
6-SLOT PRODUCTION MANIFOLD FOUNDATION – DRILL CENTER B_DC1C	N00001-E289DC	MCS	D141-AY-IOM-10000
6-SLOT PRODUCTION MANIFOLD FOUNDATION – DRILL CENTER B_DC4	N00001-E2890D	MCS	D141-AY-IOM-10000
6-SLOT PRODUCTION MANIFOLD FOUNDATION – DRILL CENTER B_DC5	N00001- E289DE	MCS	D141-AY-IOM-10000
6-SLOT PRODUCTION MANIFOLD FOUNDATION, LIFTING EQUIPMENT, ASSEMBLY	N02100-E289DA	MCS	D141-AY-IOM-10000
UMBILICAL MULTIBORE HUB ASSEMBLY TYPE 1	N1064500-E289AB	MCS	D151-AY-MAN-10001 D151-AY-MAN-10003
UMBILICAL MULTIBORE HUB ASSEMBLY TYPE 2	N1064500-E289BB	MCS	D151-AY-MAN-10001 D151-AY-MAN-10003
SDH PORCH TYPE 1 W/CLAMP	N1044500-E289AB	MCS	D151-AY-MAN-10003
SDH PORCH TYPE 2 W/CLAMP	N1044500-E289BB	MCS	D151-AY-MAN-10003
ROV TOOLS. SEAL REPLACEMENT. HSRT 450	N560001-H02	MCS	D151-AY-MAN-10008 D151-AY-MAN-10003
ROV TOOLS. CLEAN-INSP, HMCT 450	N550001-H04	MCS	D151-AY-MAN-10002 D151-AY-MAN-10003
HORIZONTAL ACID CAP FOR MALE HUB 450 MB	N116045H1-M450	MCS	D151-AY-MAN-10014 D151-AY-MAN-10015 D151-AY-MAN-10003
CHARGING CAP FOR MB MALE HUB	N202001-E289C	MCS	D151-AY-MAN-10000 D151-AY-MAN-10003
PURGING CAP FOR MB MALE HUB	N202001-E289K	MCS	D151-AY-MAN-10000
COMPENSATION CAP / CL FOR MB MALE HUB	N202001-E289L	MCS	D151-AY-MAN-10000
PRESSURE CAP FOR MB MALE HUB	N202001-E289D	MCS	D151-AY-MAN-10000 D151-AY-MAN-10003
ROV HANDLE, TYPE D	N228111-E289A	MCS	D141-AY-MAN-10023
SHOCT 12-450 CONNECTION TOOL	N108500-30	MCS	D151-AY-MAN-10006 D151-AY-MAN-10003

DESCRIPTION	PART NUMBER	PRODUCT GROUP	MANUAL REFERENCE NUMBER
SHO 12-400, TRANSPORT SKID	N108560-30	MCS	D151-AY-MAN-10003
MONITORING/TEST CAP FOR 450 MB UTA	N202001-E289F	MCS	D151-AY-MAN-10010 D151-AY-MAN-10003
PRESSURE LIGHT CAP FOR MB FEMALE HUB	N202001-E289G	MCS	D151-AY-MAN-10011 D151-AY-MAN-10003
LIGHT DUTY CLAMP SIZE 450	N203001-4581	MCS	D151-AY-MAN-10009 D151-AY-MAN-10003
ROV TOOLS . CLEAN-SEAL-REPL-INSP HFC T 450	N570001-H03	MCS	D151-AY-MAN-10004 D151-AY-MAN-10003
HORIZONTAL ACID CAP FOR FEMALE HUB 450 MB	N116045H2-M450	MCS	D151-AY-MAN-10014 D151-AY-MAN-10015 D151-AY-MAN-10003
WALKING STICK	N111144 -02	MCS	D151-AY-MAN-10003
SHO/UTA SIZE 12. LIFTING YOKE	N106001-104	MCS	D151-AY-MAN-10005 D151-AY-MAN-10003
TOOL DEPLOYMENT BASKET HCCS 12/450 SHO	N150127-E289E	MCS	D151-AY-MAN-10007
TT ISO 13628-8.CL5. CALLIBRATION UNIT	E000-TCH-0006	MCS	D141-AY-MAN-10014 D151-AY-MAN-10003
TORQUE TOOL TT I SO 13628-8. C L5	E000-TCG-0003	MCS	D141-AY-MAN-10014 D151-AY-MAN-10003
FLOT	N103070-03	MCS	D141-AY-IOM-10005
SDH MODULE	N00001-E289JF	MCS	D141-AY-IOM-10001
SDH FOUNDATION	N00001-E289DF	MCS	D141-AY-IOM-10001
SUBSEA DISTRIBUTION HUB, LIFTING EQUIPMENT, ASSEMBLY	N02100-E289DF	MCS	D141-AY-IOM-10001
WELL JUMPER	N041070-E289HA	MCS	D100-AY-IOM-10004
SHIPPING STAND HIGH END	N65050-E289TH	MCS	D100-AY-IOM-10004
SHIPPING STAND LOW END	N65100-E289TH	MCS	D100-AY-IOM-10004
SHIPPING STAND LOW INTERMEDIATE	N65150-E289TH	MCS	D100-AY-IOM-10004
FABRICATION STAND LOW END	N00100-E289RA	MCS	D141-AY-MAN-10020
FABRICATION STAND HIGH END	N00200-E289RA	MCS	D141-AY-MAN-10020
GEL CAP FOR DUALBORE MALE HUB, SIZE 450	N202001-E289H	MCS	D141-AY-MAN-10031
HCCS DEBRIS CAP FOR FEMALE HUB	N202001-452101	MCS	D141-AY-MAN-10032 D151-AY-MAN-10003
CAMERA INSPECTION ROV OPERATED	N540000-H01	MCS	D141-AY-MAN-10033 D151-AY-MAN-10003
SX INSTALLATION TOOL KIT	N204450-T001	MCS	D151-AY-MAN-10003
MULTIBORE SEAL, SIZE 450	N140301-45002A	MCS	D141-AY-PRC-10008
MULTIBORE SEAL, SIZE 450 WITHOUT POPPET OPENERS	N140301-E289C	MCS	D141-AY-PRC-10008

DESCRIPTION	PART NUMBER	PRODUCT GROUP	MANUAL REFERENCE NUMBER
1/2 INCH API 10.000 PSI ROV BALL VALVE	N100744-E289G	MCS	D141-AY-MAN-10028
1/2 INCH API 10.000 PSI ROV BALL VALVE, WT PIPE END 2.11 MM, LP LINES	N100744-E289I	MCS	D141-AY-MAN-10028
MANUAL: INSTALLATION OPERATION AND MAINTENANCE MANUAL - 3/4" MULTITURN MANUAL GATE VALVE - OLIVER	N100744-E289E	MCS	D141-AY-MAN-10027
SURFACE TREE TENSION FRAME	A111373-3C38	CWOR	D100-AY-MAN-10009
SURFACE TEST TREE SYSTEM	A110757-23C38	CWOR	D100-AY-IOM-10002
RISER CIRCULATION HEAD	A111018-14C38	CWOR	D100-AY-IOM-10002
SWIVEL JOINT	A955386-2C38	CWOR	D100-AY-IOM-10002
RISER SPIDER	A110101-7C38	CWOR	D100-AY-IOM-10002
RISER SPIDER GIMBAL	A20675-69C38	CWOR	D100-AY-IOM-10002
CASED WEAR JOINT	A110756-12C38	CWOR	D100-AY-IOM-10002
TENSION JOINT	A110062-14C38	CWOR	D100-AY-IOM-10002
45ft COMPLETION RISER JOINT	A111710-1C38	CWOR	D100-AY-IOM-10002
20ft COMPLETION RISER JOINT	A111710-2C38	CWOR	D100-AY-IOM-10002
15ft COMPLETION RISER JOINT	A111710-3C38	CWOR	D100-AY-IOM-10002
10ft COMPLETION RISER JOINT	A111710-4C38	CWOR	D100-AY-IOM-10002
5ft COMPLETION RISER JOINT	A111710-5C38	CWOR	D100-AY-IOM-10002
LOWER STRESS JOINT	A110753-14C38	CWOR	D100-AY-IOM-10002
EMERGENCY DISCONNECT PACKAGE (EDP)	A110751-21C38	CWOR	D100-AY-IOM-10002
LOWER RISER PACKAGE (LRP)	A110750-11C38	CWOR	D100-AY-IOM-10002
BOP SPANNER JOINT	A111999-9C38	CWOR	D100-AY-IOM-10002
HYDRALIC HOSE BUNDLE WITH QUICK CONNECTORS, 15M LEG - SUPPLIED AS PART OF THE RISER SPIDER	A207106-10	CWOR	D100-AY-IOM-10002
RISER C SPANNER	A110764-11	CWOR	D100-AY-IOM-10002
RISER JOINT HANDLE/TEST TOOL	A111705-3C38	CWOR	D100-AY-IOM-10002
RISER JOINT HANDLING TOOL	A111706-3C38	CWOR	D100-AY-IOM-10002
RISER SEAL INSTALLATION TOOL	A190324-136	CWOR	D100-AY-IOM-10002
U-SEAL CHANGE OUT TOOL	A190324-150	CWOR	D100-AY-IOM-10002
HYDRAULIC TORQUE TOOL	A942462-4C38	CWOR	D100-AY-IOM-10002
MANUAL TORQUE TOOL	A110102-10	CWOR	D100-AY-IOM-10002
SHEAR SUB FISHING TOOL	A120115-2	CWOR	D100-AY-IOM-10002
ROV LINEAR OVERRIDE TOOLF/STT VALVES	A110474-8C38	CWOR	D100-AY-MAN-10014
TEST SHEAR SUB	A970098-1	CWOR	D100-AY-IOM-10002
45' RISER SHIPPING BASKET	A301301-181C38	CWOR	D100-AY-IOM-10002
CIRCULATION HEAD C/W CASED WEAR JOINT BASKET	A301301-185C38	CWOR	D100-AY-IOM-10002
RISER SPECIALS BASKET (20', 15', 10' + tools)	A301301-184C38	CWOR	D100-AY-IOM-10002

DESCRIPTION	PART NUMBER	PRODUCT GROUP	MANUAL REFERENCE NUMBER
STRESS JOINT BASKET	A301301-187C38	CWOR	D100-AY-IOM-10002
BOP SPANNER JOINT BASKET (For BOPSJ and THRT)	A301301-186C38	CWOR	D100-AY-IOM-10002
STT C/W CASED WEAR JOINT BASKET	A301301-183C38	CWOR	D100-AY-IOM-10002
TENSION JOINT BASKET	A301301-182C38	CWOR	D100-AY-IOM-10002
STT C/W SWIVEL BASKET	A301301-194C38	CWOR	D100-AY-IOM-10002
LRP TEST & HANDLING CAP	A110752-59C38	CWOR	D100-AY-IOM-10002
EDP TEST & HANDLING CAP	A110752-60C38	CWOR	D100-AY-IOM-10002
RISER TEST PIN	A190043-30C38	CWOR	D100-AY-IOM-10002
LRP TEST & SHIPPING SKID	A19030 1-400C38	CWOR	D100-AY-IOM-10002
EDP TEST& SHIPPING SKID	A190301-420C38	CWOR	D100-AY-IOM-10002
STRESS JOINT TEST PIN	A190145-20C38	CWOR	D100-AY-IOM-10002
XT/THS INSPECTION STAND (COMPATIBLE WITH EDP & LRP)	A190301-428C39	CWOR	D100-AY-IOM-10002
XT -57 TEST GAP	A110156-88C38	CWOR	D100-AY-IOM-10002
LRP GSR TEST TOOL	A112679-29	CWOR	D100-AY-IOM-10002
RL RISER STAB GUIDE	A190324-155	CWOR	D100-AY-IOM-10002
SURFACE CONTROL UNIT	ALG-82000-00	IWOCS	D100-AY-MAN-10005
SUBSEA TREE WO CONTROL UMBILICAL REEL C/W WITH REEL STRUCTURE, DRUM AND SURFACE JUCTION BOX	ALG-81400-00	IWOCS	D150-AY-IOM-10003
WORKOVER UMBILICAL	TOEH0117-13399A	IWOCS	D150-AY-IOM-10005
MASTER CONTROL STATION	ALG-83000-00	IWOCS	D150-AY-IOM-10000 D100-AY-IOM-10005 D100-AJ-IOM-10007
REMOTE PSD/ESD/EQD PANELS	ALG-89030-00	IWOCS	D150-AY-IOM-10000
REMOTE PSD PANEL	ALG-89000-00	IWOCS	D150-AY-IOM-10000
REMOTE WORKSTATION	S93615	IWOCS	D150-AY-IOM-10000
REMOTE ESD PANEL	ALG-89020-00	IWOCS	D150-AY-IOM-10000
IWOCS MCS SOFTWARE	ALG-83300-00-033	IWOCS	D100-AY-IOM-10005 D100-AY-IOM-10006
TUBING HANGER UMBILICAL SHEAVE	ALG-84211-00	IWOCS	D150-AY-IOM-10008
HYDRAULIC POWER UNIT	ALG-85000-00	IWOCS	D100-AY-MAN-10004
JUMPER BASKET/STORAGE CONTAINER	ALG-88000-00	IWOCS	N/A
WO & TH REELER ELECTRICAL JUMPER (SCU TO REEL)	ALG-80009-00	IWOCS	D150-AY-PRC-10005 D150-AY-IOM-10004
IWOCS HYDRAULIC JUMPER REEL 1 - HPU TO REELS	ALG-80100-00	IWOCS	D100-AY-IOM-10010
IWOCS HYDRAULIC JUMPER STT 1 - HPU TO STT CONTROL PANEL	ALG-80101-00	IWOCS	D100-AY-IOM-10009
IWOCS CHEMICAL JUMPER REEL CIU TO REEL	ALG-80102-00	IWOCS	D100-AY-IOM-10012

DESCRIPTION	PART NUMBER	PRODUCT GROUP	MANUAL REFERENCE NUMBER
IWOCS CHEMICAL JUMPER STT - CIU TO SURFACE TREE	ALG-80103-00	IWOCS	D100-AY-IOM-10012
STABPLATE - WO CONTROLS HYDRAULIC JUMPER 1 TO REEL	ALG-86100-00	IWOCS	D150-AY-PRC-10005
STABPLATE - WO CONTROLS HYDRAULIC JUMPER 2 TO WO REEL	ALG-86102-00	IWOCS	D150-AY-PRC-10005
STABPLATE - HYDRAULIC JUMPER 3 STT FIXED	ALG-86103-00	IWOCS	D150-AY-PRC-10005
IWOCS HYDRAULIC JUMPER REEL 2 - HPU TO W/O REEL	ALG-80108-00	IWOCS	D100-AY-IOM-10008
IWOCS HYDRAULIC JUMPER STT 2 - STT CONTROL PANEL TO STT	ALG-80109-00	IWOCS	D100-AY-IOM-10011
STABPLATE - HYDRAULIC JUMPER 3 STT CONTROL PANEL FIXED	ALG-80110-00	IWOCS	D150-AY-PRC-10005
SUBSEA TREE WO CONTROL UMBILICAL SHEAVE	ALG-84201-00	IWOCS	D150-AY-PRC-10005
SUBSEA TREE WO UMBILICAL TO RISER CLAMPS	ALG-84202-01	IWOCS	D150-AY-PRC-10005
DUAL THRT CONTROL UMBILICAL REEL C/W REEL STRUCTURE, DRUM & SURFACE JUNCTION BOX	ALG-81410-00	IWOCS	D150-AY-PRC-10005
DUAL THRT CONTROL UMBILICAL TO RISER CLAMPS	ALG-84212-00	IWOCS	D150-AY-PRC-10005
DUAL THRT CONTROLS UMBILICAL REEL REMOTE PANEL	ALG-81411-00	IWOCS	D150-AY-PRC-10005
SUBSEA TREE WO CONTROL UMBILICAL	ALG-84200-00	IWOCS	D150-AY-PRC-10005
THRT CONTROL UMBILICAL B	ALG-84210-00	IWOCS	D150-AY-IOM-10007
UMBILICAL REPAIR KIT	ALG-84299-00	IWOCS	D150-AY-PRC-10005
THRT CONTROL UMBILICAL A	ALG-84210-01	IWOCS	D150-AY-IOM-10007
SURFACE TEST TREE & SPIDER CONTROL PANEL	ALG-89100-00	IWOCS	D150-AY-IOM-10011
SUBSEA TREE WO CONTROL UMBILICAL SUBSEA END OUTBOARD STABPLATE (HFL)	ALG-86104-00	IWOCS	D150-AY-PRC-10005
SHORT TERM PROTECTIVE COVER FOR SUBSEA TREE WO CONTROL UMBILICAL SUBSEA END OUTBOARD STABPLATE	ALG-86204-00	IWOCS	D150-AY-PRC-10005
SUBSEA TREE WO CONTROL UMBILICAL SUBSEA END BEND RESTRICTOR	ALG-84204-00	IWOCS	D150-AY-PRC-10005
EMERGENCY DISCONNECT PACKAGE INBOARD STABPLATE (FOR WORKOVER CONTROLS UMBILICAL)	ALG-86105-00	IWOCS	D150-AY-PRC-10005
WORKOVER SUBSEA CONTROL MODULE (WSCM)	ALF-43001-00	IWOCS	D100-AJ-MAN-10001
WORKOVER SUBSEA CONTROL MDULE MOUNTING BASE (WSCMMB)	ALG-83800-00	IWOCS	D150-AY-PRC-10005
EFL - WSCM to SCM (EDP/LRP INTERFACE) CAPS A	726-31187-01	IWOCS	D150-AY-PRC-10005
EFL - WSCM to LRP P/T (EDP/LRP INTERFACE)	726-31185-01	IWOCS	D150-AY-PRC-10005
ELECTRICAL CONNECTOR PARKING POSITION, 4 WAY MALE	163-30079	IWOCS	D150-AY-PRC-10005

DESCRIPTION	PART NUMBER	PRODUCT GROUP	MANUAL REFERENCE NUMBER
ELECTRICAL CONNECTOR PARKING POSITION 7 WAY FEMALE	727-30338	IWOCS	D150-AY-PRC-10005
PROTECTIVE COVER FOR UMBILICAL INBOARD STABPLATE	ALG-86205-00	IWOCS	D150-AY-PRC-10005
EFL - UMBILICAL END CONNECITON TO WSCM, 4 WAY CAPS A	726-31182-01	IWOCS	D150-AY-PRC-10005
WSCM LIFTING ADAPTER	S97512	IWOCS	D150-AY-PRC-10005
WSCM PODLOCK SPANNER	921-30075	IWOCS	D150-AY-PRC-10005
EFL- WSCM to SCM (EDP/LRP INTERFACE) CAPS B	726-31187-02	IWOCS	D150-AY-PRC-10005
EFL- UMBILICAL END CONNECTION TO WSCM, 4 WAY CAPS B	726-31182-02	IWOCS	D150-AY-PRC-10005
LOWER RISER PACKAGE INBOARD STABPLATE (LRP TO SUBSEA TREE H/C + ANNULUS MONITOR JUMPER)	ALG-86600-03	IWOCS	D150-AY-PRC-10005
LOWER RISER PACKAGE PRODUCTION BORE PT A & B	842-30478-01	IWOCS	D150-AY-PRC-10005
EFL- LRP INBOARD DISCONNECTABLE STABPLATE TO LRP PRODUCTION BORE PT ELECTRICAL JUMPER	726-31186-01	IWOCS	D150-AY-PRC-10005
LOWER RISER PACKAGE INBOARD DISCONNECTABLE STABPLATE TO LRP BULKHEAD CONNECTOR ELECTRICAL JUMPER SCM: ETHERNET CAPS A	726-31183-01	IWOCS	D150-AY-PRC-10005
LOWER RISER PACKAGE TO SUBSEA TREE HFL JUMPER BUNDLE	ALG-86000-00	IWOCS	D100-AY-IOM-10015
LOWER RISER PACKAGE TO SUBSEA TREE ELECTRICAL JUMPER CAPS A	726-31184-01	IWOCS	D150-AY-PRC-10005
LOWER RISER PACKAGE INBOARD HYDRAULIC + CHEMICAL PARKING PLATE	ALG-86620-03	IWOCS	D150-AY-PRC-10005
LOWER RISER PACKAGE INBOARD ELECTRICAL CONENCTOR PARKING PLATE	163-30079	IWOCS	D150-AY-PRC-10005
LOWER RISER PACKAGE INBOARD DICONNECTABLE STABPLATE TO LRP BULKHEAD CONENCTOR ELECTRICAL JUMPER SCM: ETHERNET CAPS B	726-31183-02	IWOCS	D150-AY-PRC-10005
LOWER RISER PACKAGE TO SUBSEA TREE ELECTRICAL JUMPER CAPS B	726-31184-02	IWOCS	D150-AY-PRC-10005
TEST & FLUSHING HYDRAULIC POWER UNIT	S63200-00	IWOCS	D150-AY-PRC-10005
UNIVERSAL TEST STAND	ALF-63000-00	IWOCS	D150-AY-PRC-10005
TEST & FLUSHING PLATE	ALG-86110-00	IWOCS	D150-AY-PRC-10005
TEST & FLUSHING PLATE	ALG-86111-00	IWOCS	D150-AY-PRC-10005
TEST & FLUSHING PLATE	ALG-86112-00	IWOCS	D150-AY-PRC-10005
TEST & FLUSHING PLATE	ALG-86113-00	IWOCS	D150-AY-PRC-10005
TEST & FLUSHING PLATE	ALG-86114-00	IWOCS	D150-AY-PRC-10005
TEST & FLUSHING PLATE	ALG-86115-00	IWOCS	D150-AY-PRC-10005

DESCRIPTION	PART NUMBER	PRODUCT GROUP	MANUAL REFERENCE NUMBER
3/4" MALE UNIVERSAL MON COUPLERS	ALG-80115-00	IWOCS	D150-AY-PRC-10005
3/4" FEMALE UNIVERSAL MON COUPLERS	ALG-80116-00	IWOCS	D150-AY-PRC-10005
ELECTRICAL TEST CONNECTOR 7 WAY FEMALE FOR SCU FIXED HALF	ALG-86400-00	IWOCS	D150-AY-PRC-10005
ELCTRICAL TEST CONNECTOR 7 WAY MALE FOR REEL FIXED HALF	ALG-86400-01	IWOCS	D150-AY-PRC-10005
ELCTRICAL TEST CONNECTOR 7 WAY MALE FOR DECK JUMPER	ALG-86400-02	IWOCS	D150-AY-PRC-10005
ELCTRICAL TEST CONNECTOR 7 WAY FEMALE FOR DECK JUMPER	ALG-86400-03	IWOCS	D150-AY-PRC-10005
ELCTYRICAL TEST CONNECTOR MALE FOR LOADCELL DECK JUMPER	ALG-86400-04	IWOCS	D150-AY-PRC-10005
ELECTRICAL TEST CONENCTOR FEMALE FOR LOADCELL DECK JUMPER	ALG-86400-05	IWOCS	D150-AY-PRC-10005
12-ROV PLUG TEST CONNECTOR	727-30832	IWOCS	D150-AY-PRC-10005
12-ROV RECEPTACLE TEST CONNECTOR	727-30840	IWOCS	D150-AY-PRC-10005
4-WAY STAB PLUG DIVER TEST CONNECTOR	727-30634	IWOCS	D150-AY-PRC-10005
12-ROV RECEPTACLE TEST CONNECTOR	727-30253	IWOCS	D150-AY-PRC-10005
12-Way Stab Receptacle Test Connector	727-30369	IWOCS	D150-AY-PRC-10005
12-Way Diver Receptacle Test Connector	727-30353	IWOCS	D150-AY-PRC-10005
12-Way Stab Plug Test Conenctor	727-30352	IWOCS	D150-AY-PRC-10005
12-Way Ethernet Stab Aug Test Connector	727-30834	IWOCS	D150-AY-PRC-10005
Test & Flushing Plate	ALG-86104-01	IWOCS	D150-AY-IOM-10001
Test & Flushing Plate	ALG-86105-01	IWOCS	D150-AY-IOM-10001
SCMMB Test & Flushing Plate	S64102-016	IWOCS	D150-AJ-MAN-10039
Test & Flushing Plate	ALG-86680-03	IWOCS	D150-AY-IOM-10001
Test & Flushing Plate	ALG-86640-02	IWOCS	D150-AY-IOM-10001
12-WAY Ethernet ROV Receptable Test Connector	727-30838	IWOCS	D150-AY-PRC-10005
10M 41.7 MPa Test & Flushing Hose	ALG-80114-01	IWOCS	D150-AY-PRC-10005
10M 83.5 MPa Test & Flushing Hose	ALG-80114-02	IWOCS	D150-AY-PRC-10005
1/2" Male Mono Coupler 41.7 MPa	ALG-80114-03	IWOCS	D150-AY-PRC-10005
1/2" Female Mono Coupler 41.7 MPa With Male to Male Adaptor	ALG-80114-04	IWOCS	D150-AY-PRC-10005
3/8" Male Mono Coupler 83.5 MPa	ALG-80114-05	IWOCS	D150-AY-PRC-10005
3/8" Female Mono Coupler 83.5 MPa with Male to Male Adaptor	ALG-80114-06	IWOCS	D150-AY-PRC-10005
83.5 Mpa 3/8" MP Adaptor Male Mo Fitting to Male JIC 8	ALG-80114-07	IWOCS	D150-AY-PRC-10005
Nitrogen Pre-Charge Kit Inc Gas Booster Pump	S147138	IWOCS	D150-AY-PRC-10005

DESCRIPTION	PART NUMBER	PRODUCT GROUP	MANUAL REFERENCE NUMBER
Electrical Test Connector for TH Unbilical Flying Half	ALG-86400-06	IWOCS	D150-AY-PRC-10005
Elctrical Test Connector for TH Umbilical Landing String Fixed Half	ALG-86400-07	IWOCS	D150-AY-PRC-10005
Workshop Tool FLX 360 MQC Plate	S126002-00	IWOCS	D150-AY-PRC-10005
Shutdown Panel Cable	041-75014	IWOCS	D150-AY-PRC-10005
TH Eletrical Plug Connector Flying Half	ALG-84213-00	IWOCS	D150-AY-PRC-10005
TH Elctrical Connector Gel Kit	ALG-84215-00	IWOCS	D150-AY-PRC-10005
PT Sensor Simulator	842-30480-99	IWOCS	D150-AY-PRC-10005
Lower Riser Package to Subsea Tree Electrical Jumper Caps A 10m	726-31184-03	IWOCS	D150-AY-PRC-10005
Lower Riser Package to Subsea Tree Electrical Jumper Caps B 10m	726-31184-04	IWOCS	D150-AY-PRC-10005
Testdeck Harness SCU to WSCM 50m	ALG-80013-00	IWOCS	D100-AY-IOM-10014
EFL Protective Cap Set	ALG-41000-01	IWOCS	D150-AY-PRC-10005
Shutdown Panels Commissioning Kit	ALG-89000-293	IWOCS	D150-AY-PRC-10005
9/16" MP Female to Female Coupling	S153867	IWOCS	D150-AY-PRC-10005
9/16" MP Male Adaptor Fitting to Male JIC 8	S153869	IWOCS	D150-AY-PRC-10005
0 - 1200 bar Circular or Strip Chart Recorder + 25M, 1/4" x 862 barg Oversheathed Hose and Self Sealing Quick Connect Coupling	S113587-02	IWOCS	D150-AY-PRC-10005
0 - 1200 Bar Recorder Spare Charts	S113587-02	IWOCS	D150-AY-PRC-10005
0 - 690 bar Circular or Strip Chart Recorder + 25M, 1/4" x 862 barg Oversheathed Hose and Self Sealing Quick Connector Coupling	S113587-01	IWOCS	D150-AY-PRC-10005
0 - 690 bar Recorder Spare Charts	S113587-01	IWOCS	D150-AY-PRC-10005
Transportable Hydraulic Fluid Reservoir Tank, 300 Gal. (1,135 LITRE)	ALG-85500-00	IWOCS	D150-AY-PRC-10005
Hydraulic Fluid, 205L DRUM	082-30015	IWOCS	D150-AY-PRC-10005
Subsea Distribution Unit (SDU)		PCS	D100-AJ-MAN-10002
Subsea Distribution Unit	BDC-1A	PCS	ALF-40000-01
Subsea Distribution Unit	BDC-1B	PCS	ALF-40000-02
Subsea Distribution Unit	BDC-1C	PCS	ALF-40000-03
Subsea Distribution Unit	BDC-1D	PCS	ALF-40000-04
Subsea Distribution Unit	BDC-4	PCS	ALF-40000-05
Subsea Distribution Unit	BDC-5	PCS	ALF-40000-06
Elctrical Power Unit (EPU)	ALF-33400-00	PCS	D100-AJ-IOM-10013
Temporary Electrical Power Unit (EPU)	ALF-33400-01	PCS	D100-AJ-IOM-10013
Hydraulic Power Unit (HPU)	ALF-35000-00	PCS	D150-AJ-IOM-10023

DESCRIPTION	PART NUMBER	PRODUCT GROUP	MANUAL REFERENCE NUMBER
Master Control Station (MCS) - Part of Subsea Control Unit (SCU)	ALF-33000-00	PCS	D100-AJ-IOM-10007 D100-AJ-IOM-10008
Topside Umbilical Termination Unit (TUTU) includes - 1-off hydraulic panel, 2-off electrical junction box, 1-off optical junction box	ALF-36000-01 & -02	PCS	D100-AJ-IOM-10019
RBCS Subsea Power and Communications Unit (RB SPCU) - part of SCU	ALF-33401-00	PCS	D100-AJ-IOM-10015
Temporary RBCS Subsea Power and Communications Unit (RB SPCU) – part of SCU	ALF-33401-01	PCS	D100-AJ-IOM-10015
PCIU Shipping Frame	ALF-71000-00	PCS	D150-AJ-IOM-10027
SSIV Electrical Power Unit	ALF-33700-00	PCS	D150-AJ-MAN-10037
SDH Crossover Plate - Fixed half (set)	ALF-46600-06 & -07	PCS	D141-AY-IOM-10001
SDH Crossover Plate - Free half (set)	ALF-46670-06 & -07	PCS	D141-AY-IOM-10001
RB Supply Stabplate - SDH Mounted	ALF-46600-05	PCS	D141-AY-IOM-10001
RB Stabplate long term protective cover	ALF-46630-04	PCS	D141-AY-IOM-10001
Electrical Flying Lead (EFL) - Sensor - RB SCM to SDH Bulkhead Connector	726-31203-01 to-10	PCS	D100-AJ-MAN-10007
Optical Flying Lead (OFL) - Comms - MBH Type 1 to MBH Type 2	ALF-41501-01 to-12	PCS	D150-AJ-IOM-10026
Electrical Flying Lead (EFL) - DSL Power & Comms - RB SCM Supply	726-31205-01 to-04	PCS	D100-AJ-MAN-10007
Electrical Flying Lead (EFL) - Power - MBH Type 1 to MBH Type 2	726-31207-01 to-06	PCS	D100-AJ-MAN-10007
Subsea Control Module (SCM) - Variant 1 , SDH Configuration	ALF-43001-00	PCS	D100-AJ-MAN-10001
SDH SCM Mounting Base (SCMMB)	ALF-45000-03	PCS	D150-AJ-PRC-10041
Electrical Connectors - MBH type 1 - Production Power and RB Power & Comms (set)	ALF-46400-00	PCS	D141-AY-IOM-10001 D150-AJ-MAN-10022
Optical Connectors - MBH type 1 - Production Comms (set)	ALF-46401-00	PCS	D141-AY-IOM-10001 D150-AJ-MAN-10022
Electrical Connectors - MBH type 2 - Production Power (set)	ALF-46402-00	PCS	D141-AY-IOM-10001 D150-AJ-MAN-10022
Optical Connectors - MBH type 2 - Production Comms (set)	ALF-46403-00	PCS	D141-AY-IOM-10001 D150-AJ-MAN-10022
Electrical Parking Positions - MBH type 1 end (set)	ALF-46410-00	PCS	D141-AY-IOM-10001
Electrical Parking Positions - MBH type 2 end (set)	ALF-46412-00	PCS	D141-AY-IOM-10001
Electrical Parking Positions - RB SCM retrieval (set)	ALF-46414-00	PCS	D141-AY-IOM-10001
Electrical Parking Positions - SDH for RB supply, FLT Connector End (set)	ALF-46415-00	PCS	D141-AY-IOM-10001

DESCRIPTION	PART NUMBER	PRODUCT GROUP	MANUAL REFERENCE NUMBER
Optical Parking Positions - MBH type 1 end (set)	ALF-46411-00	PCS	D141-AY-IOM-10001
Optical Parking Positions - MBH type 2 end (set)	ALF-46413-00	PCS	D141-AY-IOM-10001
Hydraulic Consolidation Module - Fixed plate SDH mounted	ALF-46600-08	PCS	D141-AY-IOM-10001
Hydraulic Consolidation Module - Flying Plate	ALF-46650-01	PCS	D141-AY-IOM-10001
Hydraulic Parking Places - for RB supply STFL - SDH Mounted	ALF-46620-04	PCS	D141-AY-IOM-10001
Electrical Flying Lead (EFL) - Sensor - SDH FLT Bulkhead Connector to FLT	726-31281-01 to -10	PCS	D141-AY-IOM-10001
Electrical Bulkhead Connector and Parking Covers - SDH for RB Supply (Cap for 12 way Plug)	163-30075	PCS	D100-AJ-MAN-10007
Electrical Parking Positions - SDH for RB supply, B/H Connector End	727-30338	PCS	D141-AY-IOM-10001
RB Supply Stabplate Parking Positions Long Term Protective Cover	ALF-44630-00	PCS	TBC
Electro-Hydraulic Consolidation Module	ALF-46655-01	PCS	D150-AJ-MAN-10036
Electrical Flying Lead (EFL) – 3 LEG – 1 in and 2 out	726-31287-01 & -02	PCS	D100-AJ-MAN-10007
Electrical Flying Lead (EFL) – 4 LEG – 1 in and 3 out	726-31288-01 & -02	PCS	D100-AJ-MAN-10007
Electrical Parking Positions for MBH ON SDH	727-30337	PCS	D100-AJ-MAN-10007
Electrical Parking Positions for EHCM on SDH	727-30737	PCS	D150-AJ-MAN-10036
Protective Cap for Receptacle end of EFL (Item 2.29 and 2.30)	163-30076	PCS	D100-AJ-MAN-10007
Protective Cap for Plug end of EFL (Item 2.29 and 2.30)	163-30111	PCS	D100-AJ-MAN-10007
Protective Cap for MQC Face of EHCM	S163864	PCS	D150-AJ-MAN-10036
Hydraulic & Chemical Distribution Module (HCDM) - SDU Mounted	ALF-44300-00	PCS	D100-AJ-IOM-10005
HCDM Mounting Base	ALF-44350-00	PCS	D100-AJ-MAN-10002
Electrical Flying Lead (EFL) - Power - UTA Type 1, 3 to PCIU	726-31207-07 &-08 726-31207-11 &-12	PCS PCS	D100-AJ-MAN-10002 D100-AJ-MAN-10002
Electrical Flying Lead (EFL) - Power - UTA Type 1 to UTA Type 2	726-31207-09 &-10	PCS	D100-AJ-MAN-10002
Optical Flying Lead (OFL) - Comms - UTA Type 1, 3 to PCIU	ALF-41503-01 to-04 ALF-41503-05 to-08	PCS PCS	D100-AJ-MAN-10002 D100-AJ-MAN-10002
Optical Flying Lead (OFL) - Comms - UTA Type 1 to UTA Type 2	ALF-41502-01 & -02	PCS	D100-AJ-MAN-10002
Electrical Flying Lead (EFL) - DSL Power & Comms - PCIU to MDM FL Supply	726-31207-13 & -14	PCS	D100-AJ-MAN-10002

DESCRIPTION	PART NUMBER	PRODUCT GROUP	MANUAL REFERENCE NUMBER
Electrical Flying Lead (EFL) - Ethernet LAN - PCIU to PCIU Power and Comms Link	726-31206-11 & -12	PCS	D100-AJ-MAN-10002
E/H Flying Lead Stabplate - MEG Manifold Supply - SDU End (FLT Type 2B)	ALF-41355-19	PCS	D150-AJ-IOM-10014
Power & Comms Interface Unit (PCIU)	ALF-43700-00	PCS	D100-AJ-IOM-10004
PCIU Location Structure and Mounting Base	ALF-44400-00	PCS	D100-AJ-MAN-10002
Pre-Formed Steel Tubed Flying Lead (STFL) - UTA Type 1, 3 to HCDM	ALF-41350-02	PCS	D150-AJ-IOM-10010
Pre-Formed Steel Tubed Flying Lead (STFL) - UTA Type 1 to UTA Type 2	ALF-41350-01	PCS	D150-AJ-IOM-10010
UTA - BDC1A	ALF-40100-01	PCS	D150-AJ-IOM-10007
- BDC1C	ALF-40100-03	PCS	D150-AJ-IOM-10007
- BDC1D	ALF-40100-04	PCS	D150-AJ-IOM-10007
- BDC1A	ALF-44001-01	PCS	D150-AJ-IOM-10007
- BDC1C	ALF-44001-03	PCS	D150-AJ-IOM-10007
- BDC1D	ALF-44001-02	PCS	D150-AJ-IOM-10007
- BDC1A	ALF-44002-01	PCS	D150-AJ-IOM-10007
- BDC1C	ALF-44002-03	PCS	D150-AJ-IOM-10007
- BDC1D	ALF-44002-02	PCS	D150-AJ-IOM-10007
- BDC1B	ALF-44003-01	PCS	D150-AJ-IOM-10007
- BDC4	ALF-44003-02	PCS	D150-AJ-IOM-10007
- BDC5	ALF-44003-03	PCS	D150-AJ-IOM-10007
- UTA Type 1 - BDC1A & BDC1D	ALF-44050-03	PCS	D150-AJ-IOM-10007
- UTA Type 1 - BDC1A	ALF-44050-01	PCS	D150-AJ-IOM-10007
UTA Mounting Base – UTA Type 4	ALF-44050-04	PCS	D150-AJ-IOM-10007
- UTA Type 2 - BDC1A & BDC1D	ALF-44050-05	PCS	D150-AJ-IOM-10007
- UTA Type 2 - BDC1C	ALF-44050-06	PCS	D150-AJ-IOM-10007
- UTA Type 3 - BDC1B	ALF-44050-07	PCS	D150-AJ-IOM-10007
- UTA Type 3 - BDC4 & BDC5	ALF-44050-08	PCS	D150-AJ-IOM-10007
Electrical Parking Positions - UTA Type 1 EFLs (set)	ALF-46416-00	PCS	D100-AJ-MAN-10002
Electrical Parking Positions - UTA Type 2 EFLs (set)	ALF-46417-00	PCS	D100-AJ-MAN-10002
Electrical Parking Positions - UTA Type 3 EFLs (set)	ALF-46418-00	PCS	D100-AJ-MAN-10002
Electrical Parking Positions - PCIU (set)	ALF-46408-00	PCS	D100-AJ-MAN-10002
Optical Parking Positions - UTA Type 1 OFLs (set)	ALF-46419-00	PCS	D100-AJ-MAN-10002
Optical Parking Positions - UTA Type 2 OFLs (set)	ALF-46420-00	PCS	D100-AJ-MAN-10002
Optical Parking Positions - UTA Type 3 OFLs (set)	ALF-46421-00	PCS	D100-AJ-MAN-10002
- For Tree Ouput	ALF-46620-01	PCS	D100-AJ-MAN-10002
- For Manifold Output	ALF-46620-03	PCS	D141-AY-IOM-10000

DESCRIPTION	PART NUMBER	PRODUCT GROUP	MANUAL REFERENCE NUMBER
- For Spare Ouput	ALF-46620-13	PCS	D100-AJ-MAN-10002
- For MDM Ouput	ALF-46620-19	PCS	D100-AJ-MAN-10002
- BDC1B	ALF-40100-02	PCS	D100-AJ-MAN-10002
- BCD4	ALF-40100-05	PCS	D100-AJ-MAN-10002
- BCD5	ALF-40100-06	PCS	D100-AJ-MAN-10002
Electrical Parking Positions - MDM FLT	ALF-46409-00	PCS	D100-AJ-MAN-10007
Electrical Parking Positions - Pre-Deployed EFLs	ALF-46433-00	PCS	D100-AJ-MAN-10007
Optical Parking Positions - PCIU	ALF-46429-00	PCS	D100-AJ-MAN-10007
Electrical Parking Covers (Cap For 4 Way Plug)	163-30109	PCS	D100-AJ-MAN-10007
Electrical Parking Covers - SDU BDC1D (Cap for 4 way Receptacle)	163-30180	PCS	D100-AJ-MAN-10007
Electrical Parking Covers - SDU BDC1D (Cap for 12 way Receptacle)	163-30232	PCS	D100-AJ-MAN-10007
Optical Parking Covers - SDU BDC1D (Cap for 8 way Fibre Optic Connector)	785-30020-01	PCS	D100-AJ-MAN-10007
Earthing Harnesses (UTA TO HOST Structure) - BDC1A	726-31092-01	PCS	D100-AJ-MAN-10007
Earthing Harnesses (UTA TO HOST Structure) - BDC1B	726-31092-02	PCS	D100-AJ-MAN-10007
Earthing Harnesses (UTA TO HOST Structure) - BDC1C	726-31092-02	PCS	D100-AJ-MAN-10007
Earthing Harnesses (UTA TO HOST Structure) - BDC1D	726-31092-02	PCS	D100-AJ-MAN-10007
Earthing Harnesses (UTA TO HOST Structure) - BDC4	726-31092-02	PCS	D100-AJ-MAN-10007
Earthing Harnesses (UTA TO HOST Structure) - BDC5	726-31092-02	PCS	D100-AJ-MAN-10007
Electrical Parking Positions (PCIU & UTA Earthing Harnesses) - BDC1A	727-30337	PCS	D100-AJ-MAN-10007
Electrical Parking Positions (PCIU & UTA Earthing Harnesses) - BDC1B	727-30337	PCS	D100-AJ-MAN-10007
Electrical Parking Positions (PCIU & UTA Earthing Harnesses) - BDC1C	727-30337	PCS	D100-AJ-MAN-10007
Electrical Parking Positions (PCIU & UTA Earthing Harnesses) - BDC1D	727-30337	PCS	D100-AJ-MAN-10007
Electrical Parking Positions (PCIU & UTA Earthing Harnesses) - BDC4	727-30337	PCS	D100-AJ-MAN-10007
Electrical Parking Positions (PCIU & UTA Earthing Harnesses) - BDC5	727-30337	PCS	D100-AJ-MAN-10007
Earthing Harnesses (PCIU to HOST Structure)	726-31092-03	PCS	D100-AJ-MAN-10007
HYDRAULIC PARKING PLACES LTPC FOR XT OUTPUT	ALF-46630-01	PCS	D100-AJ-PRC-10004
XT BRIDGING PLATE PARKING POSITION LTPC	ALF-46630-02	PCS	D100-AJ-PRC-10004
HYDRAULIC PARKING PLACES LTPC FOR MANIFOLD OUTPUT	ALF-46630-03	PCS	D141-AY-IOM-10000
HYDRAULIC PARKING PLACES LTPC FOR SPARE OUTPUT	ALF-46630-13	PCS	D100-AJ-PRC-10004

DESCRIPTION	PART NUMBER	PRODUCT GROUP	MANUAL REFERENCE NUMBER
HYDRAULIC PARKING PLACES LTPC FOR MDM OUTPUT	ALF-46630-19	PCS	D100-AJ-PRC-10004
HYDRAULIC PARKING PLACES LTPC – UTA EARTH CONNECTOR	727-30990	PCS	D100-AJ-MAN-10007
HYDRAULIC PARKING PLACES LTPC – PROTECTIVE COVER FOR UTA EARTH CONNECTOR	163-30109	PCS	D100-AJ-MAN-10007
STFL Stabplate – Manifold Supply – Manifold End (FLT Type 1B)	ALF-41355-07	PCS	D150-AJ-IOM-10014
STFL Stabplate – Manifold Supply – SDU End (FLT Type 1B)	ALF-41355-03	PCS	D150-AJ-IOM-10014
Electrical Flying Lead (EFL) – Ethernet LAN – Manifold Supply	726-31206-09 & -10	PCS	D100-AJ-MAN-10002
Dual P&T Sensor Assembly (includes 2 off sensors) (Marshalling Assembly Type 4)	726-31190-03 & -04	PCS	D141-AY-IOM-10000
Manifold Supply Stabplate	ALF-46600-03	PCS	D141-AY-IOM-10000
Electrical Harness Assembly – CCV (Marshalling Assembly Type 3)	726-31198-01	PCS	D110-AY-IOM-10003
Electrical Harness Assembly – VPI (Marshalling Assembly Type 5)	726-31197-01 & -02	PCS	D110-AY-IOM-10003
Subsea Control Module (SCM) – Variant 1, Manifold Configuration	ALF-43001-00	PCS	D100-AJ-MAN-10001
SCM Mounting Base (SCMMB)	ALF-45000-01	PCS	D150-AJ-PRC-10041
Chemical Control Valve (CCV) – WI	ALF-49600-00	PCS	D150-AJ-IOM-10003
Dummy CCV – WI	ALF-49610-00	PCS	D150-AJ-IOM-10019
CCV docking receptacle	ALF-45900-00	PCS	D150-AJ-IOM-10018
Electrical Parking Positions – SCM Supply (set)	ALF-46422-00	PCS	D100-AJ-MAN-10007
Electrical Parking Positions – CCV Supply (set)	ALF-46423-00	PCS	D100-AJ-MAN-10007
Manifold Supply Stabplate long term protective cover	ALF-46630-03	PCS	D141-AY-IOM-10000
Manifold Supply Stabplate parking position	ALF-46620-03	PCS	D141-AY-IOM-10000
Electrical Parking Covers – Manifold E7 & E8 Parking (Cap for 12 way Receptacle)	163-30232	PCS	D100-AJ-MAN-10007
Electrical Parking Covers – Manifold E12 Parking (Cap for 4 way Plug)	163-30109	PCS	D100-AJ-MAN-10007
MANIFOLD SUPPLY STABPLATE PARKING POSITION LTPC	ALF-46630-03	PCS	D141-AY-IOM-10000
STFL Stabplate – Tree Supply – Tree End (FLT Type 1A)	ALF-41355-02	PCS	D150-AJ-IOM-10014
STFL Stabplate – Tree Supply – SDU End (FLT Type 1A)	ALF-41355-01	PCS	D150-AJ-IOM-10014
Electrical Flying Lead (EFL) – Ethernet LAN – Tree 1 & 2 Supply	726-31206-01 to -04	PCS	D110-AY-IOM-10003

DESCRIPTION	PART NUMBER	PRODUCT GROUP	MANUAL REFERENCE NUMBER
Electrical Flying Lead (EFL) – Ethernet LAN – Tree 3 & 4 Supply	726-31206-05 to -08	PCS	D110-AY-IOM-10003
Acoustic Sand Detector (ASD) includes funnel and harness	842-30362-15 842-30364-18	PCS PCS	D100-AJ-PRC-10002 D100-AJ-PRC-10002
Dual P&T Sensor Assembly – Tree APT/UPT – (includes 2 off sensors) (Marshalling Assembly Type 4)	726-31190-01 & -02	PCS	D110-AY-IOM-10007
Tree Bridging Flying Stabplate	ALF-46670-02	PCS	D110-AY-IOM-10003
Electrical Harness Assembly – Flow Control Module (including 3 sensors) – 2 x P&Ts, IEM, PCVPI, ASD (Marshalling Assembly Type 2)	726-31191-01	PCS	D110-AY-IOM-10003
Electrical Harness Assembly – Tree – LDHI CCV	726-31194-01	PCS	D110-AY-IOM-10003
Chemical Control Valve (CCV) – LDHI	ALF-49601-00	PCS	D150-AJ-IOM-10003
Dummy CCV – LDHI	ALF-49611-00	PCS	D150-AJ-IOM-10019
CCV Docking Receptacle	ALF-45901-00	PCS	D150-AJ-IOM-10018
Subsea Control Module (SCM) Variant 2	ALF-43000-00	PCS	D100-AJ-MAN-10001
SCM Mounting Base (SCMMB)	ALF-45000-00	PCS	D150-AJ-PRC-10041
MEG Injection Chemical Control Valve (including mounting funnel) – High flow	ALF-49602-00	PCS	D150-AJ-IOM-10003
Tree Supply Stabplate	ALF-46600-01	PCS	D110-AY-IOM-10003
Tree Supply Stabplate Long Term Protective Cover	ALF-46630-01	PCS	D110-AY-IOM-10003
Tree Supply Stabplate Parking Position	ALF-46620-01	PCS	D110-AY-IOM-10003
Workover Stabplate (Tree Bridging Fixed Stabplate)	ALF-46600-02	PCS	D110-AY-IOM-10003
Tree Bridging Plate Parking Position	ALF-46620-02	PCS	D110-AY-IOM-10003
Wet Gas Flowmeter (WGFM)	ALF-42410-01	PCS	D100-AJ-PRC-10053 D150-AJ-MAN-10002
MEG CCV Docking Receptacle	ALF-45902-00	PCS	D150-AJ-IOM-10018
Subsea Acoustic Data Logger	S136147	PCS	D150-AJ-IOM-10021 D150-AJ-IOM-10029
Surface Acoustic Data Logger Receiver	S128501	PCS	D150-AJ-IOM-10021
MDM STFL Stabplate – UTA Type 4 (FLT Type 1B)	ALF-41355-04	PCS	D150-AJ-IOM-10014
MDM STFL Stabplate – MDM Ends (FLT Type 1B)	ALF-41355-08	PCS	D150-AJ-IOM-10014
MDM Umbilical Termination Assembly (UTA Type 4)	ALF-44004-01	PCS	D150-AJ-IOM-10007
UTA Mounting Base – UTA Type 4	ALF-44050-10	PCS	D150-AJ-IOM-10007
Electrical Flying Lead (EFL) – DSL Power & Comms – UTA type 4 to MDM SCM	726-31205-05 & -06	PCS	D100-AJ-MAN-10001
Subsea Control Module (SCM) – Variant 1, MDM Configuration	ALF-43001-00	PCS	D100-AJ-MAN-10001
SCM Mounting Base (SCMMB)	ALF-45000-02	PCS	D150-AJ-PRC-10041

DESCRIPTION	PART NUMBER	PRODUCT GROUP	MANUAL REFERENCE NUMBER
Electrical Parking Positions – MDM supply UTA end (set)	ALF-46431-00	PCS	D100-AJ-MAN-10002
Manifold Supply Stabplate long term protective cover	ALF-46630-04	PCS	D141-AY-IOM-10000
Manifold Supply Stabplate Parking Position (Manifold Mounted)	ALF-46620-04	PCS	D141-AY-IOM-10000
UTA Foundation Structure	ALF-45210-00	PCS	D150-AJ-IOM-10007
Manifold Supply Stabplate Parking Position (UTA Type 4 Mounting Base mounted)	ALF-46620-04	PCS	D141-AY-IOM-10000
Electrical Parking Covers – MEG Manifold E7 & E8 Parking (Cap for 12 way Receptacle)	724-30037	PCS	D141-AY-IOM-10000
E/H Flying Lead Stabplate – GEP RB Supply – GEPRB End (FLT Type 2A)	ALF-41355-09	PCS	D150-AJ-IOM-10014
GEPRB Supply Stabplate	ALF-46600-05	PCS	D150-AJ-IOM-10011 D100-AJ-PRC-10004
GEPRB Supply Stabplate long term Protective Cover	ALF-46630-04	PCS	D150-AJ-IOM-10011 D100-AJ-PRC-10004
GEPRB Supply Stabplate Parking Position	ALF-46620-04	PCS	D150-AJ-IOM-10011 D100-AJ-PRC-10004
E/H Flying Lead Stabplate – GEP RB Supply – SDH End (FLT Type 2A)	ALF-41355-10	PCS	D150-AJ-IOM-10014
GEPRB Mounted Fixed Half Bulkhead Plate including Monocoupler	ALF-41350-05	PCS	D150-AJ-IOM-10020
Monocoupler Semi Rigid Jumper – SSIV Control Line	ALF-41350-03	PCS	D150-AJ-IOM-10020
Actuator Mounted Fixed Half Bulkhead Plate including Monocoupler	ALF-41350-04	PCS	D150-AJ-IOM-10020
Electrical Bulkhead Connector Covers – E1 & E2 Bulkhead Connectors and SRJ Actuator End (Full LTPC for 12 way Receptacle)	724-30037	PCS	D150-AJ-MAN-10022
PRB Mounted Fixed Half Bulkhead Plate including Monocoupler	ALF-41350-05	PCS	D150-AJ-ION-10020
Monocoupler Semi Rigid Jumper – SSIV Control Line	ALF-41350-03	PCS	D150-AJ-ION-10020
Monocoupler long term Protective Cover	S147541	PCS	D150-AJ-ION-10020
Male Monocoupler (Test & Flushing)	S147542	PCS	D150-AJ-ION-10020
Female Monocoupler (Test & Flushig)	S147544	PCS	D150-AJ-ION-10020
Electrical Connectors - Free issue for Actuator Harnesses	724-30222	PCS	D150-AJ-ION-10020
Actuator Mounted Fixed Half Bulkhead Plate including Monocoupler	ALF-41350-04	PCS	D150-AJ-ION-10020
Commissioning/Installation MQC Plate	ALF-46660-01	PCS	D150-AJ-IOM-10011 D100-AJ-PRC-10004

DESCRIPTION	PART NUMBER	PRODUCT GROUP	MANUAL REFERENCE NUMBER
SSIV Semi Rigid Jumper Deployment Equipment	ALF-72100-00	PCS	D150-AJ-IOM-10020
ASD Simulator	815-30032	PCS	D150-AJ-MAN-10004
CCV Simulator - Low Flow (WI)	ALF-49600-99	PCS	D150-AJ-IOM-10004
MEG CCV Test and Flushing Dummy	ALF-49612-00	PCS	D150-AJ-IOM-10019
Electrical Umbilical Simulator	ALF-65300-00	PCS	D150-AJ-IOM-10025
Flying Configurable Test Plate - Trees/SIT	ALF-46680-01	PCS	D110-AY-IOM-10003
Hydraulic Umbilical Simulator	ALF-65301-00	PCS	D150-AJ-IOM-10017
MCS reference Rack	ALF-33002-00	PCS	D100-AJ-IOM-10009
SCM Test Stand including shipping frame	ALF-63000-00	PCS	D150-AJ-IOM-10024
SCMMB Test & Flushing Plate	S64102-016	PCS	D150-AJ-MAN-10039
Test and Flushing HPU (TFHPU)	ALF-63200-00	PCS	D100-AJ-IOM-10018
Subsea Electrical & Optical Test Connectors including shorting links	ALF-66000-07	PCS	D150-AJ-MAN-10022
Electrical Test Connectors & Cables – Production Manifold (set)	ALF-66000-02	PCS	D150-AJ-MAN-10022
Electrical Test Connectors & Cables – MEG Distribution Manifold (set)	ALF-66000-03	PCS	D141-AY-IOM-10000
Electrical Test Connectors & Cables – RB (set)	ALF-66000-05	PCS	D150-AJ-MAN-10022
Electrical & Optical Test Connectors & Cables – SDH (set)	ALF-66000-04	PCS	D150-AJ-MAN-10022
Electrical Test Connectors & Cables – Tree (set)	ALF-66000-01	PCS	D150-AJ-MAN-10022
Electrical & Optical Test Connectors & Cables – Umbilical Supplier, MBH, UTA & FLT (set)	ALF-66000-06	PCS	D150-AJ-MAN-10022
CCV Simulator – High Flow (LDHI)	ALF-49601-99	PCS	D150-AJ-IOM-10004
CCV Simulator – High Flow (LP MEG)	ALF-49602-99	PCS	D150-AJ-IOM-10004
4-WAY ELECTRICAL TEST ADAPTER + ELECTRICAL LEADS	727-30254	PCS	D100-AJ-MAN-10007
4-WAY ELECTRICAL TEST CONNECTOR FOR EHCM – HYPERBARIC TESTING	726-30936-01	PCS	D150-AJ-MAN-10036
EHCM TEST ADAPTER PLATE	ALF-63900-00	PCS	D150-AJ-MAN-10036
Electrical Harness Assembly – Flow Control Module – MEG High Flow CCV	726-31192-01	PCS	D100-AJ-MAN-10007
Electrical Connector with Loops Dummy Cover	724-30223	PCS	D100-AJ-MAN-10007
Digital Sensor Simulator – Canbus	VPI Simulators supplied by URF	PCS	D150-AJ-IOM-10004
Digital Sensor Simulator – Modbus	VPI Simulators supplied by URF	PCS	D150-AJ-IOM-10004
FO Simulator	TBC	PCS	D150-AJ-IOM-10004

DESCRIPTION	PART NUMBER	PRODUCT GROUP	MANUAL REFERENCE NUMBER
- MBH Type 1 , UTA Type 1, 3 & 4 Electrical	TBC	PCS	D141-AY-IOM-10001 & D150-AJ-MAN-10022
Electrical Parking Positions – SCM Supply (set)	ALF-46425-00	PCS	D100-AJ-MAN-10007
Electrical Parking Positions – SCM Outputs & Instruments (set)	ALF-46426-00	PCS	D100-AJ-MAN-10007
Electrical Flying Lead (Ethernet) – WGFM	726-31193-01	PCS	D100-AJ-MAN-10007
Electrical Parking Position – MEG CCV	ALF-46404-00	PCS	D100-AJ-MAN-10007
Electrical Parking Position – ASD	ALF-46405-00	PCS	D100-AJ-MAN-10007
Electrical Harness – DHPT Gauge	726-31195-01	PCS	D100-AJ-MAN-10007
Electrical Flying Lead – SADL to XT	726-31196-01	PCS	D100-AJ-MAN-10007
Electrical Bulkhead Connector and Parking Covers – E7 & E8 Parking (Cap for 12 way Receptacle)	163-30232	PCS	D100-AJ-MAN-10007
MDM Supply Stabplate	ALF-46600-04	PCS	D100-AJ-PRC-10004
Electrical Harness Assembly – VPI (Marshalling Assembly Type 10)	726-31199-01 & -02	PCS	D100-AJ-MAN-10007
Electrical Parking Positions – SCM Supply (set)	ALF-46430-00	PCS	D100-AJ-MAN-10007
Earthing Harnesses – UTA to host structure	726-31092-01	PCS	D100-AJ-MAN-10007
Electrical Parking Positions – UTA Earthing Harnesses	727-30337	PCS	D100-AJ-MAN-10007
GEPRB Module 1 – Dual P&T Sensor and VPI Assembly (including 2 sensors) (Marshalling Assembly Type 9)	726-31200-01 & 02	PCS	D100-AJ-MAN-10007
GEPRB Module 3 – Dual P&T Sensor and Harness Assembly (including 1 sensor)	726-31204-01 & 02	PCS	D100-AJ-MAN-10007
GEPRB Module 2 – Dual P&T Sensor and VPI Assembly (including 2 sensors) (Marshalling Assembly Type 8)	726-31201-01 & 02	PCS	D100-AJ-MAN-10007
Electrical Parking Positions – GEPRB, FLT Connector End (set)	ALF-46428-00	PCS	D100-AJ-MAN-10007
GEPRB Module 3 – Electrical Connector with Termination Resistors Dummy Cover	724-30224	PCS	D100-AJ-MAN-10007
Electrical Flying Lead (EFL) – Sensor Power & Comms – FLT to GEPRB	726-31281-11 to 14	PCS	D100-AJ-MAN-10007
Electrical Flying Lead (EFL) – Sensor Power & Comms – GEPRB Module 2 to GEPRB Module 3	726-31286-01 & -02	PCS	D100-AJ-MAN-10007
Electrical Flying Lead (EFL) – VPI Power & Comms – Valve Bulkhead Plate to Valve Actuator Assembly	726-31280-01 & -02	PCS	D100-AJ-MAN-10007
E/H Flying Lead Stabplate – PRB Supply – PRB End (FLT Type 2A)	ALF-41355-06	PCS	D150-AJ-IOM-10014
E/H Flying Lead Stabplate – PRB Supply – SDH End (FLT Type 2A)	ALF-41355-05	PCS	D150-AJ-IOM-10014

DESCRIPTION	PART NUMBER	PRODUCT GROUP	MANUAL REFERENCE NUMBER
PRB – Dual P&T Sensor and VPI Assembly (including 4 sensors) (Marshalling Assembly Type 7)	726-31202-01 to 06	PCS	D100-AJ-MAN-10007
PRB Supply Stabplate	ALF-46600-05	PCS	D150-AJ-IOM-10011 D100-AJ-PRC-10004
PRB Supply Stabplate long term protective cover	ALF-46630-04	PCS	D150-AJ-IOM-10011 D100-AJ-PRC-10004
PRB Supply Stabplate parking position	ALF-46620-04	PCS	D150-AJ-IOM-10011 D100-AJ-PRC-10004
Electrical Parking Positions – PRB, FLT Connector End (set)	ALF-46427-00	PCS	D100-AJ-MAN-10007
Electrical Parking Positions – PRB, B/H Connector End	163-30079	PCS	D150-AY-PRC-10005
Electrical Flying Lead (EFL) – Sensor Power & Comms – FLT to PRB	726-31281-15 & -16	PCS	D100-AJ-MAN-10007
SCM Shipping Frame including Sling Set	818-30000-00	PCS	D100-AJ-MAN-10008
Electrical Test Unit (ETU)	ALF-65000-00	PCS	D150-AJ-IOM-10002
Fixed Configurable Test Plate – STFL	ALF-46640-01	PCS	D150-AJ-IOM-10011 D100-AJ-PRC-10004
Flying Configurable Test Plate – Manifolds	ALF-46680-02	PCS	D150-AJ-IOM-10011
Flying Configurable Test Plate – SDH	ALF-46680-03	PCS	D150-AJ-IOM-10011
Flying Configurable Test Plate – HCDM	ALF-46680-04	PCS	D150-AJ-IOM-10011
Flying Configurable Test Plate – UTA manufacturer	ALF-46680-05	PCS	D150-AJ-IOM-10011
Flying Configurable Test Plate – Umbilical manufacturer	ALF-46680-05	PCS	D150-AJ-IOM-10011
Flying Configurable Test Plate – GEPRB & PRB	ALF-46680-06	PCS	D150-AJ-IOM-10011
Flying Configurable Test Plate – MEG Manifold	ALF-46680-06	PCS	D150-AJ-IOM-10011
WGM Simulator and Software	ALF-42410-99	PCS	D100-AJ-MAN-10009
ICSS PCS Node reference Rack	ALF-33003-00	PCS	D100-AY-MAN-10005
MOCK FLT-30 DEG	ALF-41355-20	PCS	D150-AJ-IOM-10014
MOCK FLT-0 DEG	ALF-41355-21	PCS	D150-AJ-IOM-10014
OPTICAL TEST CONNECTOR LOOPED FOR SUBSEA UMBILICAL COMMISIONING	786-30041	PCS	D150-AJ-MAN-10022
ROV DUMMY RECEPTACLE 4 WAY WITH LINKS PINS 1 TO 2, PINS 3 TO 4	724-30096	PCS	D100-AJ-MAN-10007
Secondary Release Tools – Hydraulic Ram Secondary Release Pin	S99304	PCS	D150-AJ-MAN-10042
Walther ROV Connectors	S126970-S126972, S127474, S127477, S127488-S127490, S127494, S131142	PCS	D150-AJ-MAN-10035 D150-AJ-IOM-10028

DESCRIPTION	PART NUMBER	PRODUCT GROUP	MANUAL REFERENCE NUMBER
PW VX Subsea Flowmeter	ALF-42410-01	PCS	D150-AJ-MAN-10040 D150-AJ-MAN-10013 D150-AJ-MAN-10001
XT DEPLOYMENT PLATE	ALF-46690-01	PCS	D150-AJ-MAN-10031
SPS MCS Cabinet 1 to 5	ALF-33000-00	PCS	D150-AJ-IOM-10015
RS-485 FW DUAL PRESSURE & TEMPERATURE SENSORS	TBC	PCS	D150-AJ-MAN-10011
Intrusive Erosion Monitor (IEM)	842-30483-01	PCS	D150-AJ-MAN-10000
DUAL PRESSURE AND TEMPERATURE SENSOR FW MANUAL FOR CAN CIA 443 V0201	TBC	PCS	D150-AJ-MAN-10027
EHCM Test Adapter Plate	ALF-63900-00	PCS	D150-AJ-MAN-10038
Acoustic Sand Detector (Asd) Sensor And Harness	842-30362-15	PCS	D150-AJ-MAN-10015 D150-AJ-PRC-10093
Acoustic Sand Detector (Asd) Funnel	842-30364-18	PCS	D150-AJ-MAN-10008
CAN SIIS L2V2 SW DUAL PRESSURE & TEMPERATURE SENSORS	TBC	PCS	D150-AJ-MAN-10012
Digital Sensor Simulator - Canbus -IEM	815-30033	PCS	D150-AJ-IOM-10016
Optical Flying Lead (OFL) - Comms - Uta 1 F1 To Pciu A F3	ALF-41503-01	PCS	D150-AJ-MAN-10020
Lower Riser Package Production Bore PT A & B	842-30478-01	PCS	D100-AY-IOM-10007
Workover Subsea Control Module Mounting Base (WSCMMB)	ALG-83800-00	PCS	D150-AJ-MAN-10014
FLX360 POWERED TOOL OPERATION & MAINTENANCE MANUAL	S126015-00	PCS	D150-AJ-MAN-10032
Secondary Release Tools - Anchor Block Replacement Tool	S92582	PCS	D150-AJ-MAN-10041

GE Oil&Gas 2017