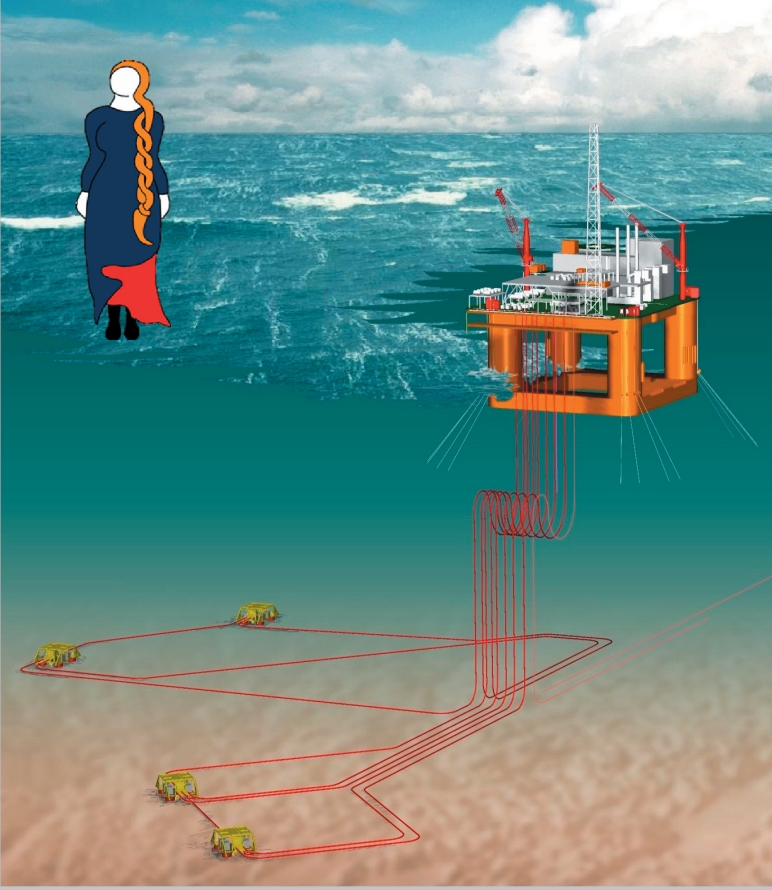

Kvaerner Oilfield Products

STATOIL

KRISTIN SUBSEA PRODUCTION SYSTEM
HANDBOOK

61-NS0200-01 Rev 0

C074-KOP-U-MA-0036 Rev 01

Table of Contents

1 Introduction 2
1.1 Kristin Field Layout and Subsea System 2
1.2 Abbreviations 3
1.3 Template Detail Layout 5
1.4 Equipment list 6
1.5 Other References 8

2 Stack-up drawings 10

3 Kristin Manifold and Template System 22
3.1 Process and Hydraulic Schematics 29
3.1.1 Schematic Process Piping 30
3.1.2 Process Piping Volumes 32
3.1.3 Schematic Hydraulic System 35
3.2 Large Bore Valves 37
3.2.1 Large Bore Valves ROV Marking – Manifold Roof 39
3.3 Small Bore Valves 40
3.3.1 Small Bore Valves ROV Marking – ROV Panels 41

4 Wellhead 44
4.1 BOP Space Out 44

5 Kristin X-Mas Tree System 49
5.1 XT System Overview 49
5.2 Kristin XT 51
5.2.1 X-Mas Tree Valves 56
5.2.2 Choke Module 58
5.2.3 Tree Running Tool with Drill Pipe and Lifting Adapter 61
5.3 Tubing Hanger System 62
5.4 Debris Cap 67
5.5 High Pressure Debris Cap w/ Detailed ROV Panel 68

6 Production Control System 72
6.1 Layout and Schematics 72
6.2 Temporary Abandoned Wells 87

7 Work Over System 91
7.1 WOCS Layout and Schematics 91
7.2 Operating Volumes 98
7.3 Shut down sequences 101
7.4 Kristin Workover Riser System 104

8 Intervention System 112
8.1 HCM Pressure Cap Running Tool 112
8.2 HCM Stroke Tool 114
8.3 2.7 kNm Torque Tool 115
8.4 17 kNm Torque Tool 116
8.5 Shipping and Deployment Basket for HCM 117
8.6 Choke Module Running Tool w/ Detailed ROV Panel 118
8.7 CMRT Shipping Skid 119
8.8 SCM Running Tool w/ Detailed ROV Panel 120
8.9 SCM RT Shipping Skid 121
8.10 Linear Actuator Override Tool (LAOT) 30ton 122
8.11 Linear Actuator Override Tool (LAOT) 120ton 123

Table of Contents

1 Introduction 2
1.1 Kristin Field Layout and Subsea System 2
1.2 Abbreviations 3
1.3 Template Detail Layout 5
1.4 Equipment list 6
1.5 Other References 8

1 Introduction

1.1 Kristin Field Layout and Subsea System

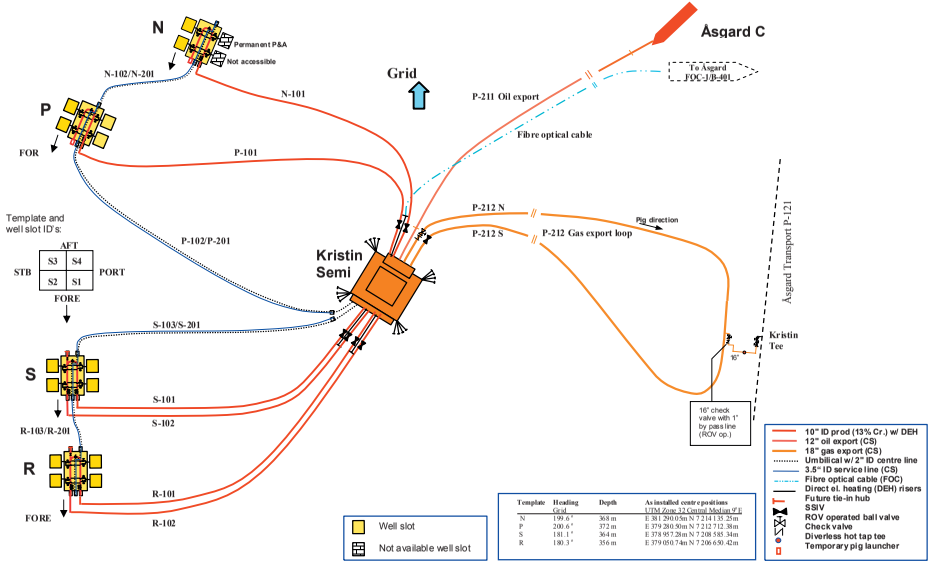

Template	Heading Grid	Depth	As installed centre positions UTM Zone 32 Central Meridian 9°E
N	199.6 °	368 m	E 381 290.05m N 7 214 135.25m
P	200.6 °	372 m	E 379 280.80m N 7 212 712.38m
S	181.1 °	364 m	E 378 957.28m N 7 208 585.34m
R	180.3 °	356 m	E 379 050.74m N 7 206 650.42m

1.2 Abbreviations

AMV	Annulus Master Valve
AP	Annulus Pressure
AV	Annulus Vent
AVV	Annulus Vent Valve
AWV	Annulus Wing Valve
BMV	Bleed / Monitoring Valve
BOP	Blow-out Preventer
BP	Bore Protector
CH	Casing Hanger
CHO	Conductor Housing
CITV	Chemical Injection Throttle Valve
CIV	Chemical Injection Valve
CKV	Choke & Kill Valve
CM	Choke Module
CRT	Choke Running Tool
DCV	Directional Control Valve
DP	Design Pressure
DHHP	Down-Hole High Pressure Supply
DHPT	Down-Hole Pressure & Temperature
DRIV	Dax Release Piston Isolation Valve
DSII	Downhole Scale Inhibitor Isolation
DSIT	Downhole Scale Inhibitor Test
DSIV	Downhole Scale Inhibitor Valve
EDP	Emergency Disconnect Package
EPU	Electronic Power Unit
EQD	Emergency Quick Disconnect
ESD	Emergency Shut Down
ESV	Emergency Safety Valve
ETU	Electronic Test Unit
FPU	Floating Production Unit
HP	High Pressure Supply
HPC	High Pressure Cap
HPCRT	High Pressure Cap Running Tool
HPU	Hydraulic Power Unit
HTC	Hydraulic Test Container
ISU	Integrated Service Umbilical
LAOT	Linear Actuator Override Tool
LP	Low Pressure Supply
LRP	Lower Riser Package
LV	Lubricator Valve
LVDT	Linearly Variable Differential Transmitter
MASCOT	Module And Surface Computer Operations Tester
MBR	Multibore Receptacle
MBS	Multibore Stab
MBSS	Multibore Stab System
MBV	Manifold Branch Valve
MEG	Mono-Ethylene Glycol
MeOH	Methanol
MIV	Methanol Isolation Valve (Well or LRP)
MMB	Module Mounting Bases
MODEM	MOdulate/DEModulate
MPC	Multibore Pressure Cap
MST	Multi Service Tool
MQC	Multi-Quick Connector
OPC	OLE (Object Linking and Embedding) for Process Control
OS	Operator Station
PAS	Product Assembly Sheet
P&ID	Process and Instrumentation Diagram
PCS	Production Control System
PCU	Process Control Unit
PCV	Production Choke Valve
PIV	Production Isolation Valve
PLC	Programmable Logic Controller
PMV	Production Master Valve
PSD	Process Shutdown (system)
PT	Pressure Transmitter
PWV	Production Wing Valve
QT	Quality Transmitter (used for Sand Sensors on XMT)
ROT	Remote Operated Tool
ROV	Remotely Operated Vehicle
RTS	Remotely Operated Tie-in System
RTT	Remotely Operated Tie-in System Tool
RV	Retainer Valve
SAS	Safety and Automation System (Platform Control System)
SCM	Subsea Control Module
SCMMB	Subsea Control Module Mounting Base
SCMRT	Subsea Control Module Running Tool
SCSSV	Surface Controlled Subsurface Safety Valve
SCSSV	Surface Controlled Subsurface Safety Valve
BV	Bleed Valve
SCSSV	Surface Controlled Subsurface Safety Valve
IV	Isolation Valve
SCU	Subsea Control Unit
SCV	Scale Inhibitor Check Valve
SEM	Subsea Electronics Module
SFT	Surface Flow Tree
SIV	Scale Inhibitor Isolation Valve
SIL	Safety Integrity Level (Ref. IEC 61508)
SIS	Safety Instrumented System
SITV	Scale Inhibitor Trottle Valve
SKWV	Surface Kill Wing Valve
SLS	Solid-state Logic Solver
SPC	Sealine Protection Cover
SPCS	Subsea Production Control System
SPCU	Subsea Power and Communication Unit (located topside)
SPMV	Surface Production Master Valve
SPS	Subsea Production System
SPWV	Surface Production Wing Valve
SQIV	Scale Squeeze Isolation Valve
SRIV	Seal Release Isolation Valve
SSIV	Seabed Safety Isolation Valve
SSKWV	Secondary Surface Kill Wing Valve
SSPWV	Secondary Surface Production Wing Valve
SSR	Shear & Seal Ram

TBA	To Be Advised
TFHPU	Test and Flushing High Pressure Unit
TGR	Tree Connector Gasket Release
TH	Tubing Hanger
THIS	Tubing Hanger Insp. and Assy. Stand
THPU	Test Hydraulic Power Unit
THR	Tubing Hanger Release
THR BV	Tubing Hanger Release Bleed Valve
THRTTS	THRT Test Stump
THT	Tree Handling Tool
THTS	Tubing Hanger Test Stump
TRT	Tree Running Tool
TT	Temperature Transducer
UPS	Un-interruptible Power Supply
UTH	Umbilical Termination Head
VXT	Wellhead Connector Gasket Test Line
WBI	Wellbay Insert
WCP	Well Control Package
WH	Wellhead Housing
WHSIP	Wellhead Shut In Pressure
WHP	Wellhead Pressure
WHT	Wellhead Temperature
WL	Wire Line
WO	Workover
WOCS	Workover Control System
WOR	Workover Riser
WOS	Workover System
WOV	Workover Valve
WP	Working Pressure
WPT	Wellhead Pressure and Temperature
WROV	Work ROV
WSIV	Wellhead Scale Inhibitor Valve
XMT	Xmas Tree
XOV	Cross Over Valve
XOV-A	Cross Over Valve-A Annulus
XOV-B	Cross Over Valve-B Annulus
XT	X-Mas Tree (XMT is also used)
XTRT	X-Mas Tree Running Tool (TRT is also used)
XTTS	X-Mas Tree Test Skid
YT	Hydrocarbon Leak Detector

1.3 Template Detail Layout

Template heading, slot ID and Guidepost numbering

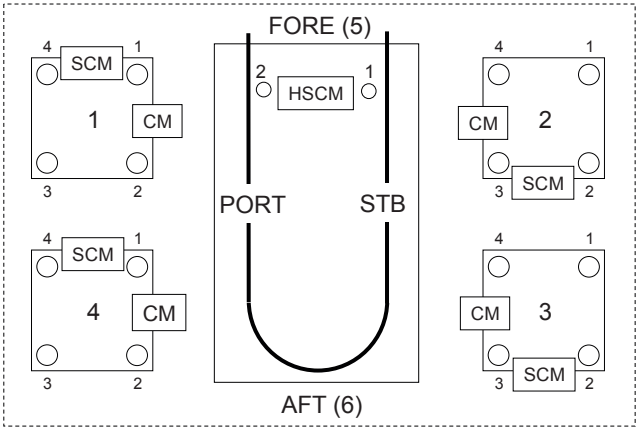

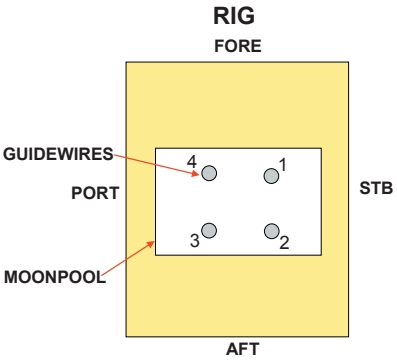

1.4 Equipment list

Weight, Dimensions, valve operation data

PART NO	DESC	Length (mm)	Width (mm)	Height (mm)	Weight (Kg)*
	TREE SYSTEM	**(NB – Values pr.item)**			
	Primary Equipment				
11-NS1203-02	X-Mas Tree assembly with preinstalled BP	4150	5206	3708	48000
11-HS0000-18	Debris Cap	NA	Ø859	830	278
11-HS0000-75	High pressure Debris Cap	4230	3155	1235	9815
	Running Tools				
11-NE0201-00	X-Mas Tree Running Tool assembly with lifting set	3216	3908	2234	16000
11-HS0000-26	Multi Service Tool (MST)	6439	Ø446	NA	2133
11-HS0000-13	Washout Tool for XT Spool & Tubing Hanger	2129	Ø440	NA	1355
11-HS0000-12	Emergency Drill Pipe Hangoff Tool	8453	Ø457	NA	1797
11-HS0000-38	Emergency Tubing Hangoff Tool	9271	Ø457	NA	2066
11-HS0000-22	XT Bore Protector	2880	Ø233	NA	1315
	Test, Transport, handeling & Maintenance equipment				
11-NE0204-00	XT Test and inspection skid incl. Lifting set	2580	2580	2574	7384
11-NE0213-00	XT Shipping Skid incl. Lifting set	3186	5690	900	3484
11-HS0000-23	Tree Test Plug f/ use w/ Bore Protector	1854	Ø457	NA	598
11-HS0000-27	50 Ton Tree Handling Tool with lifting set	NA	Ø758	546	590
11-NE0176-02	Shipping Frame for Tree Bore Protector incl. Lifting set	3230	850	1080	503
	TUBING HANGER SYSTEM				
	Primary Equipment				
11-HS0000-01	Tubing Hanger Assy	2763	Ø462	NA	1692
	Running Tools				
14-HS0031-21	Tubing Hanger Running Tool with DP/Casing Adapter f/ THRT	4000	Ø460	NA	1420
	Test, Transport, Handeling & Maintenance Equipment				
11-NE0176-01	TH Shipping Frame	5200	850	1080	732
11-HS0000-11	Tubing Hanger Offshore Handling Tool - 350 T	2111	Ø328	NA	539
11-HS0000-08	Universal Handling Tool for TH & BP	NA	Ø490	329	136
14-NE0241-00	THRT Test Stump incl. Lifting set	NA	Ø394	720	436
28-HS0000-46	THRT Racking Protector	845	Ø472	NA	137
11-HS0000-81	THRT Handling & Test Tool	938	Ø445	NA	229
11-HS0000-07	Control Coupler Charge & Test Tool w/ flushing plate & storage box	241	383	287	26
	WIRELINE SYSTEM				
	Primary Equipment				
17-HS0000-02	4.734" TH Plug; Lower	332	Ø149	NA	26
17-HS0000-03	5.268" TH Plug; Upper	619	Ø152	NA	41
14-HS0002-12	Trapped Volume Cannister	256	Ø130	NA	12
15-HS0000-06	Wireline Isolation Sleeve (2 piece) - Lower Sleeve	1124	Ø150	NA	21
15-HS0000-66	Wireline Isolation Sleeve (2 piece) - Upper Crossover Sleeve	609	Ø152	NA	19
15-HS0000-07	Long Protection Sleeve	863	Ø151	NA	11
	Running Tools				
15-HS0000-18	Running Tool; Lower Plug	554	Ø130	NA	18
15-HS0000-09	Running Tool; Upper Plug	858	Ø150	NA	25
15-HS0000-08	7" Nom GS Pulling Tool f/ Upper Plug, Isolation Sleeve, Riser test plug & Long Protection Sleeve	708	Ø418	NA	49
15-HS0000-12	3.5" Nom GS Pulling Tool f/ Lower Plug	503	Ø79	NA	13
15-HS0000-13	Centralizer	672	Ø150	NA	23
	Test, Transport, Handeling & Maintenance Equipment				
15-HS0000-40	Riser Test Plug	337	Ø152	NA	12
	CHOKE MODULE SYSTEM				
	Primary Equipment				
11-NS0187-00	Choke Module assembly	1296	1680	238	4206
	Running Tools				
	Supplied by Workpackage 8				
	Test, Transport, Handeling & Maintenance Equipment				
11-NT3301-01	CM Shipping Skid incl. Lifting set	2500	3168	1074	1119

	INTERVENTION TOOLS				
	Primary Equipment				
14-NE0047-00	HCM Pressure Cap Running Tool	1699	3025	1981	1180/ 1003
11-NT3305-00	HCM Stroke Tool	804	1001	1796	310/ 30
94-MX0064-00	2.7 kNm Torque Tool	800	300	402	39/ 30
94-MX0063-00	17 kNm Torque Tool	1245	Ø400	NA	116/ 63
11-NE0223-00	Shipping and Deployment Basket For HCM	1550	2500	2330	700
11-NT3300-01	Choke Module Running Tool	2163	3168	4174	5530/ 4866
11-KI0002-01	SCM Running Tool	1587	3121	3899	3100/ 2694
94-MX0059-00	Linear Actuator Override Tool (LAOT) 30 ton	590	Ø420	NA	40/33
94-MX0062-00	Linear Actuator Override tool (LAOT) 120 ton	1020	Ø421	NA	71/ 57
	Test, Transport, Handeling & Maintenance Equipment				
11-NT3301-01	CMRT Shipping Skid	2500	3168	1074	1120
11-KI0003-02	SCM RT Shipping Skid	2350	3553	2750	4420
	WORKOVER EQUIPMENT AND WORKOVER CONTROL SYSTEM				
	Primary Equipment				
11-MX0001-06	WOCS Container	7 900	2 550	3 150	21 700
11-UW0131-00	Surface Flow Tree	2565	1905	3329	10500
15-MX0437-00	Open Lubricator Valve (OWLV) Assembly	3997	Ø615	NA	5084
11-UW0155-00	Emergency Disconnect Package (EDP)	3760	3390	2777	25170
11-UW0152-00	Well Control Package (WCP)	4310	3285	4126	39781
11-MX0006-06	XT/LRP Umbilical Reel	3 780	2 800	3 590	17 450
11-MX0005-06	LV/THRT Umbilical Reel	3 250	2 440	2 980	11 650
11-UW0162-00	Annulus Hose Reel	2940	3660	3383	11300 (empty)
11-UW132-00	Hydraulic Riser Spider	1532	2330	1035	4400
	Test, Transport, Handeling & Maintenance Equipment				
11-UW0356-00	WCP Test/ Inspection Stand	3348	3348	2287	5740
11-UW0358-00	Shipping Skid WCP	2836	5520	1004	3537
11-UW0357-00	EDP Test/ Inspection Stand	3348	3348	2338	7121
11-UW0140-00	Shipping Basket, Standard Riser Joints	15100	1950	1565	25000
11-UW0141-00	Shipping Basket, Riser Pup Joints	15100	1950	1565	20500
11-UW0149-00	Shipping Basket, Riser Landing, Stress & Tension Joints	15100	1950	1565	23700
11-UW0399-00	Shipping Basket, Riser Safety Joint, Statoil Kristin	4480	1180	1067	4000
11-MX0020-06	SFT Jumper Basket	2160	2160	1500	1100 (empty)
11-MX0022-06	XT/LRP Sheave & Jumper Basket	4160	2400	1500	2300 (empty)
11-MX0021-06	LV/THRT Sheave & Jumper Basket	4160	2400	1500	2300 (empty)

* = dry/ wet

1.5 Other References

Kristin HP/ HT Qualification Program
Ref. doc. 60-NS0037-00
“HP/ PT Close Out Report”

Kristin ROV Operations
Ref. doc. 22-NS0200-11
“ROV Intervention Task List”

Workover Riser Analysis
Ref. doc. 60-UW0617-00
“Executive Summary – Statoil Kristin Workover Riser Analysis”

Table of Contents

2 Stack-up drawings 10

Kristin Subsea Production System

HCM-Tie-In Manifold Spool Termination Assembly

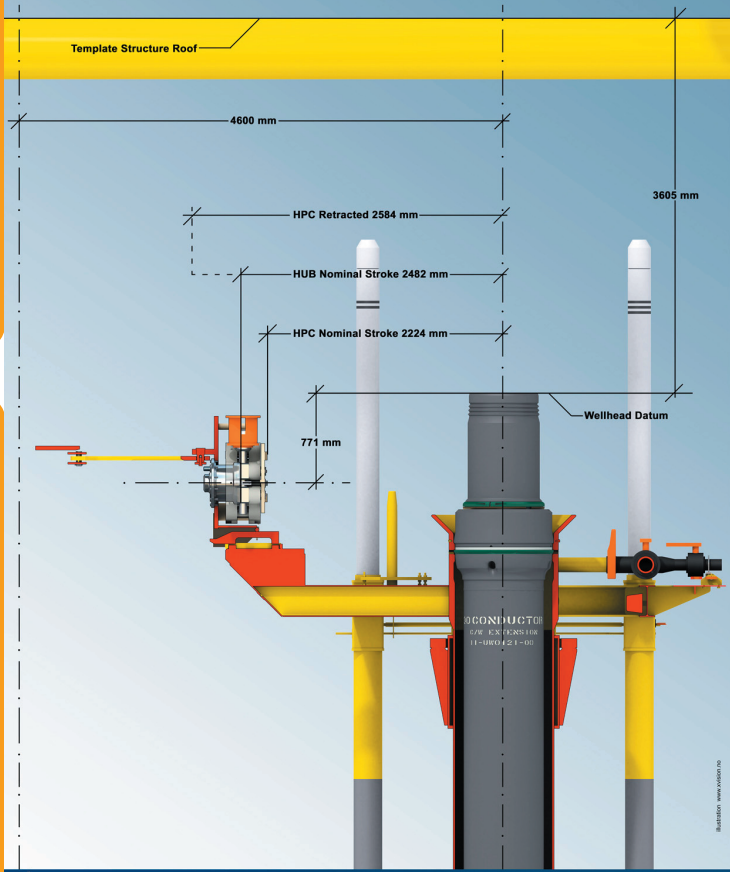

Kristin Subsea Production System

MST-BOP Interface

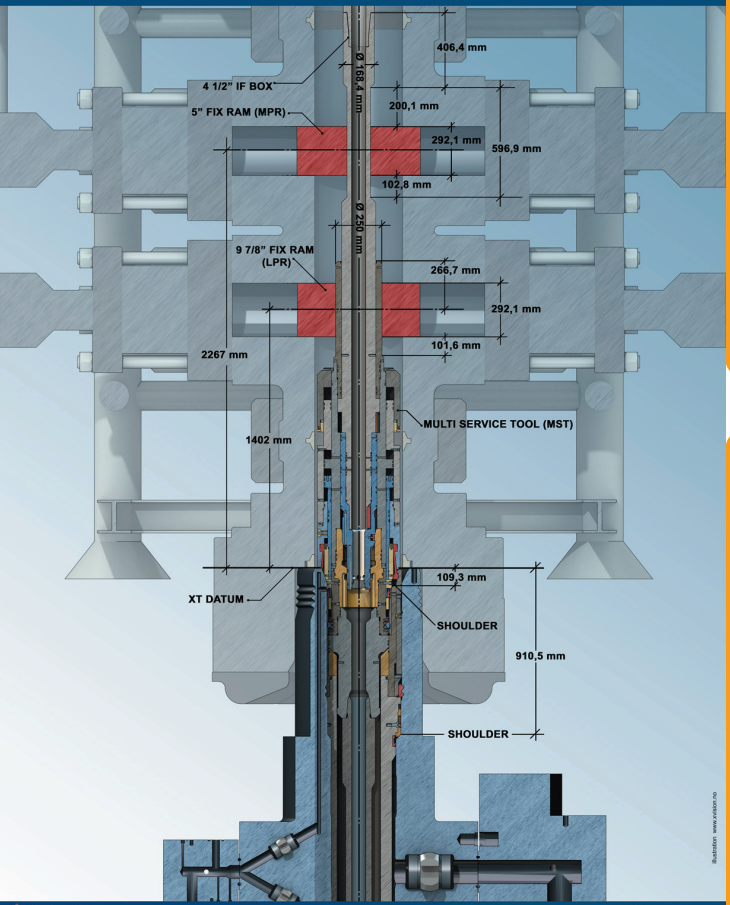

Illustration: www.xvision.no

Kristin Subsea Production System

Design Layout, Interface, Kristin Washout Tool landed in Spoolbody

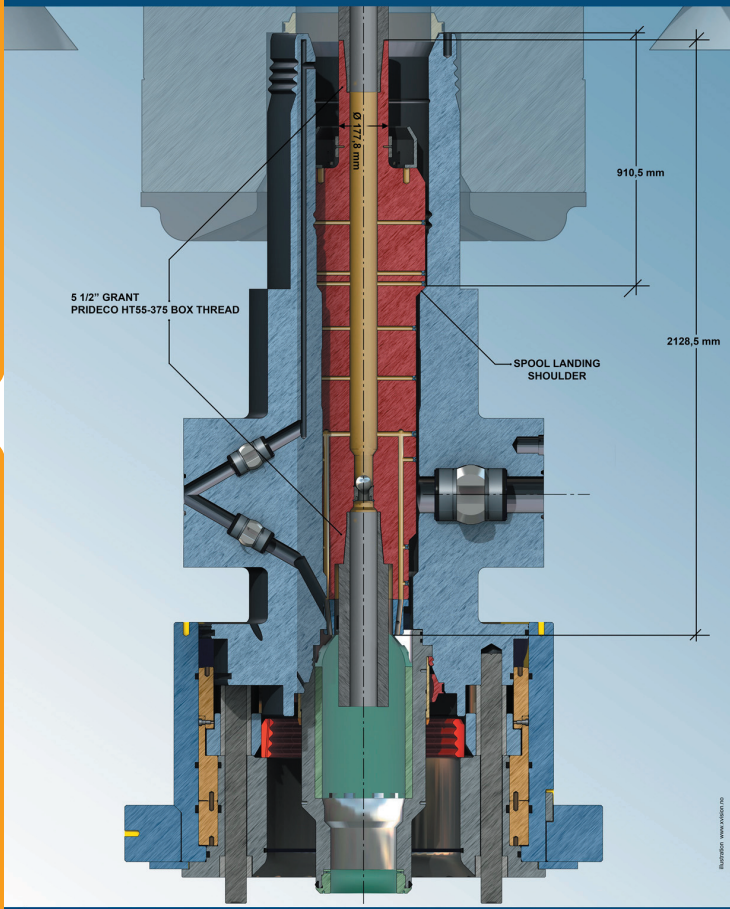

Kristin Subsea Production System

THRT Drillpipe Adapter-BOP Interface

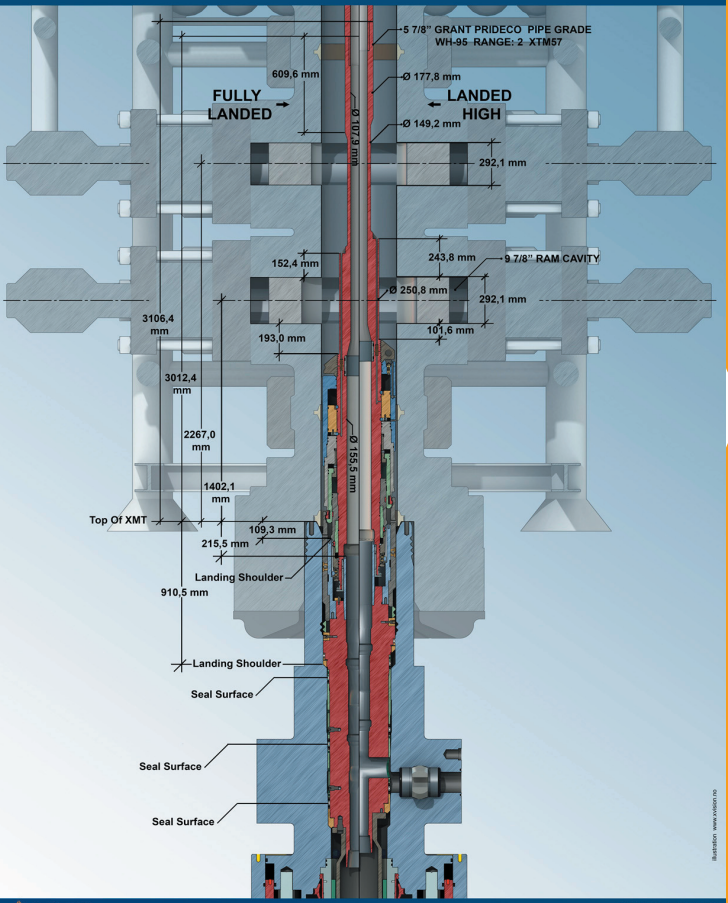

illustration: www.vision.no

Kristin Subsea Production System

Interface, Kristin Washout Tool landed in Tubing Hanger

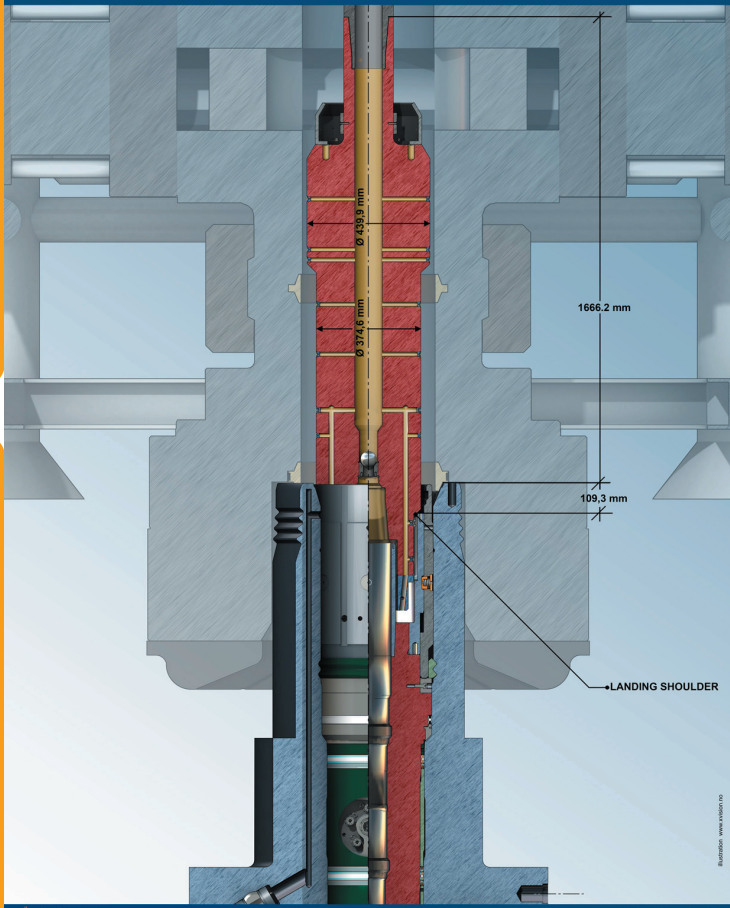

Kristin Subsea Production System

Statoil, Kristin XMT-BOP

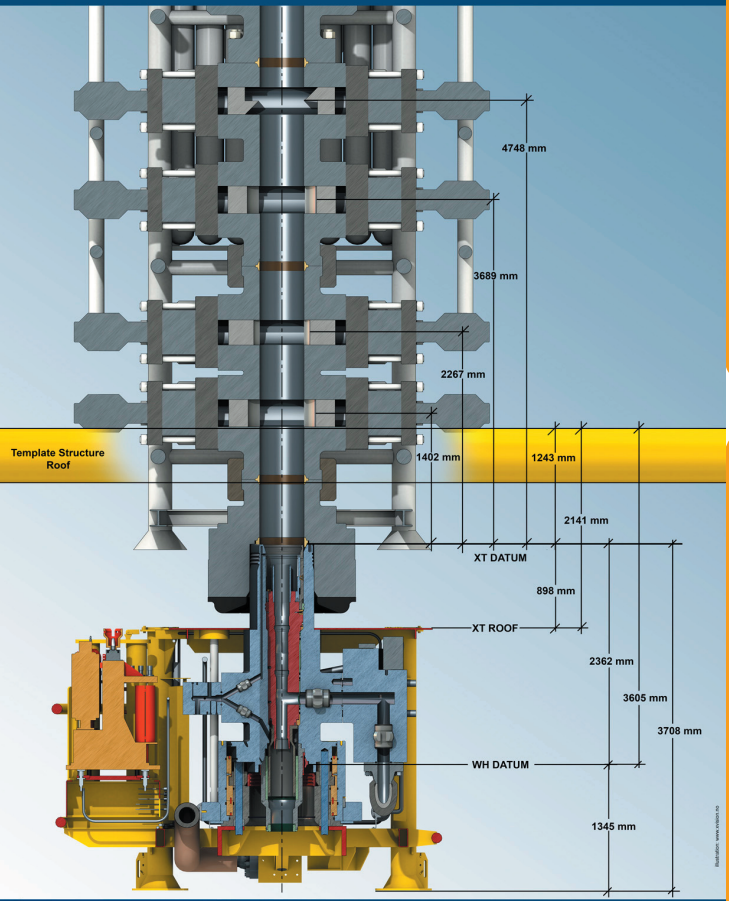

Illustration: www.subsea.no

Kristin Subsea Production System

Lower Wireline Plug in BOP Interface, SSR Stack-Up

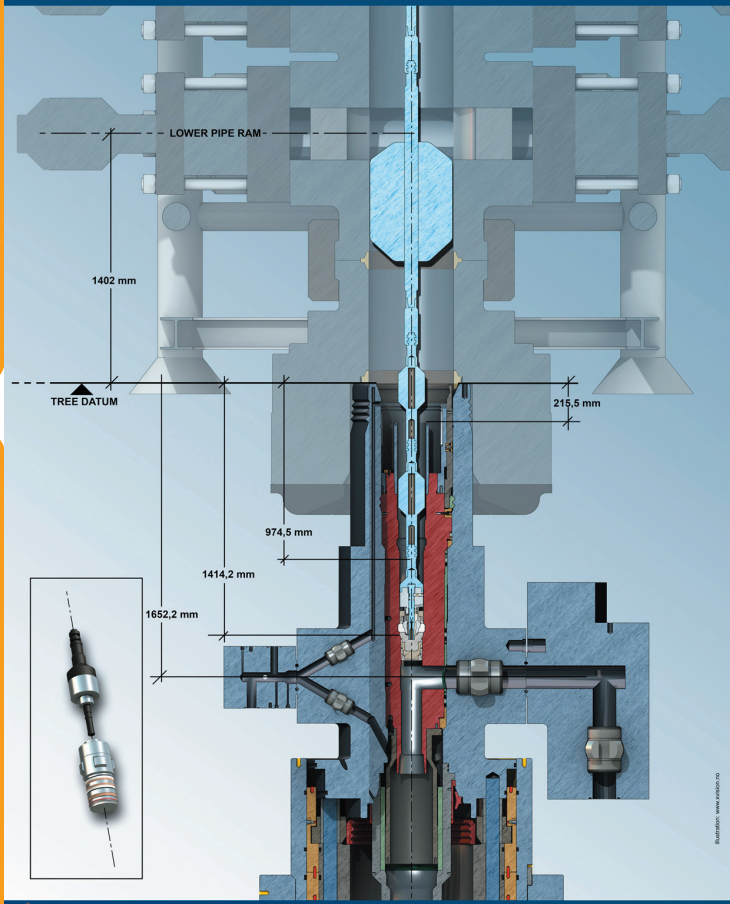

Kristin Subsea Production System

Upper Wireline Plug in BOP Interface, SSR Stack-Up

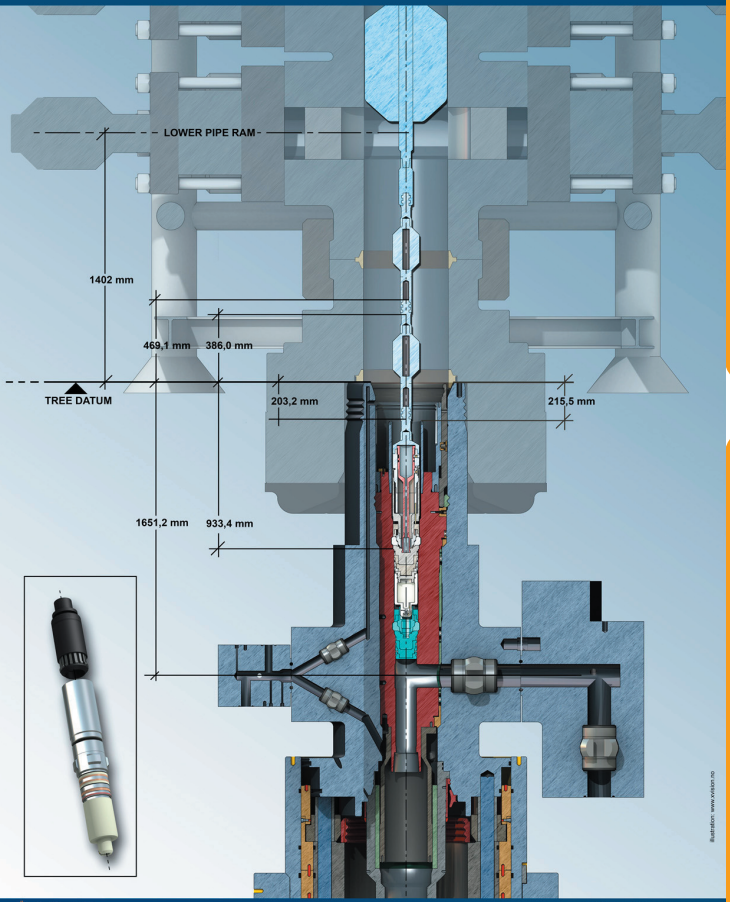

Kristin Subsea Production System

Statoil, Krisin XMT-LRP

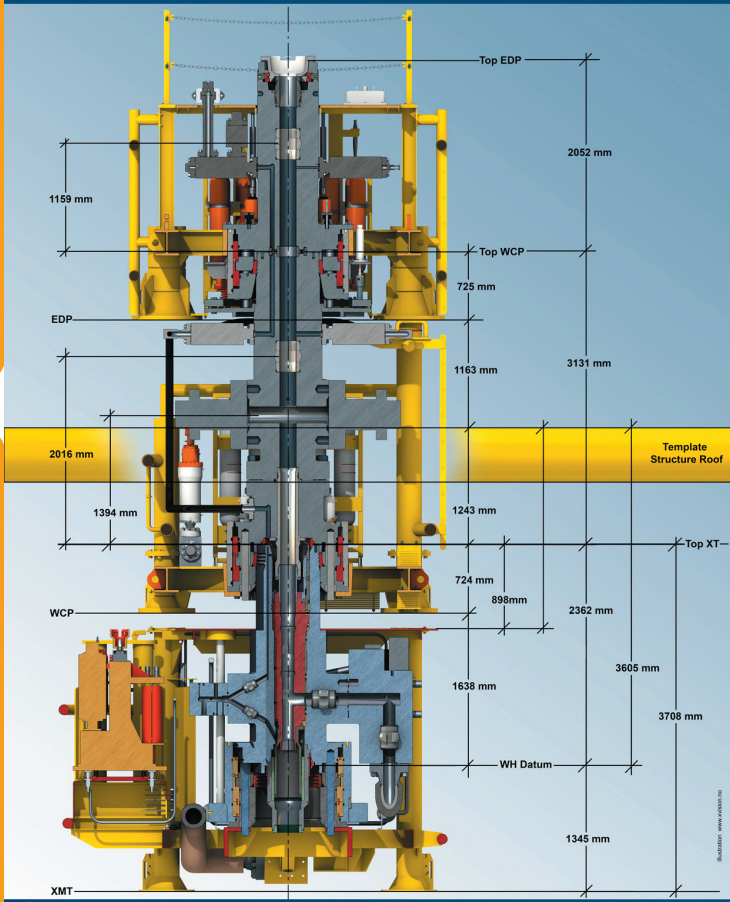

Kristin Subsea Production System

Lower Wireline Plug in LRP Interface, SSR Stack-Up

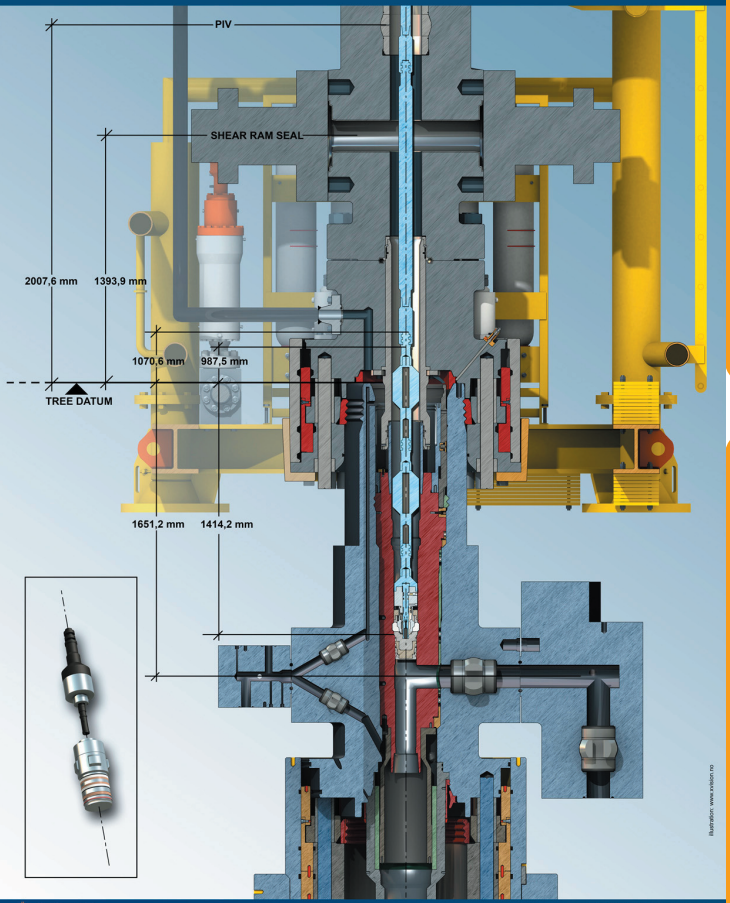

Kristin Subsea Production System

Upper Wireline Plug in LRP Interface, SSR Stack-Up

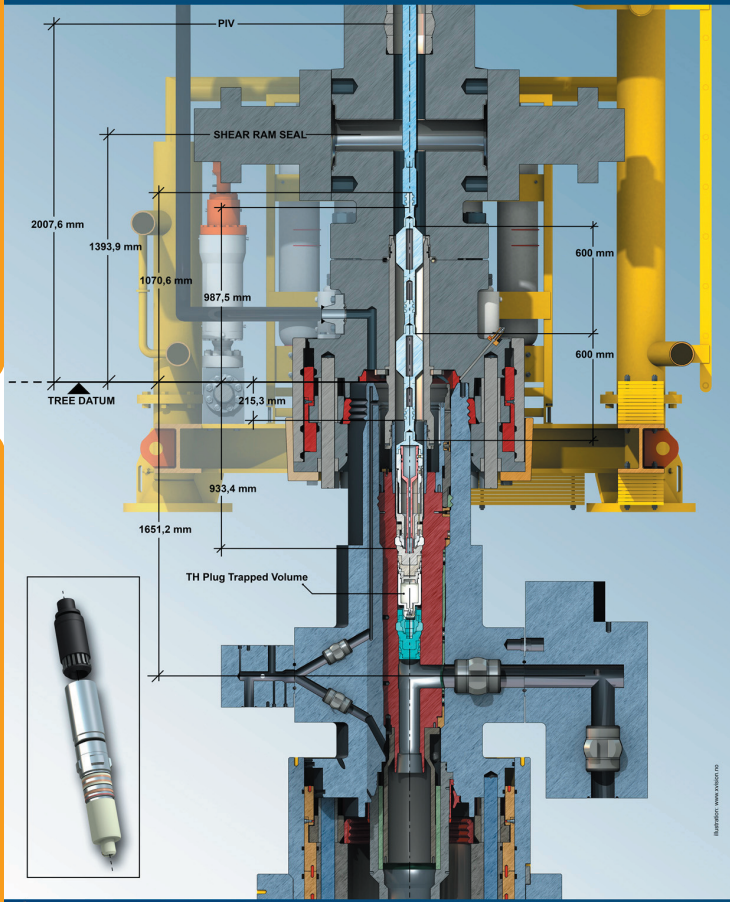

Illustration: www.knison.no

Table of Contents

3 Kristin Manifold and Template System 22
3.1 Process and Hydraulic Schematics 29
3.1.1 Schematic Process Piping 30
3.1.2 Process Piping Volumes 32
3.1.3 Schematic Hydraulic System 35
3.2 Large Bore Valves 37
3.2.1 Large Bore Valves ROV Marking – Manifold Roof 39
3.3 Small Bore Valves 40
3.3.1 Small Bore Valves ROV Marking – ROV Panels 41

3 Kristin Manifold and Template System

Template Structure

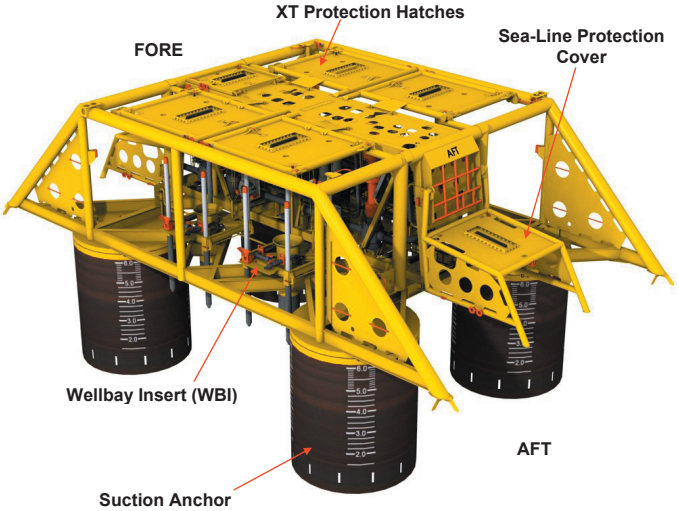

Dimensions:
L x W x H:
29810 x 16680 x 13520

Weights:
Template:
198.6T

Manifold R&S including Piping

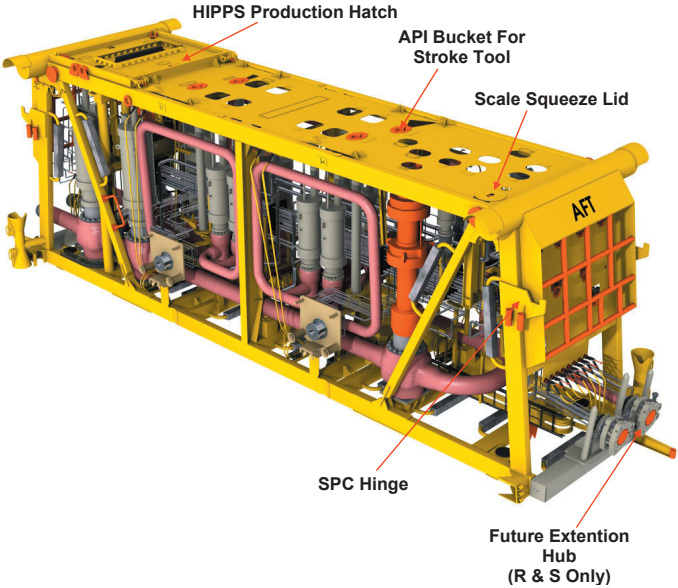

	Dry Empty (kg)	Dry Filled (kg)
Manifold N&P	166 346	183 721
Manifold R&S	196 790	214 165

Dimensions (m):
L x W x H:
N&P: 19,2 x 5,5 x 6,2
R&S: 19,8 x 5,5 x 6,2

Overview Hubs, Connector and Stroke mechanism

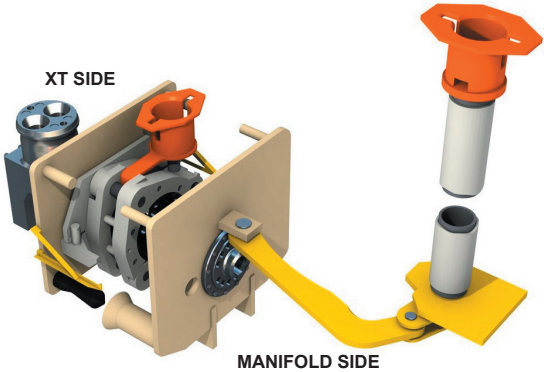

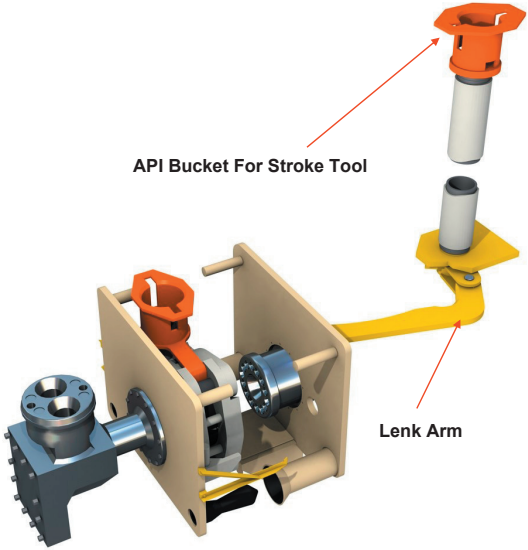

XT Hub

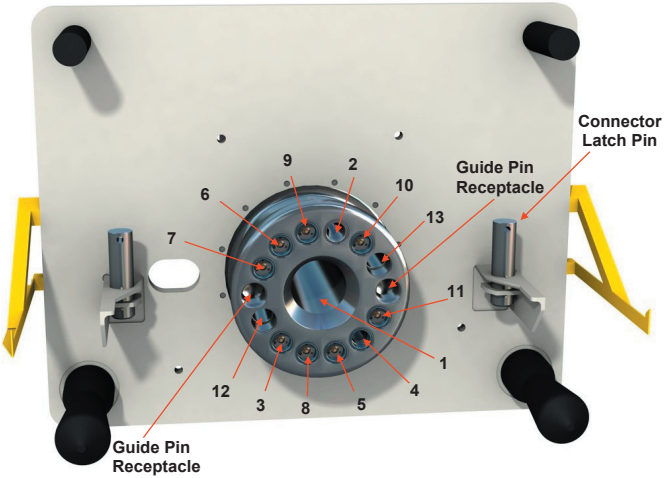

Seen From Manifold Side

ID	Description	Size	Design Pressure (bar)	Check Valve
1	Production	124.5mm	740	NO
2	MEG/Meth.	1 ½""	780	NO
3	Scale Inhibitor	¾"	740	YES
4	Annulus Bleed	¾"	780	NO
5	MBV 2	½"	385	YES
6	MBV 1	½"	385	YES
7	SQIV	½"	385	YES
8	LP Hydraulic A	½"	385	YES
9	LP Hydraulic B	½"	385	YES
10	HP Hydraulic A	½"	1035	YES
11	HP Hydraulic B	½"	1035	YES
12	Spare*		1035	YES
13	Spare		1035	YES

*To Volume Compensating System. In use only when HPC is in place

Hub and Connector seen from outside and towards XT Hub

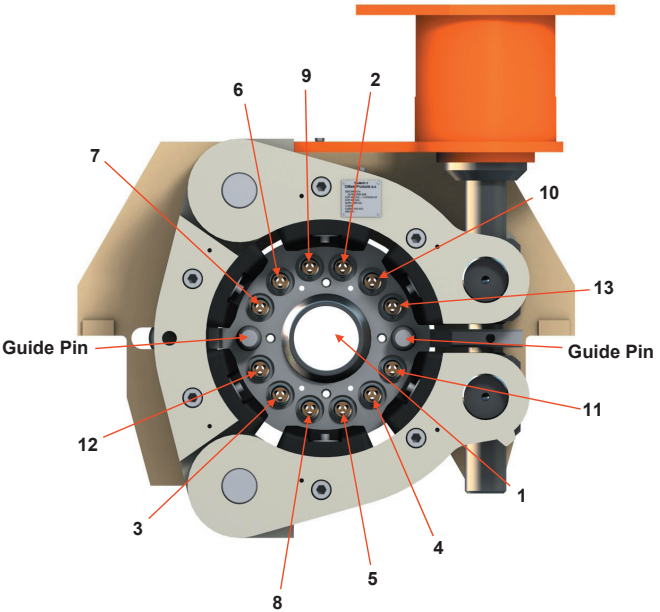

Wellbay Insert

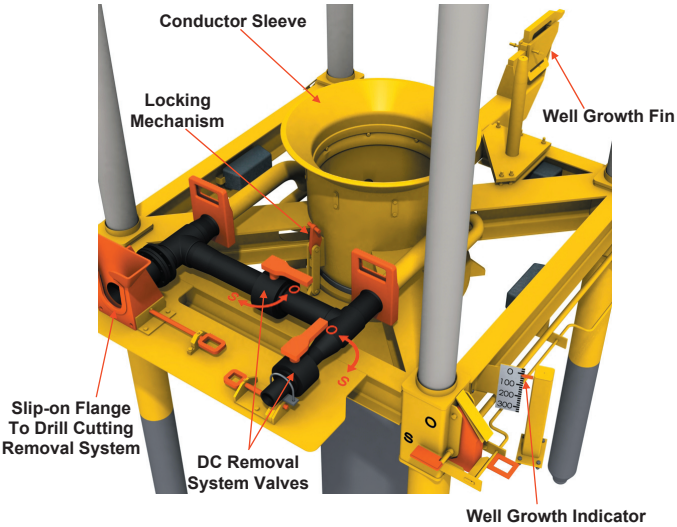

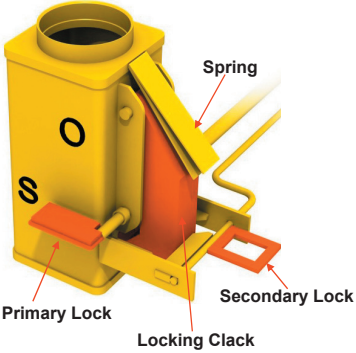

Flowline Pressure Cap Module

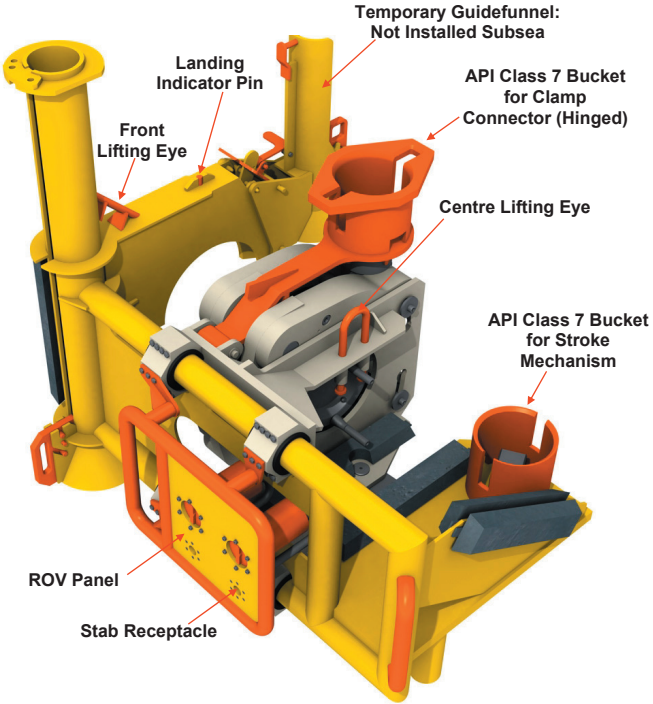

3.1 Process and Hydraulic Schematics

The production manifold piping is designed for the following pressures:

Piping	Pressure
12" Production headers	740 bar
6" Branch Line	740 bar
$3^{1}/_{2}$" Scale Squeeze	740 bar
2" Service Line (MEG/ meth.)	778 bar (*
$^{5}/_{8}$" Annulus Bleed	778 bar (*
$^{1}/_{2}$" Scale Inhibitor	740 bar
$^{3}/_{8}$" to 1" Hydraulic LP	385 bar
$^{1}/_{2}$" Hydraulic HP	1035 bar

*) at seabed level

Large Bore Process Piping Manifold R&S

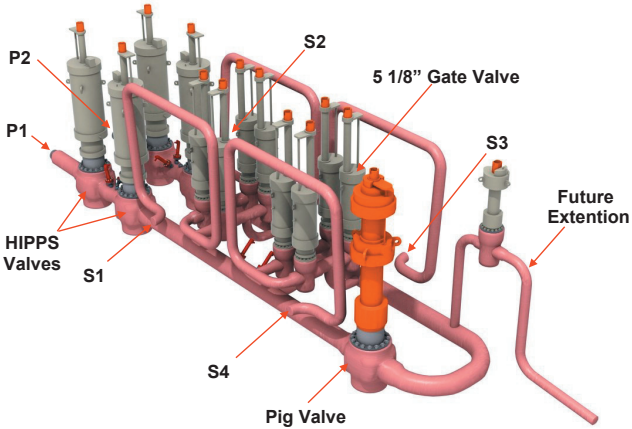

3.1.1 Schematic Process Piping - *N&P Manifold*

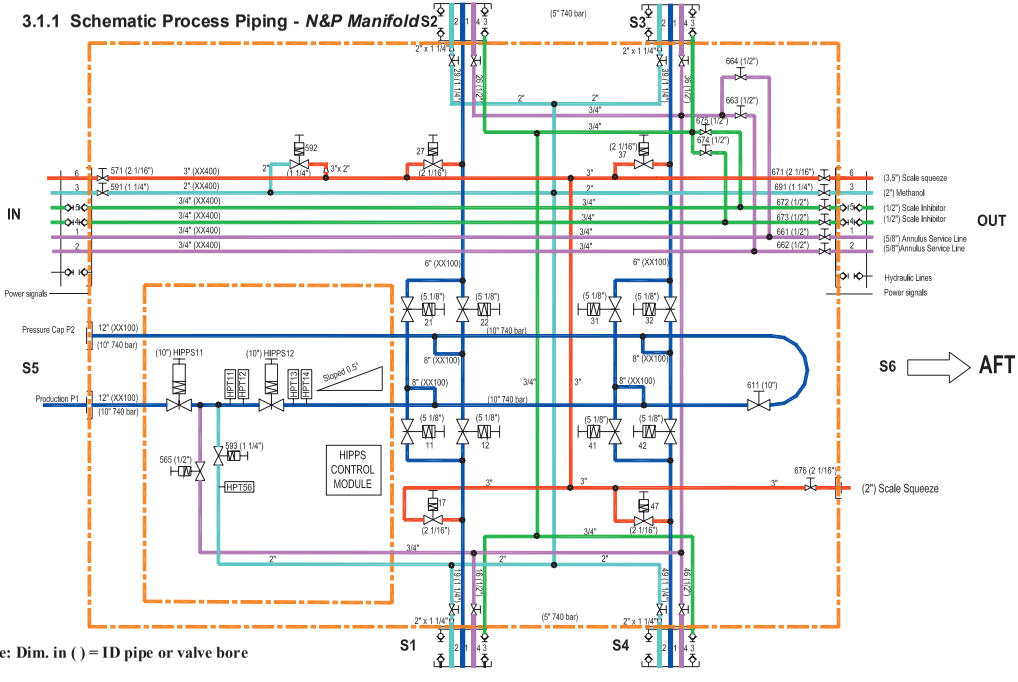

Note: Dim. in ( ) = ID pipe or valve bore

R&S Manifold

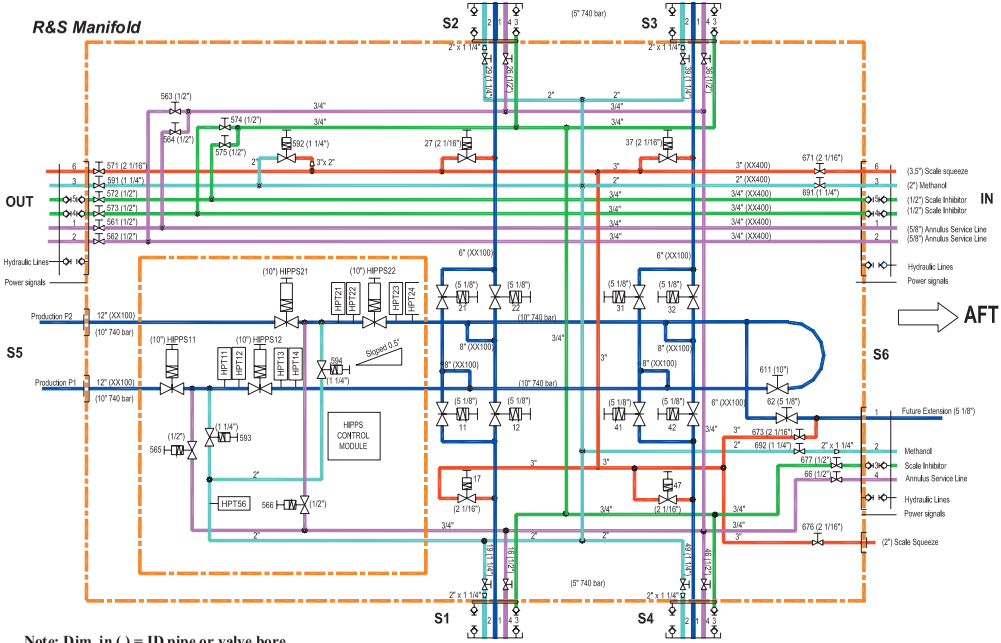

Note: Dim. in ( ) = ID pipe or valve bore

3.1.2 Process Piping Volumes

	Manifold N & P		Manifold R & S	
	Production Litre		Production Litre	
Produced Fluid	VO1	113	VO1	113
	VO2	100	VO2	100
	VO3	571	VO3	571
	VO4	163	VO4	163
	VO5	163	VO5	163
	VO6	925	VO6	861
	VO7	163	VO7	63
	VO8	163	VO8	163
			VO9	163
			VO10	100
			VO11	113
Methanol	Total	167	Total	167
Scale Squeeze	Total	152	Total	158

Manifold N&P for trapped volumes

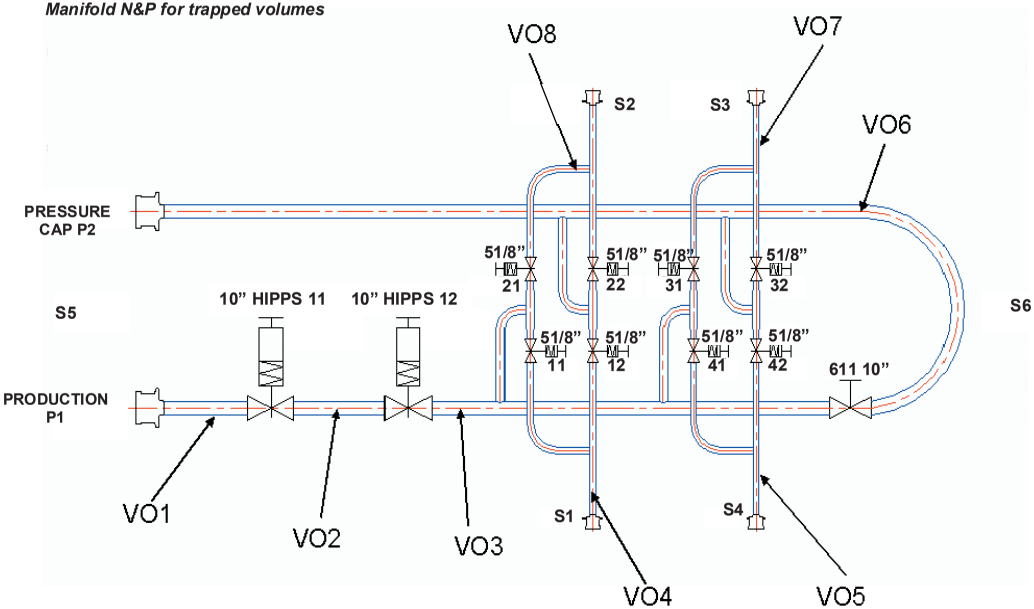

Manifold R&S for trapped volumes

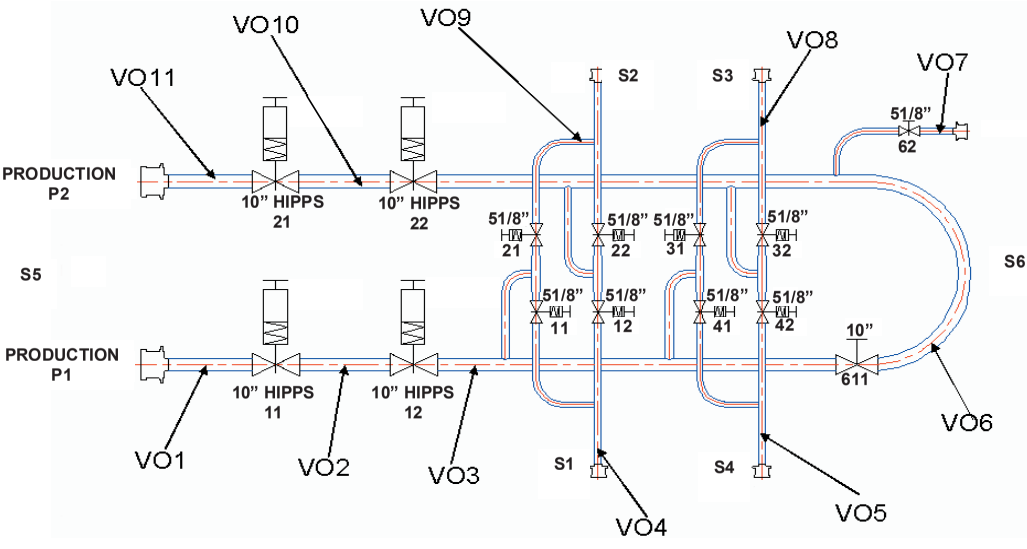

3.1.3 Schematic Hydraulic System - *N&P Manifold*

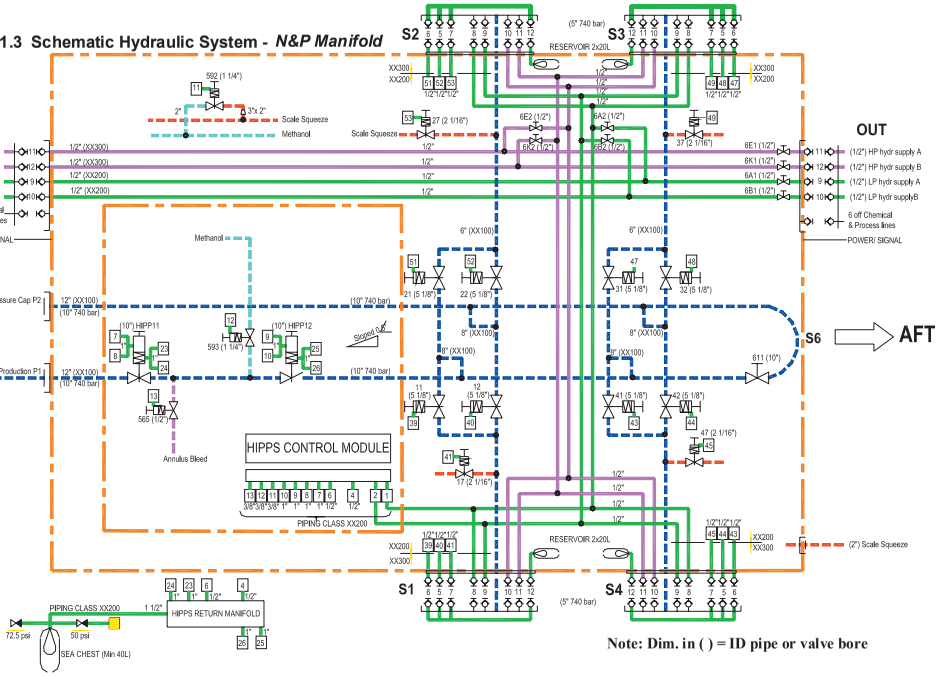

Note: Dim. in ( ) = ID pipe or valve bore

R&S Manifold

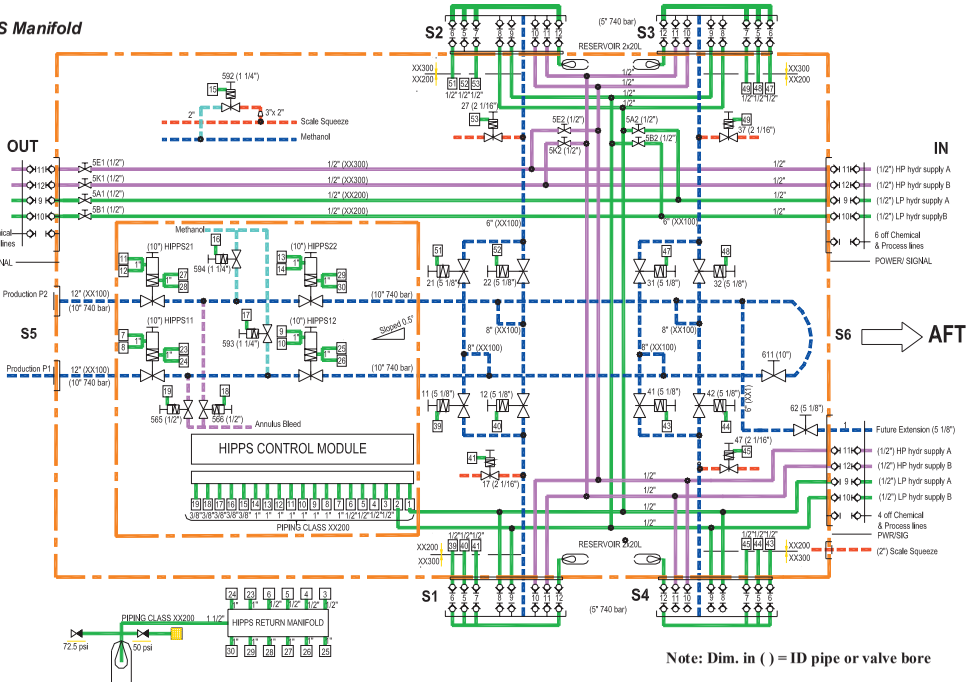

Note: Dim. in ( ) = ID pipe or valve bore

3.2 Large Bore Valves

Valve name	Valve Type	Valve Size	Valve Marking	ROV Tool	Opening Direction	No. of Turns	Operating Torque (Break-out) (Nm)	Damage Torque (Nm)
HIPPS valve	Gate(H/M)	10”	HIPPS; 11, 12, 21, 22	2.7kNm Torque Tool	CCW	243	1180	2000
Pig Loop Isolation valve	Gate(M)	10”	611	2.7kNm Torque Tool	CCW	435	1175	1700
Branch Valve	Gate(H/M)	5 $^{1}/_{8}$”	11, 12, 21, 22, 31, 32, 41, 42	2.7kNm Torque Tool	CCW	143	1160	2700
Future connection	Gate(M)	5 $^{1}/_{8}$”	62	2.7kNm Torque Tool	CCW	80	1005	2500
Scale squeeze	Gate(H/M)	2 $^{1}/_{16}$”	17, 27, 37, 47	2.7kNm Torque Tool	CCW	6	600	1500
Scale squeeze	Gate(M)	2 $^{1}/_{16}$”	676, 673, 671, 571	2.7kNm Torque Tool	CCW	12	860	2210

H = Hydraulic **M = Manual**

Large Bore Valves in Manifold N & P

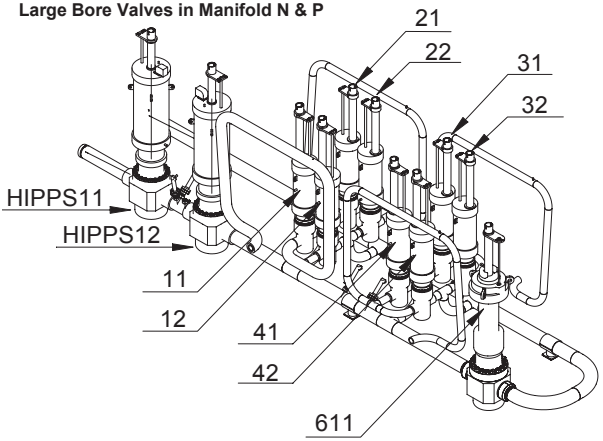

Large Bore Valves in Manifold R & S

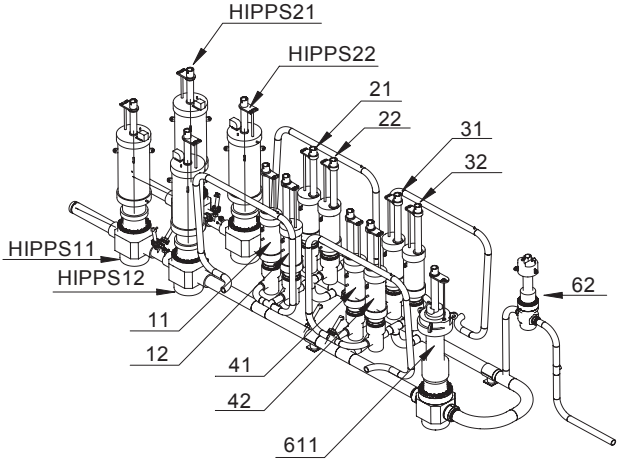

3.2.1 Large Bore Valves ROV Marking – Manifold Roof

Subsea marking Manifold N&P

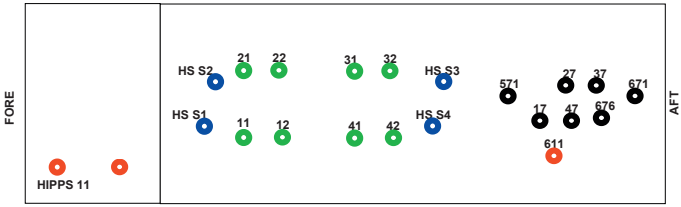

Subsea marking Manifold R&S

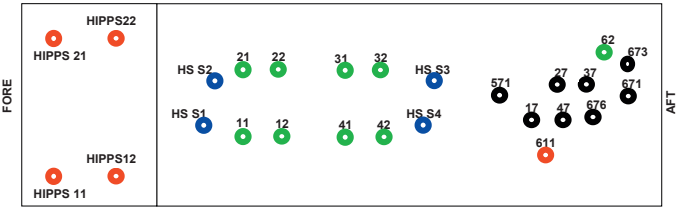

Legend:

- 10” valve
- 5 1/8” valve
- 2 1/16” valve
- Stroke mechanism

3.3 Small Bore Valves

Valve name	Valve Type	Valve Size	Valve Marking	ROV Tool	Opening Direction	No. of Turns	Operating Torque (Break-out) (Nm)	Damage Torque (Nm)
Scale Inhibitor	Rotating Disk (M)	½"	572, 573, 574, 575, 672, 673*, 674, 675, 677	ROV manipulator	CCW	1/4	90/ 50*	400
Annulus Bleed	Rotating Disk (M)	½"	16, 26, 36, 46, 66, 561, 562, 563, 564, 661, 662, 663, 664	ROV manipulator	CCW	1/4	90/ 50*	400
Annulus Bleed	Rotating Disk (H/M)	½"	565, 566	ROV manipulator	CCW	Push+1/4	90/50*	400
Hydraulic LP	Rotating Disk (M)	½"	5A1, 5A2, 5B1, 5B2, 6A1, 6A2, 6B1, 6B2	ROV manipulator	CCW	1/4	90/ 50*	400
Hydraulic HP	Rotating Disk (M)	½"	6E1, 6E2, 6K1, 6K2, 5E1, 5E2, 5K1, 5K2	ROV manipulator	CCW	1/4	90/ 50*	400
MEG/ Meth Injection	Gate (H/M)	1.2"	592, 593, 594	2.7kNm Torque Tool	CCW	8-8.5	240	380
MEG/ Meth Injection	Gate (M)	1.2"	19, 29, 39, 49, 591, 691, 692	2.7kNm Torque Tool	CCW	8-8.5	240/ 120*	380

H = Hydraulic **M = Manual** *** = Break-out/ Running**

3.3.1 Small Bore Valves ROV Marking – ROV Panels

Subsea marking Manifold N&P

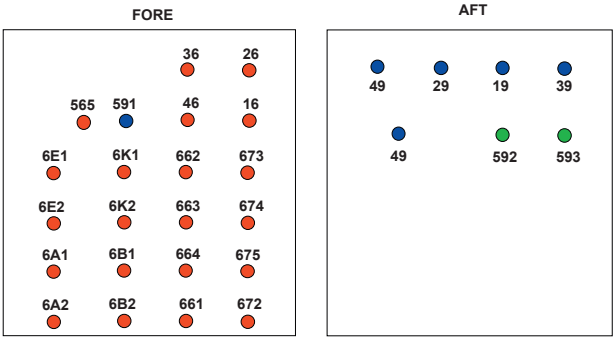

Legend:

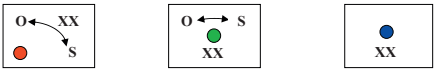

½" Typical ROV Manipulator

1,2" H/M 2.7kNm Torque Tool

1,2" M 2.7kNm Torque Tool

Subsea marking Manifold R&S

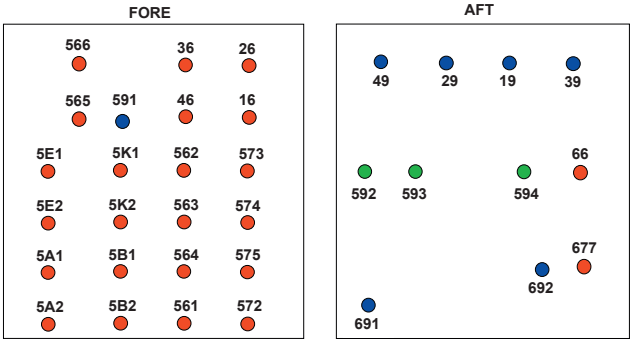

Legend:

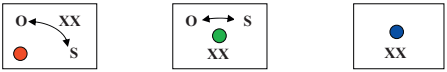

½" Typical ROV Manipulator

1,2" H/M 2.7kNm Torque Tool

1,2" M 2.7kNm Torque Tool

Table of Contents

4 Wellhead 44
4.1 BOP Space Out 44

4.1 BOP Space Out

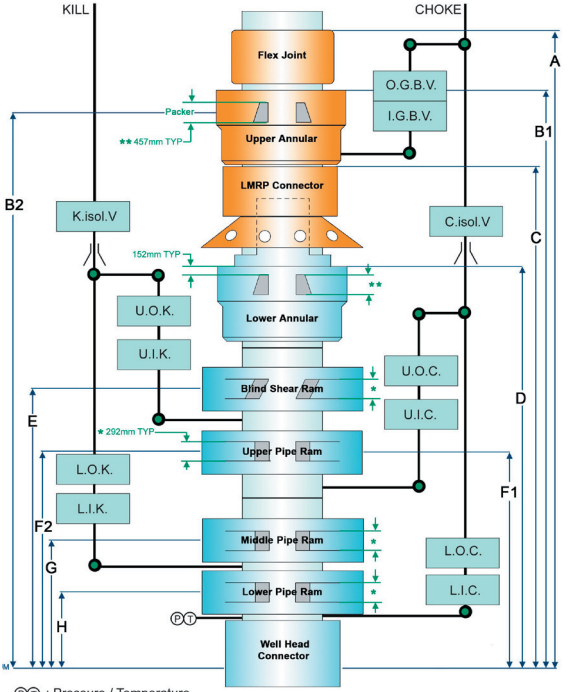

PT : Pressure / Temperature sensors.

* : 292 mm

** : 457 mm

BOP Space Out (Drilling MODE)		Scarabeo 5	
		Size	Height [mm]
A	Flex Joint		13038
B1	Top of Upper Annular		10714
B2	Annular Packer Height (typ.)		457
C	Riser Connector		8855
D	Top of Lower Annular		7017
E	Middle of Blind Seal Ram		4748
F1	Middle of Upper Pipe Ram	5" -7⅝"	3689
F2	Pipe Ram Height (typ.)		292
G	Middle of Middle Pipe Ram	5"	2267
H	Middle of Lower Pipe Ram	5"-7 ⅝"	1402

Kristin Subsea Production System

Statoil Kristin Wellhead System, Layout drawing

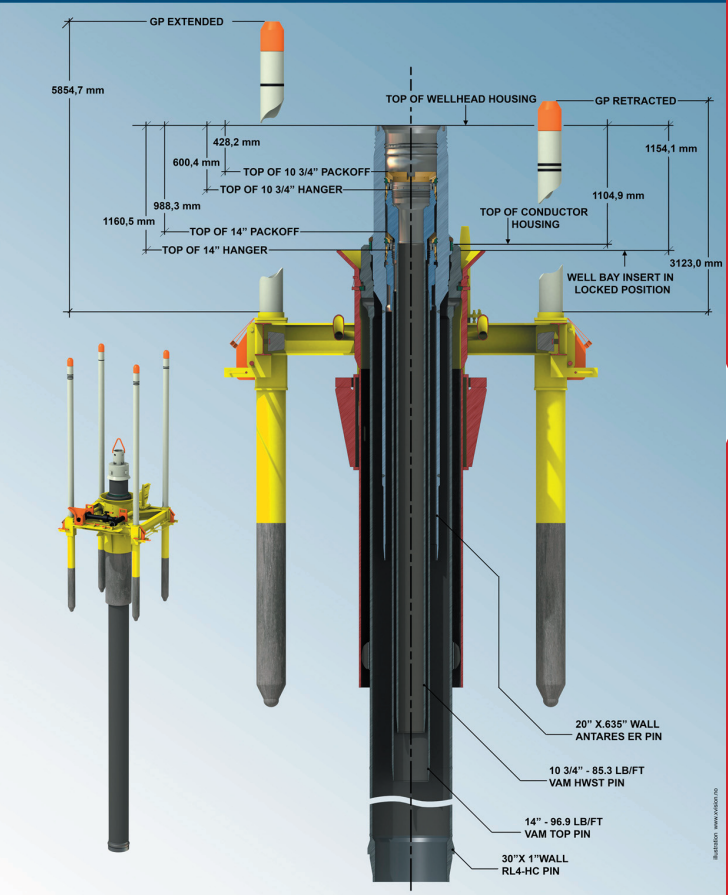

Illustration: www.vision.no

Kristin Subsea Production System

Wellhead System Top Assembly for Kristin Field Development

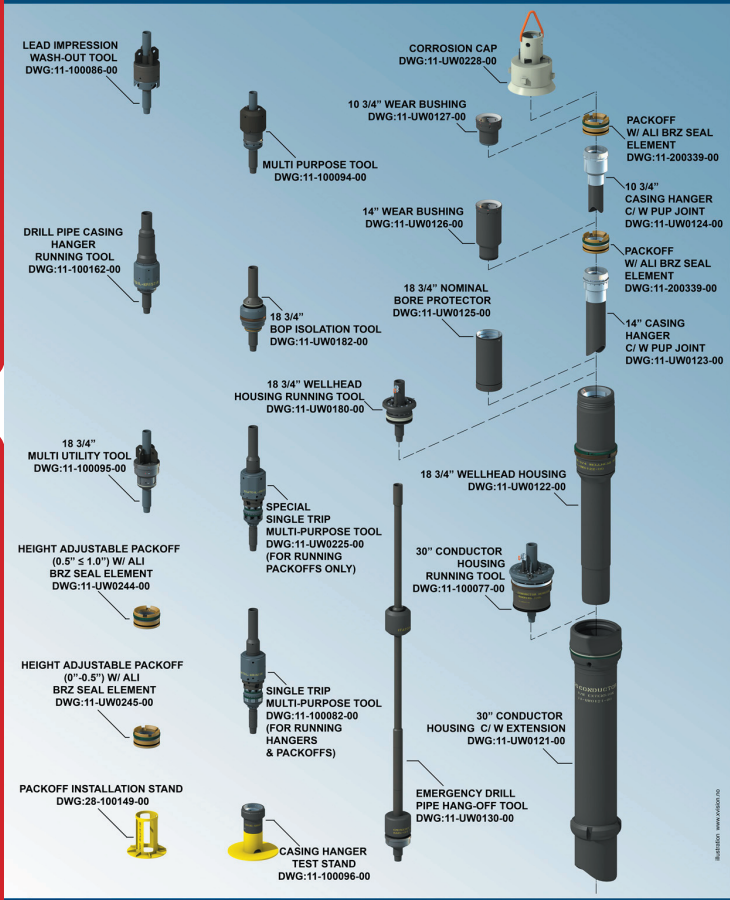

Table of Contents

5 Kristin X-Mas Tree System 49
5.1 XT System Overview 49
5.2 Kristin XT 51
5.2.1 X-Mas Tree Valves 56
5.2.2 Choke Module 58
5.2.3 Tree Running Tool with Drill Pipe and Lifting Adapter 61
5.3 Tubing Hanger System 62
5.4 Debris Cap 67
5.5 High Pressure Debris Cap w/ Detailed ROV Panel 68

5.1 XT System Overview

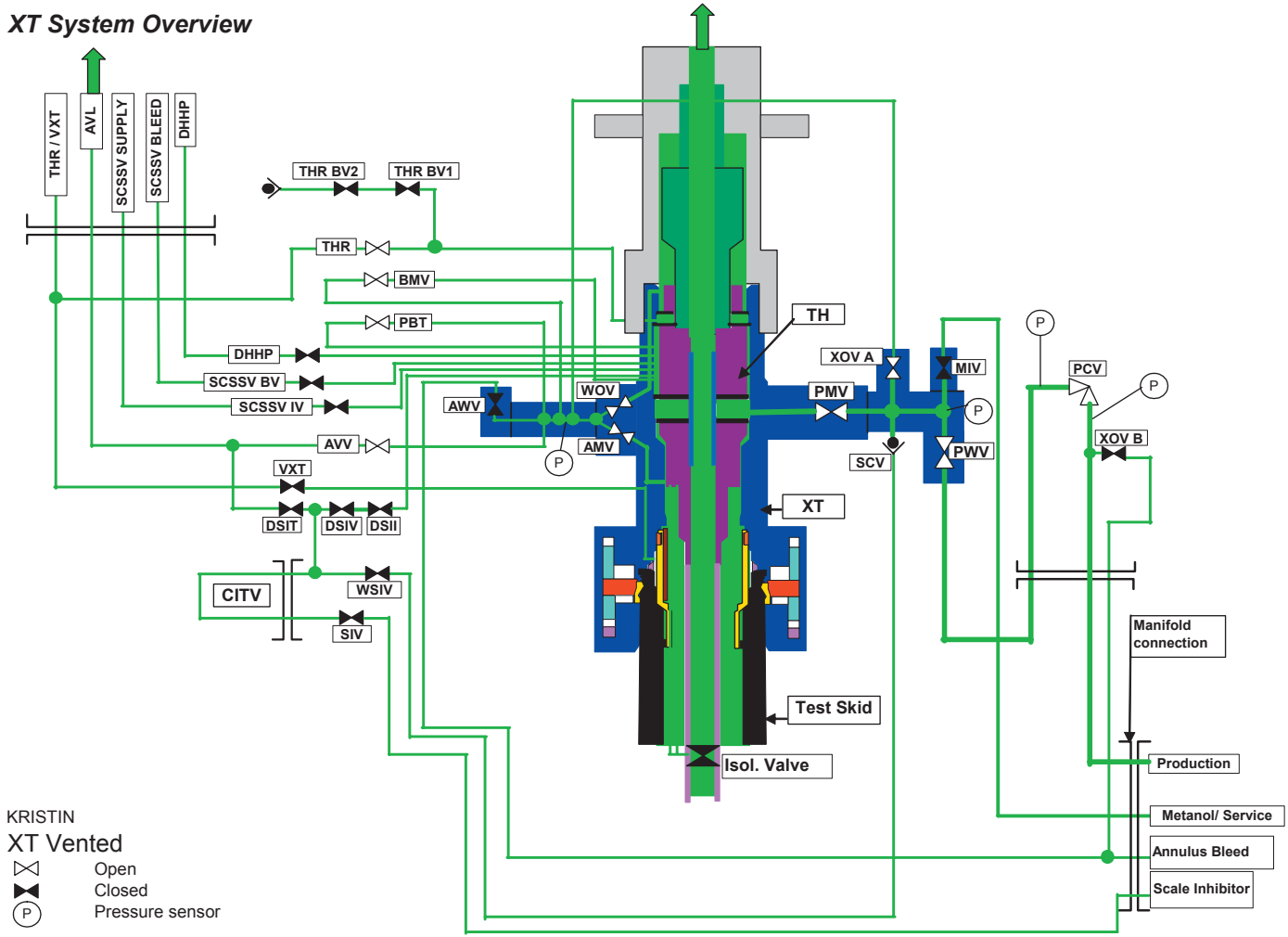

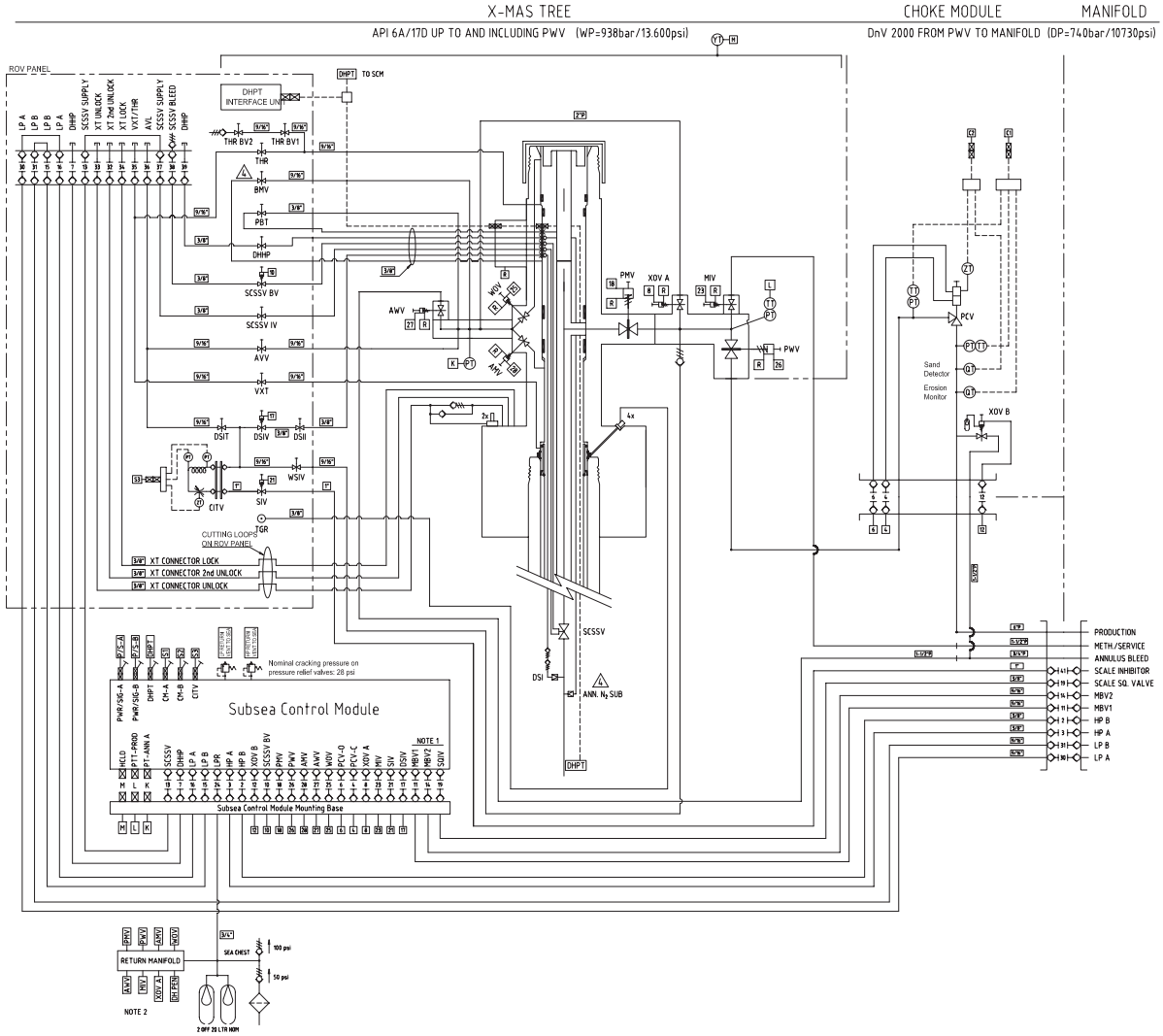
X-MAS TREE
API 6A/17D UP TO AND INCLUDING PWV (WP=938bar/13.600psi)
CHOKE MODULE
DnV 2000 FROM PWV TO MANIFOLD (DP=740bar/10730psi)
MANIFOLD
ROV PANEL
DHPT INTERFACE UNIT
TO SCM
THR BV2
THR BV1
THR
BMV
PBT
DHHP
SCSSV BV
SCSSV IV
AVV
VXT
DSIT
DSIV
DSII
WSIV
SIV
CITV
TGR
CUTTING LOOPS ON ROV PANEL
XT CONNECTOR LOCK
XT CONNECTOR 2nd UNLOCK
XT CONNECTOR UNLOCK
AWV
WOV
ANV
PMV
XOV A
MIV
PWV
PCV
Sand Detector
Erosion Monitor
XOV B
SCSSV
DSI
ANN. N2 SUB
DHPT
Nominal cracking pressure on pressure relief valves: 28 psi
Subsea Control Module
Subsea Control Module Mounting Base
NOTE 1
PRODUCTION
METH./SERVICE
ANNULUS BLEED
SCALE INHIBITOR
SCALE SQ. VALVE
MBV2
MBV1
HP B
HP A
LP B
LP A
RETURN MANIFOLD
SEA CHEST
100 psi
50 psi
NOTE 2
2 OFF 25 LTR MOM

5.2 Kristin X-Mas Tree

XT Pressure containing parts

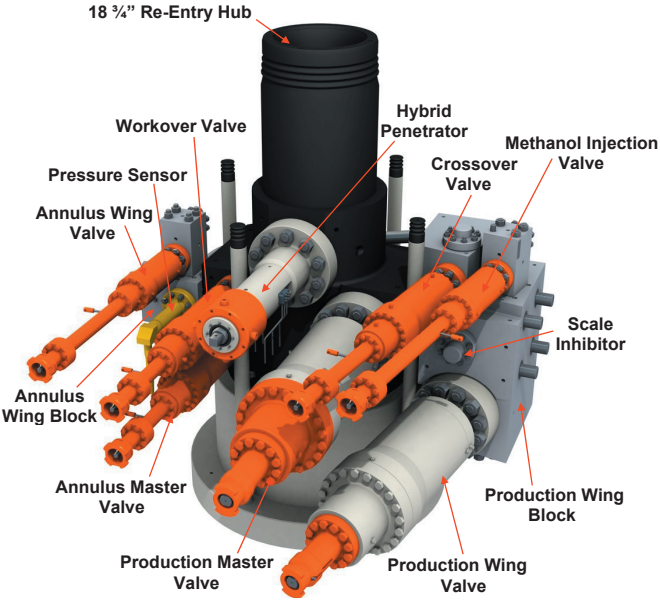

Tree Stalk front – right side section view

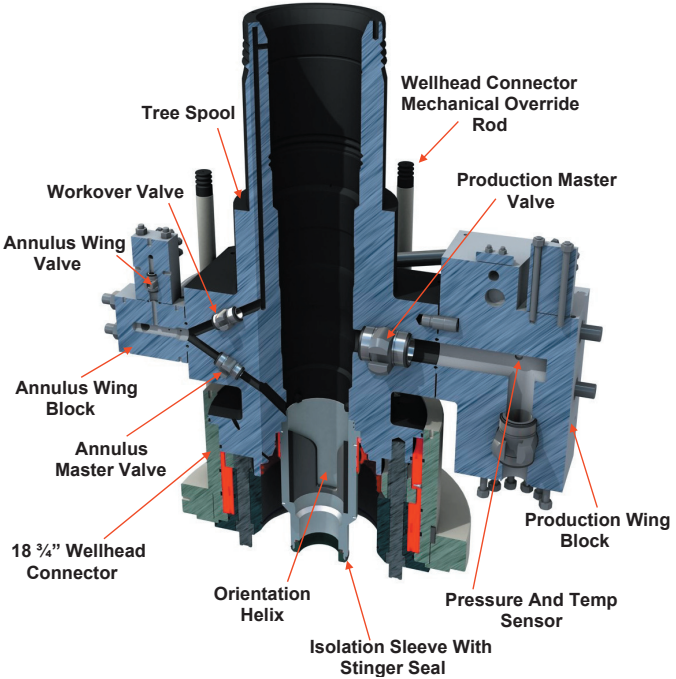

Kristin X-Mas Tree

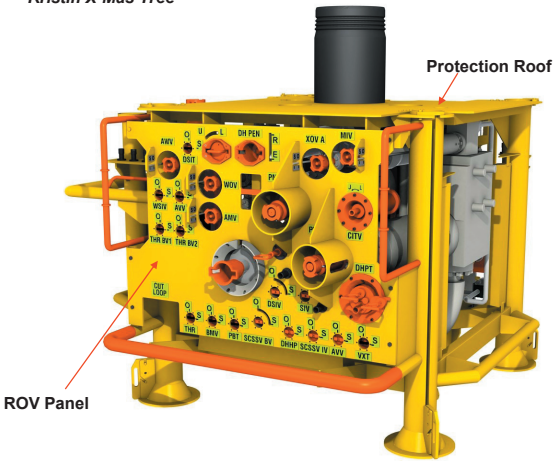

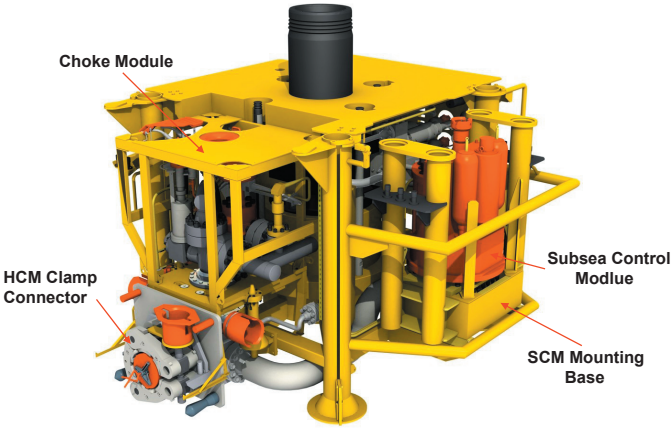

XT ROV Panel

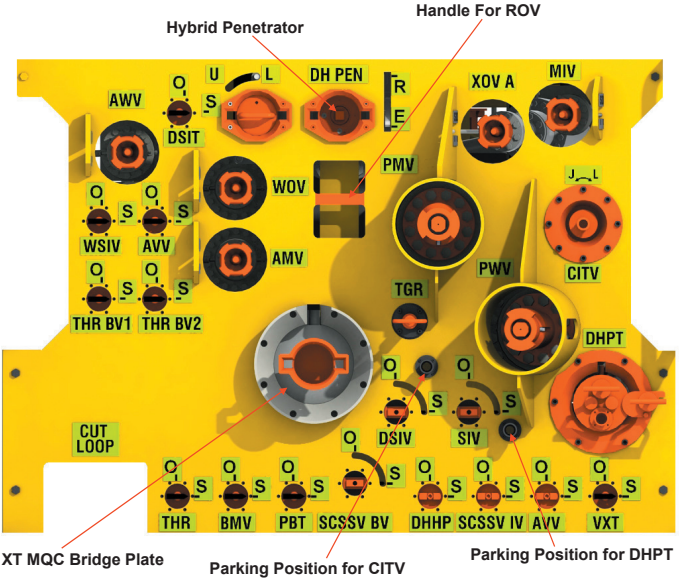
Hybrid Penetrator
Handle For ROV
AWV
DSIT
U
L
DH PEN
R
E
XOV A
MIV
WOV
PMV
J
L
WSIV
AVV
AMV
PWV
CITV
THR BV1
THR BV2
TGR
DHPT
CUT LOOP
DSIV
SIV
THR
BMV
PBT
SCSSV BV
DHHP
SCSSV IV
AVV
VXT
XT MQC Bridge Plate
Parking Position for CITV
Parking Position for DHPT

CITV Details

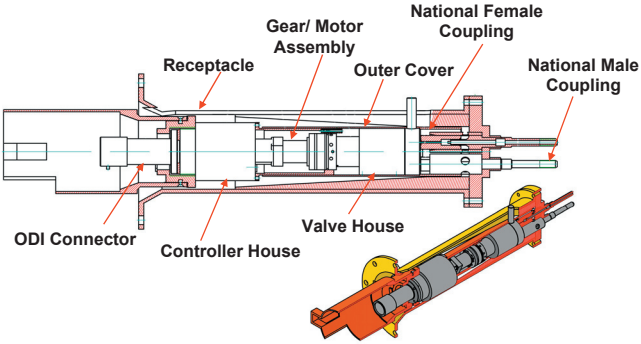

Hybrid Penetrator Assembly (5 Hydraulic/ 4 Pin Electric)

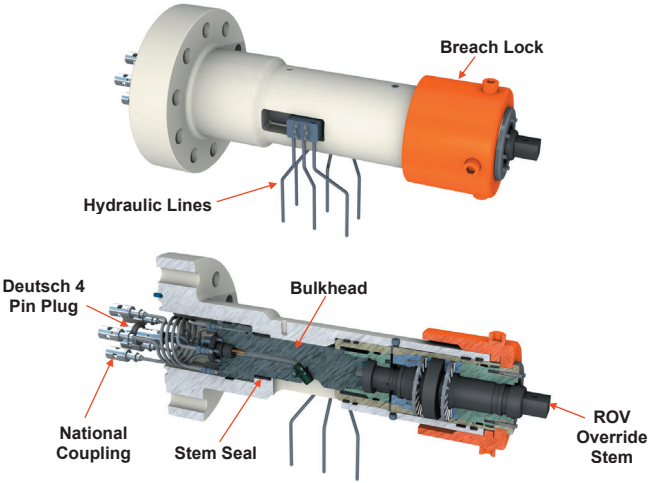

5.2.1 X-Mas Tree Valves

Large Bore Valves

Valve Name	Valve Type	Valve Size	Valve Marking	ROV Tool	Opening Direction	No. Of Turns	Oper. Press. (LAOT)	Max. Press. (LAOT)
Production Master Valve	Gate	5-1/8”	PMV	120 t LAOT	Linear stroke	N/A	0-690 bar (*)	690 bar
Production Wing Valve	Gate	5-1/8”	PWV	120 t LAOT	Linear stroke	N/A	0-690 bar (*)	690 bar
Annulus Master Valve	Gate	2 - 1/16”	AMV	30 t LAOT	Linear stroke	N/A	0-207 bar (*)	207 bar
Work Over Valve	Gate	2- 1/16”	WOV	30 t LAOT	Linear stroke	N/A	0-207 bar (*)	207 bar
Cross Over Valve A	Gate	2- 1/16”	XOV A	30 t LAOT	Linear stroke	N/A	0-207 bar (*)	207 bar
Annulus Wing Valve	Gate	1”	AWV	30 t LAOT	Linear stroke	N/A	0-207 bar (*)	207 bar
Methanol Injection Valve	Gate	1”	MIV	30 t LAOT	Linear stroke	N/A	0-207 bar (*)	207 bar

*) Required operating pressure to open valve is dependant of differential pressure in the bore.

Choke Module Valves
Large Bore Valves

Valve Name	Valve Type	Valve Size	Valve Marking	ROV Tool	Opening Direction	No. Of Turns	Oper. Torque	Damage Torque
Cross Over Valve B	Gate	1,2”	XOV B	2,7 kNm Torque Tool	CCW Open CW Close	8	240 Nm	380 Nm
Production Choke Valve	External sleeve / Plug & cage	5-1/8”	PCV	2,7 kNm Torque Tool	CCW Open CW Close	7,5	150 Nm	400 Nm

Small Bore Valves

Valve Name	Valve Type	Valve Size	Valve Marking	ROV Tool	Opening Direction	No. Of Turns	Oper. Torque [Nm]	Damage Torque [Nm]
Downhole Scale Inhibitor Test	Rotary Gate	½”	DSIT	Manip.	CCW Open CW Close	¼	90	400
Wellhead Scale Inhibitor	Rotary Gate	½”	WSIV	Manip.	CCW Open CW Close	¼	90	400
Annulus Vent Valve	Rotary Gate	½”	AVV	Manip.	CCW Open CW Close	¼	90	400
THR Bleed Valve 1	Rotary Gate	½”	THR BV1	Manip.	CCW Open CW Close	¼	90	400
THR Bleed Valve 2	Rotary Gate	½”	THR BV2	Manip.	CCW Open CW Close	¼	90	400

Tubing Hanger Release	Rotary Gate	½"	THR	Manip.	CCW Open CW Close	¼	90	400
Bleed Monitoring Valve	Rotary Gate	½"	BMV	Manip.	CCW Open CW Close	¼	90	400
Plug Bleed and Test Valve	Rotary Gate	½"	PBT	Manip.	CCW Open CW Close	¼	90	400
Downhole High Pressure	Rotary Gate	½"	DHHP	Manip.	CCW Open CW Close	¼	90	400
SCSSV Isolation Valve	Rotary Gate	½"	SCSSV IV	Manip.	CCW Open CW Close	¼	90	400
Downhole Scale Inhibitor Isolation	Rotary Gate	½"	DSII	Manip.	CCW Open CW Close	¼	90	400
VX Test	Rotary Gate	½"	VXT	Manip.	CCW Open CW Close	¼	90	400
SCSSV Bleed Valve	Rotary Gate	½"	SCSSV BV	Manip.	CCW Open CW Close Push stem to engage override	¼	90	400
Downhole Scale Inhibitor Valve	Rotary Gate	½"	DSIV	Manip.	CCW Open CW Close Push stem to engage override	¼	90	400
Scale Inhibitor Isolation Valve	Rotary Gate	½"	SIV	Manip.	CCW Open CW Close Push stem to engage override	¼	90	400

Other ROV Interfaces

Valve Name	Valve Type	Valve Size	Valve Marking	ROV Tool	Opening Direction	No. Of Turns	Oper. Torque [Nm]	Damage Torque [Nm]
Chemical Injection Throttle Valve	Metering Valve	N/A	CITV	2,7 kNm Torque Tool	CCW to Retract CW to Engage	5	250	500
Hybrid Penetrator	N/A	N/A	DH PEN	2,7 kNm Torque Tool	CCW to Retract CW to Engage	18,8	500	1350
MQC Female Bridge Plate	N/A	N/A	N/A	2,7 kNm Torque Tool	CCW to Disconnect CW to Connect	10	1100	2500

XT Production Bore Volumes

Pipe Section	Volume (Litre)
PMV-PWV	19
PWV-PCV	120
PCV-HCM Connector	69

5.2.2 Choke Module
With Frame

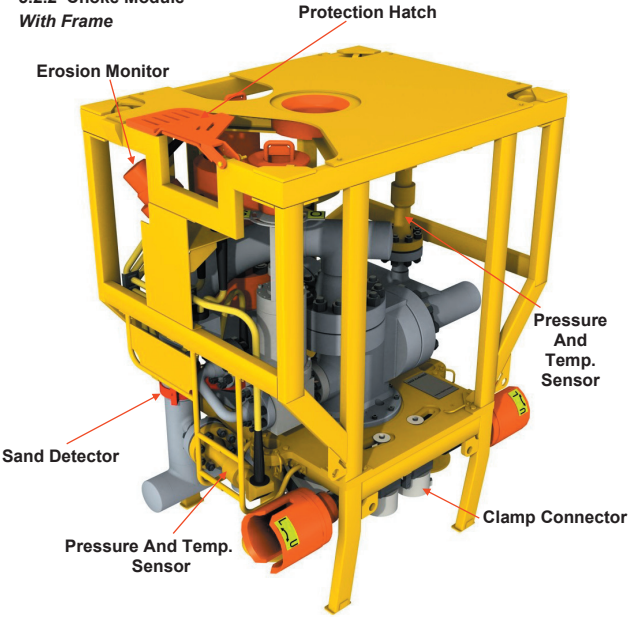

XT-SIDE

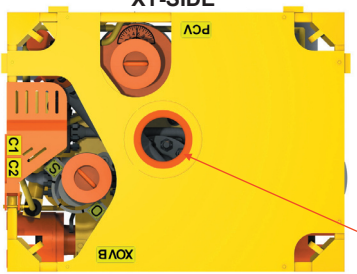

MANIFOLD-SIDE

Without Frame

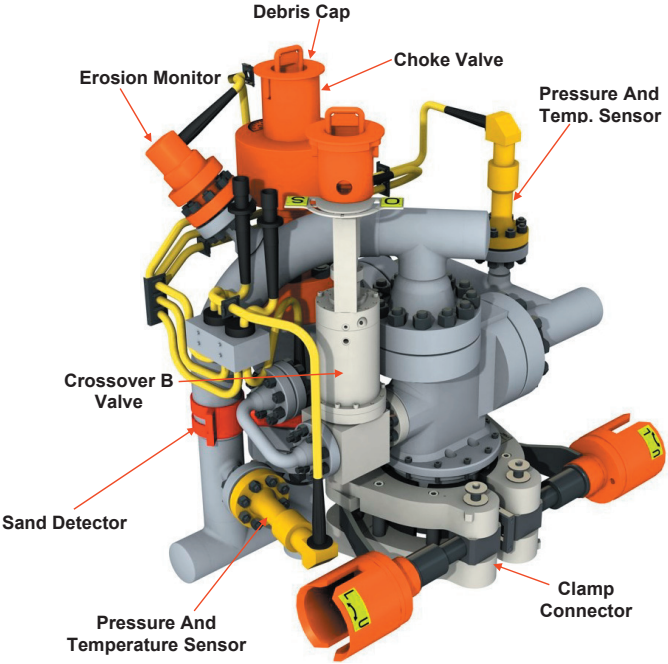

XT/ Choke Module Hub

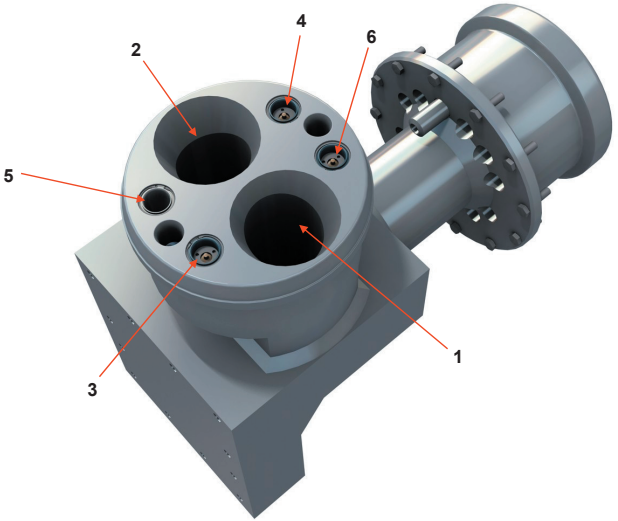

ID	Description	Size	Design Pressure (bar)	Check Valve
1	Production Outlet	6”	740	No
2	Production Inlet	6”	740	No
3	XOV B	3/8”	740	Yes
4	PCV-C	3/8”	345	Yes
5	Annulus Bleed	1-1/2”	780 (MSL)	No
6	PCV-O	3/8”	345	Yes

5.2.3 Tree Running Tool with Drill Pipe and Lifting Adapter

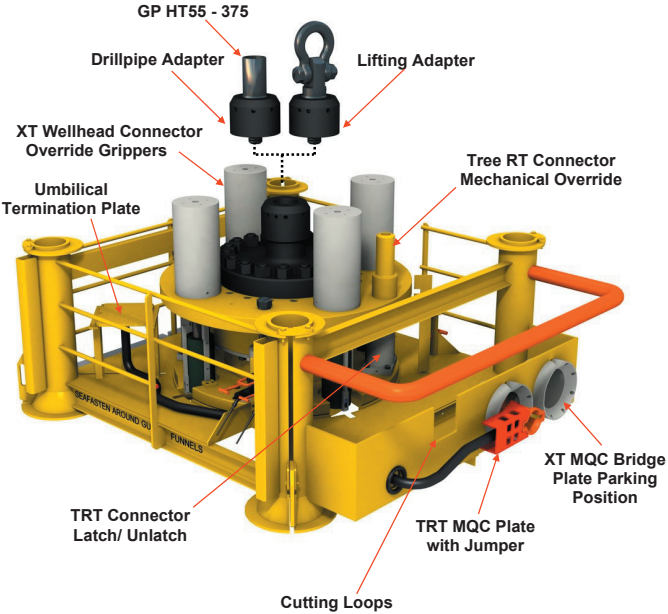

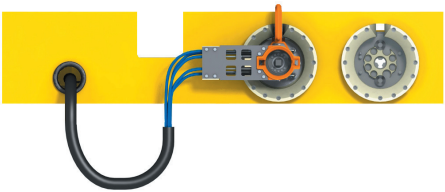

5.3 Tubing Hanger System

Tubing Hanger

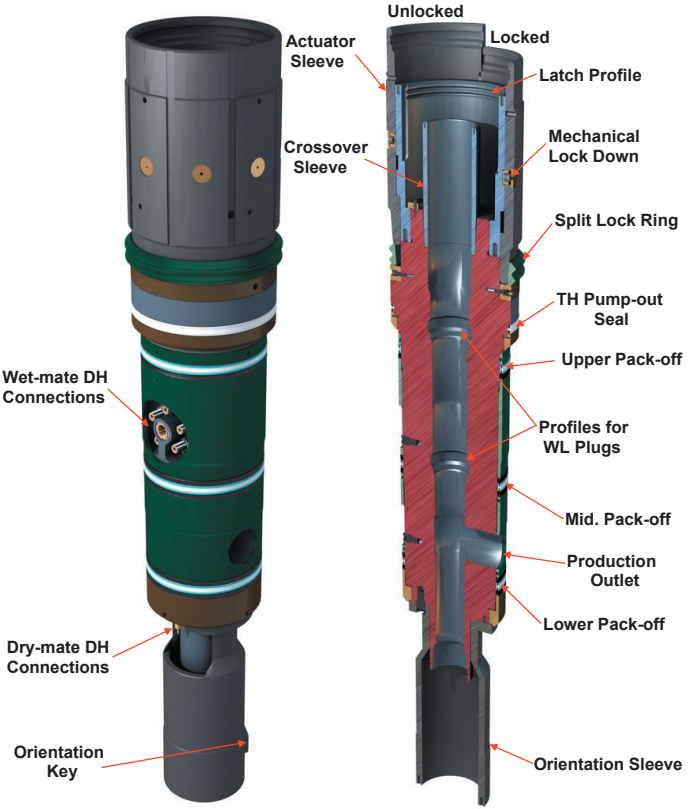

DH Couplers Detailed

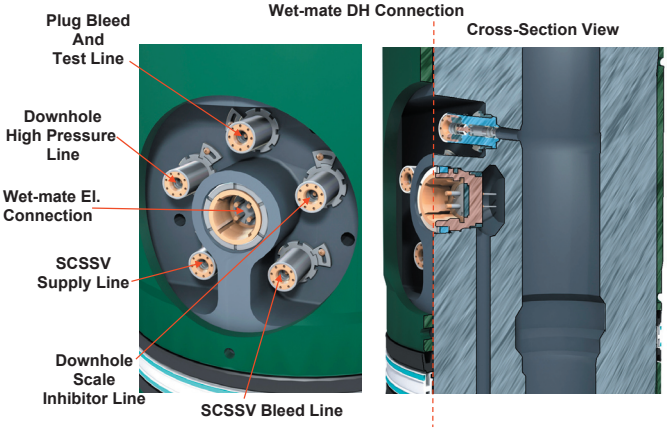

Dry-mate DH Connection - Bottom View

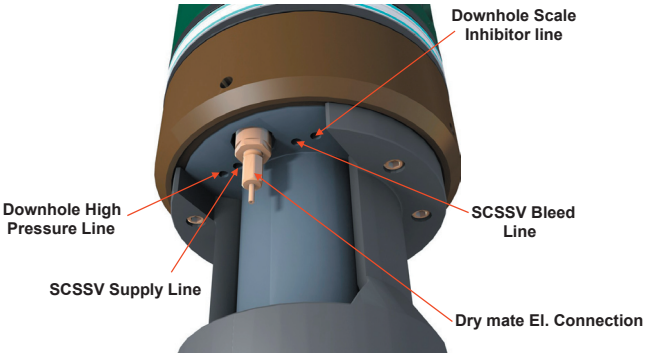

Tubing Hanger Running Tool

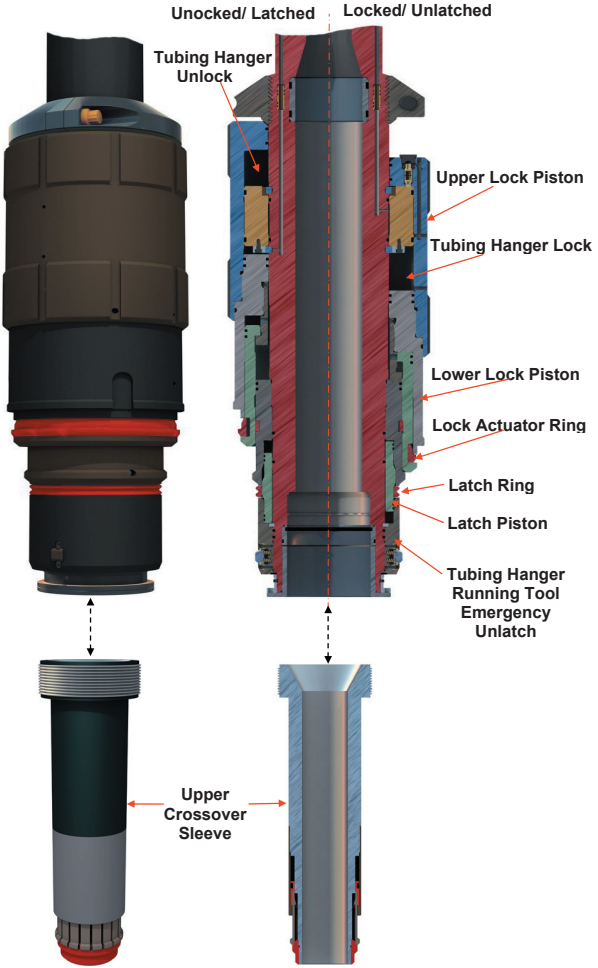

XT Bore Protector

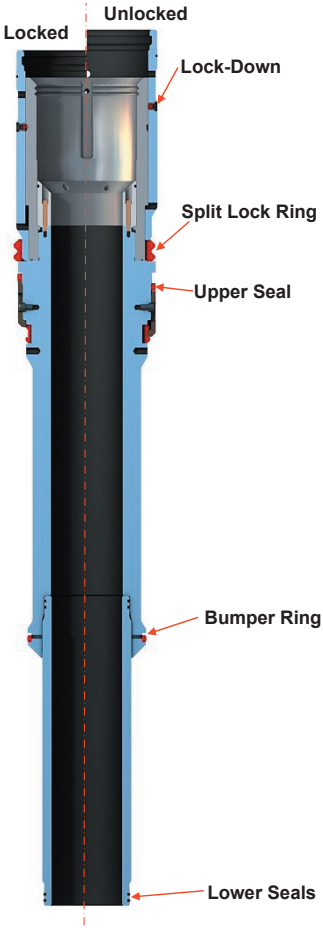

BP Running & Retrieval Tool (MST)

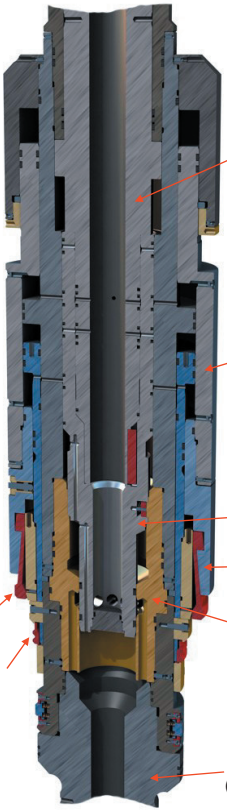

5.4 Debris Cap

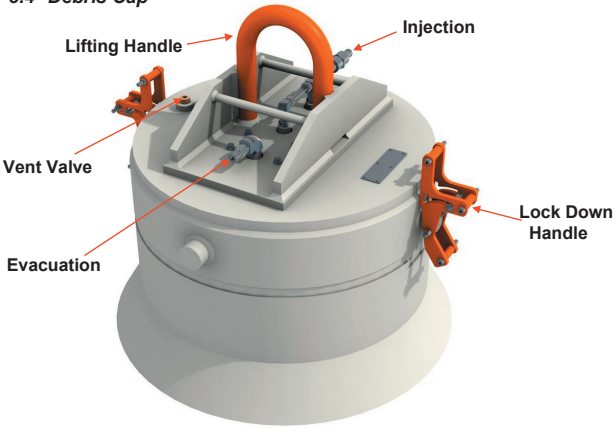

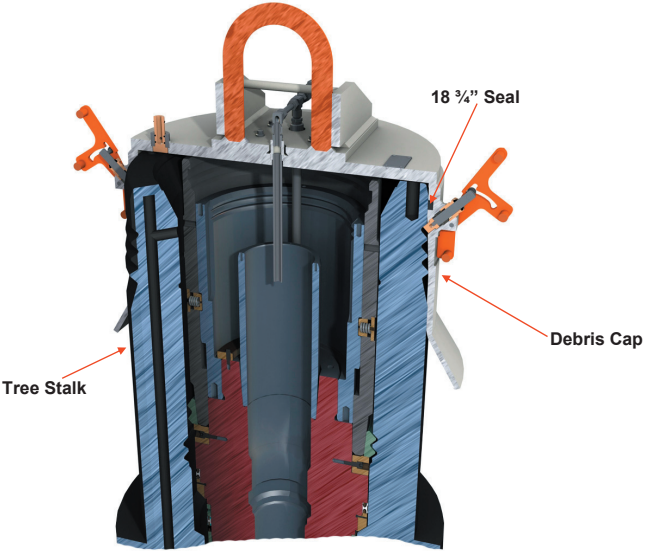

5.5 High Pressure Debris Cap w/ Detailed ROV Panel

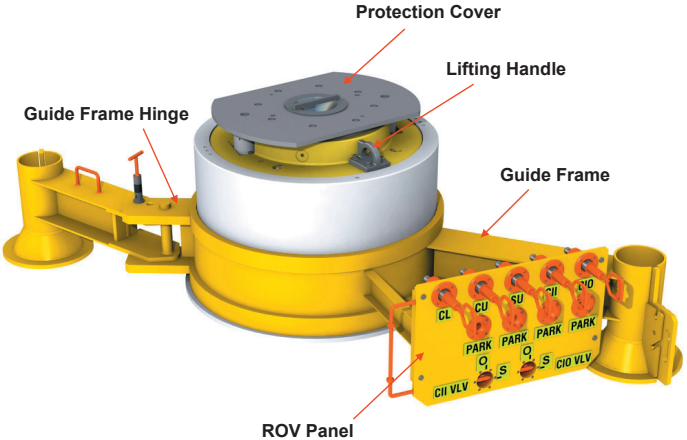

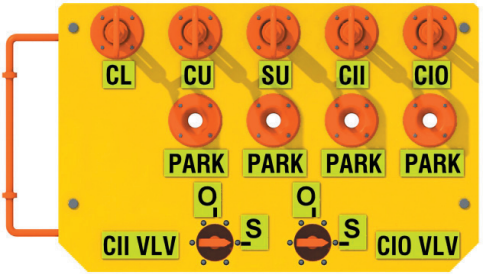

Flow Schematics High Pressure Debris Cap

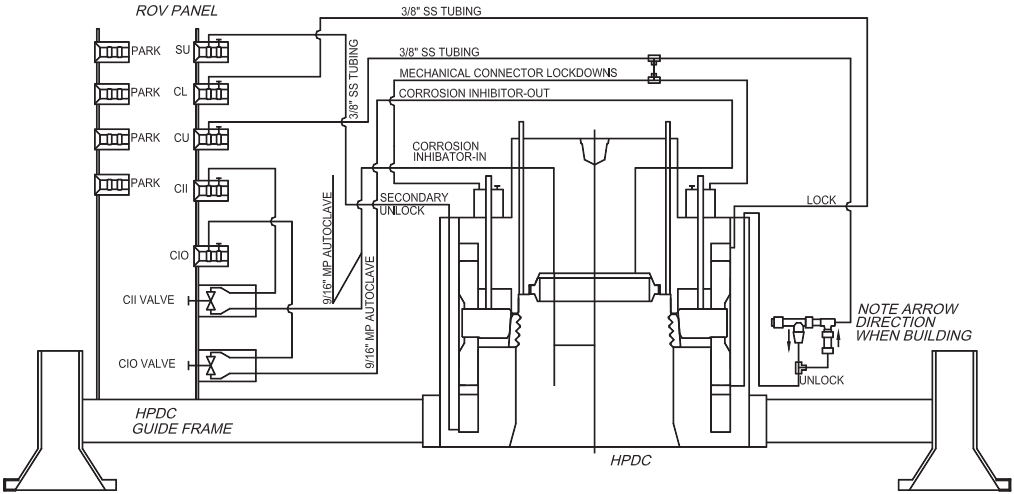

Table of Contents

6 Production Control System 72
6.1 Layout and Schematics 72
6.2 Temporary Abandoned Wells 87

6.1 Layout and Schematics - System Electrical Schematic (Dwg#: 10-KC0006-01, Sheet 1)

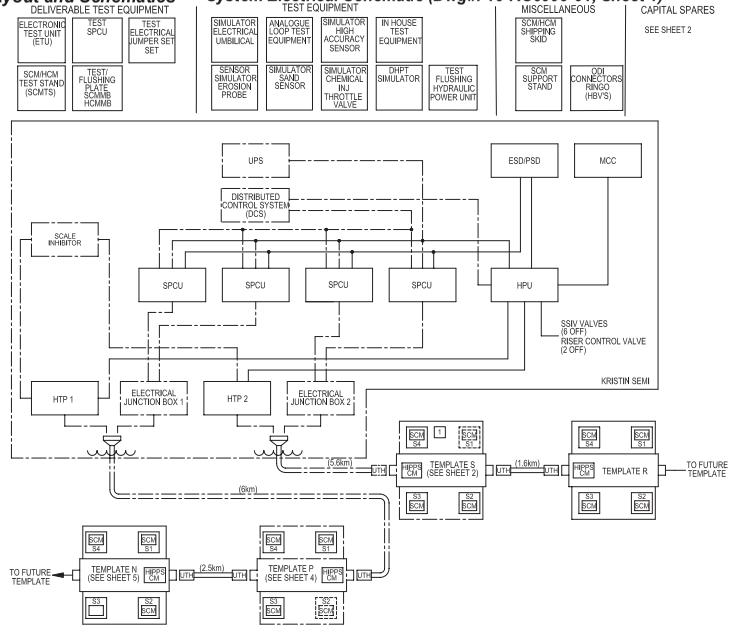

System Electrical Schematic (Dwg#: 24-KC0746-08, Sheet 1)

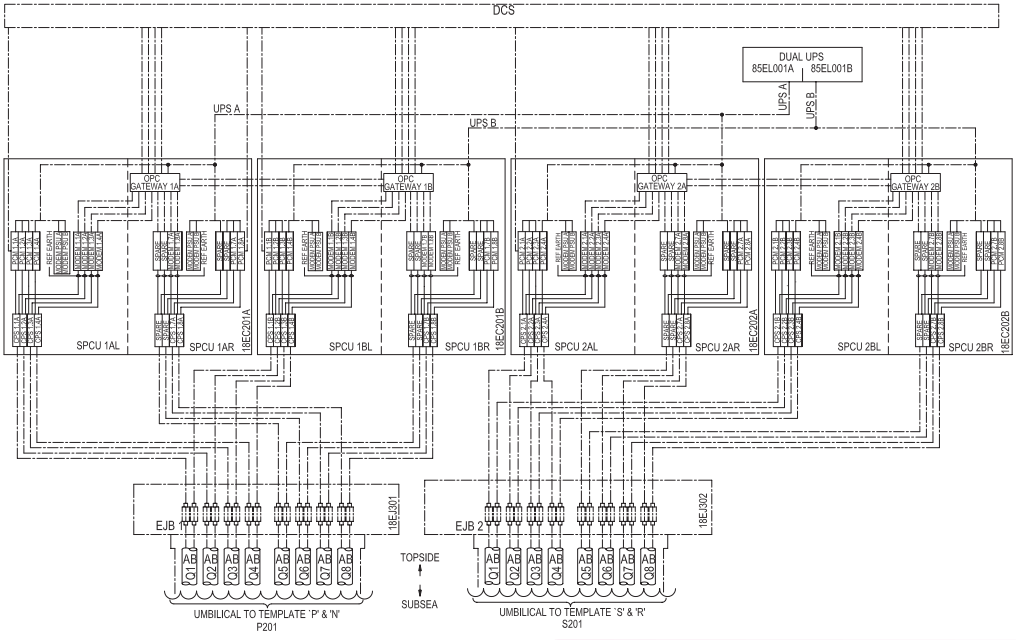

System Electrical Schematic (Dwg#: 24-KC0746-08, Sheet 2)

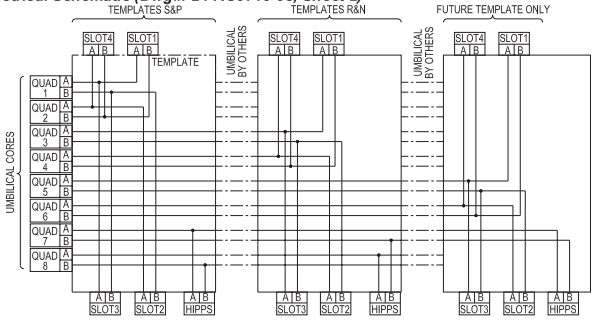

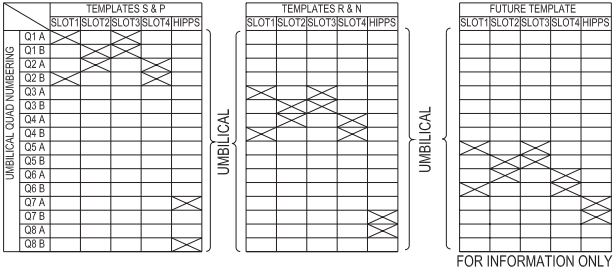

System Electrical Schematic (Dwg#: 10-KC0006-01)

NOTE: TYPICAL - REF: 10-KC0006-01 SHEET 3 - 5 & 7 - 8

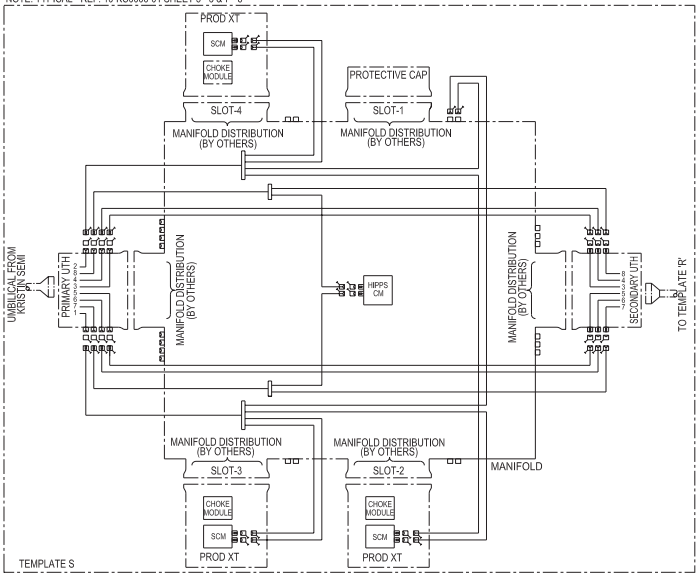

CAPITAL SPARES

SCM	HCM

CHOKE MODULE -2 OFF

SENSOR PRESSURE/ TEMPERATURE	EROSION MONITOR INTRUSIVE	SAND DETECTOR NON-INTRUSIVE	ELEC SENSOR JUMPER
ELEC SENSOR JUMPER	ROV DUMMY PLUG	ROV DUMMY PLUG 7 WAY	

XMAS TREE -1 OFF

SCMMB	SENSOR PRESSURE/ TEMPERATURE	CITV	HYDROCARBON LEAK DECT.
SENSOR PRESSURE	ELEC SENSOR JUMPER 1 WAY	ELEC JUMPER CITV 1 WAY	ELEC SENSOR JUMPER 7 W CONN
ELEC SENSOR JUMPER 12 W CONN	PARKING RECP 4/7 WAY ROV	ELEC PARKING RECEP 12 WAY ROV	ELEC PARKING PLUG 4 WAY ROV

System Electrical Schematic (Dwg#: 24-KC0746-08, Sheet 3)

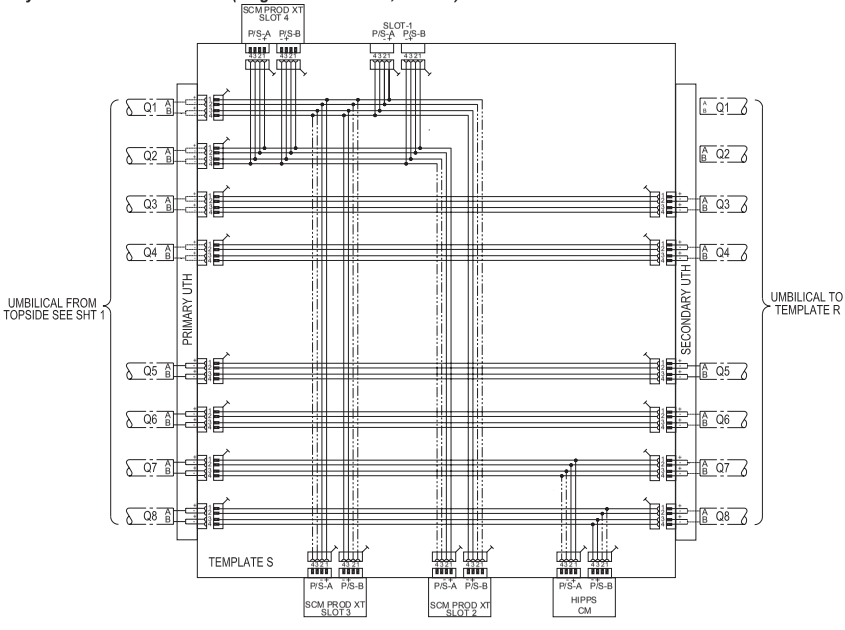

System Electrical Schematic (Dwg#: 24-KC0746-08, Sheet 7)

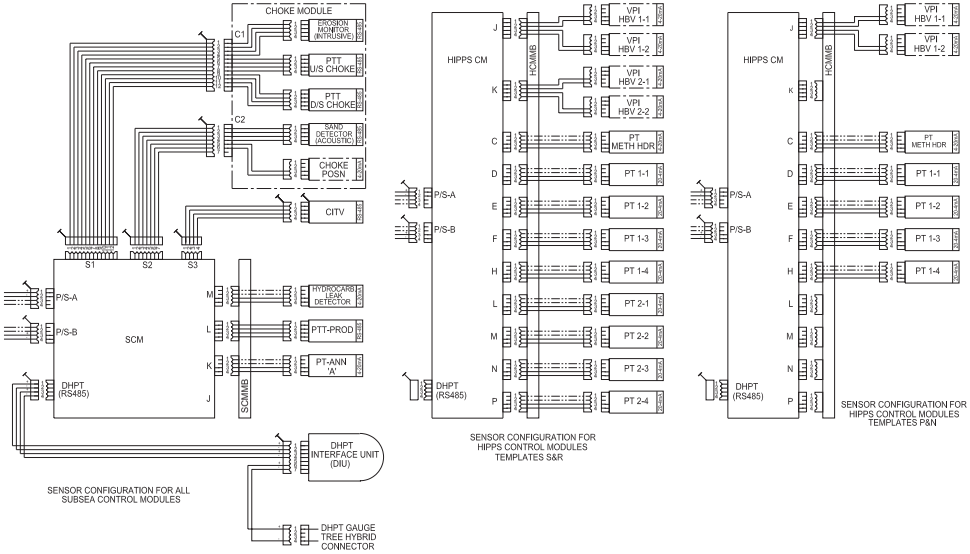

System Electrical Schematic HIPPS (Dwg#: 10-KC0006-01, Sheet 6)

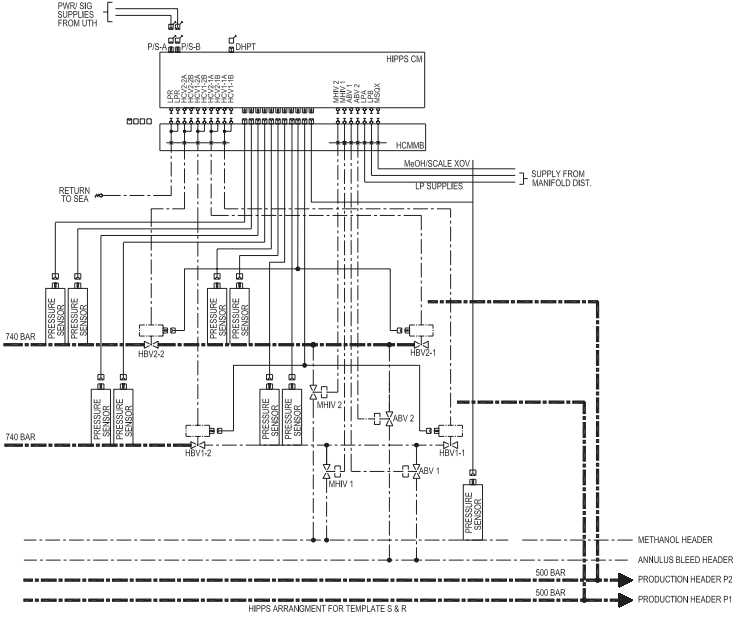

HIPPS ARRANGMENT FOR TEMPLATE S & R

System Electrical Schematic SCM (Dwg#: 10-KC0006-01, Sheet 8)

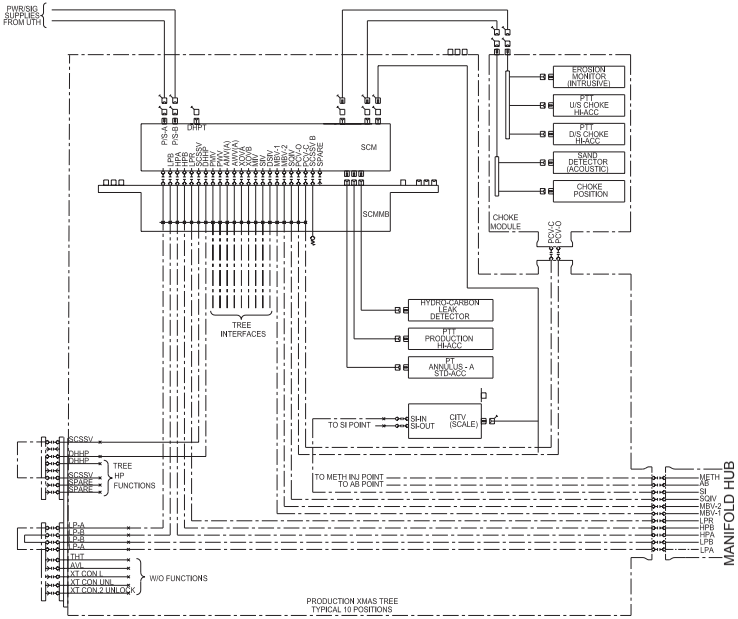

Static Umbilical Cross Section Layout (Dwg#: 11-NU4204-16, Sheet 2)

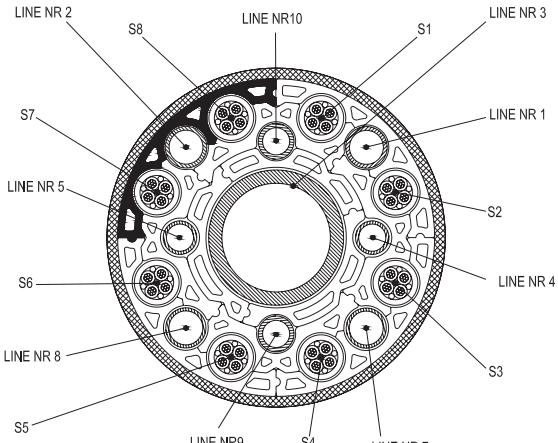

ID	Description	ID [Inch(mm)]	DP[psi(bar)]
1	Annulus Bleed A	5/8" (15,88)	10725 (740)
2	Annulus Bleed B	5/8" (15,88)	10725 (740)
3	MEG	2" (50,8)	10725 (740)
4	Scale Inhibitor A	½" (12,7)	10725 (740)
5	Scale Inhibitor B	½" (12,7)	10725 (740)
7	LP Hydraulic A	5/8" (15,88)	5580 (385)
8	LP Hydraulic B	5/8" (15,88)	5580 (385)
9	HP Hydraulic A	½" (12,7)	15000 (1035)
10	HP Hydraulic B	½" (12,7)	15000 (1035)

	Description	OD [mm]
S1	TQ 6 mm^2	21
S2	TQ 6 mm^2	21
S3	TQ 6 mm^2	21
S4	TQ 6 mm^2	21
S5	TQ 6 mm^2	21
S7	TQ 6 mm^2	21
S8	TQ 6 mm^2	21

Subsea Control Module (Dwg# 11-KC0343-19, Sheet 1 & 2)

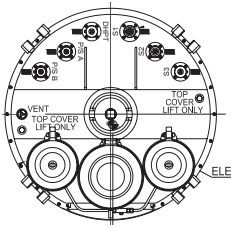

NOTES:
ACTUAL WEIGHT (OIL FILLED) IN AIR 2060kg
ESTIMATED WEIGHT (OIL FILLED) IN WATER 1470kg
NOMINAL APPLIED TORQUE: 1000Nm
MAXIMUM OVER TORQUE: 2000Nm
MAXIMUM HOT MATE CLAMPING FORCE: 100kN
MAXIMUM SEPERATION FORCE: 300kN
MAXIMUM VERTICAL MANDREL LOAD: 25kN
PRE-CHARGE ACCUMULATORS TO:
LP (ITEM 70): 190BAR @ 15 DEGREES CELCIUS
HP (ITEM 72): 548BAR @ 15 DEGREES CELCIUS

* TYPICAL SCM MODULE ADDRESS:

Orientation
Logo
Module Addresse A
Module Addresse B
Weight

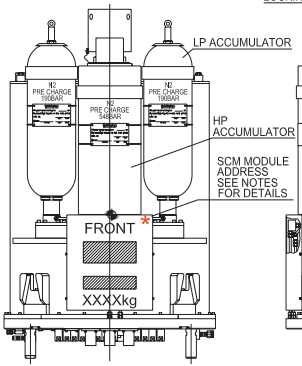

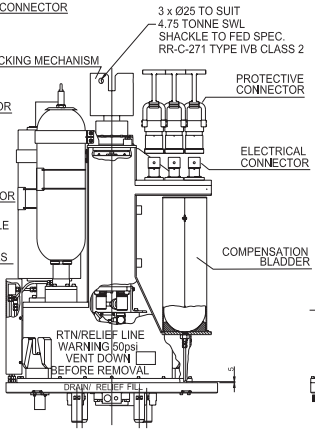

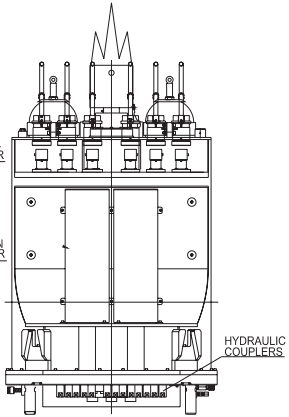

HIPPS Control Module (Dwg# 11-KC0343-20, Sheet A & B)

NOTES:
ACTUAL WEIGHT: (OIL FILLED) IN AIR 2185kg
ESTIMATED WEIGHT: (OIL FILLED) IN WATER 1370kg
RR-C-271 TYPE IVB CLASS 2

NOMINAL APPLIED TORQUE: 1000Nm
MAXIMUM OVER TORQUE: 2000Nm
MAXIMUM HOT MATE CLAMPING FORCE: 100kN
MAXIMUM SEPARATION FORCE: 300kN
MAXIMUM VERTICAL MANDRELL LOAD: 25kN
MONOLOCK ORIENTATION SHOWN IS AS PER THAT FOR SCM INSTALLATION

PRE CHARGE ACCUMULATORS TO:
LP: 190BAR @15 DEGREES CELCIUS

*TYPICAL HIPPS CONTROL MODULE MODULE ADRESS:

Orientation
Logo
Module Addresse A
Module Addresse B
Weight

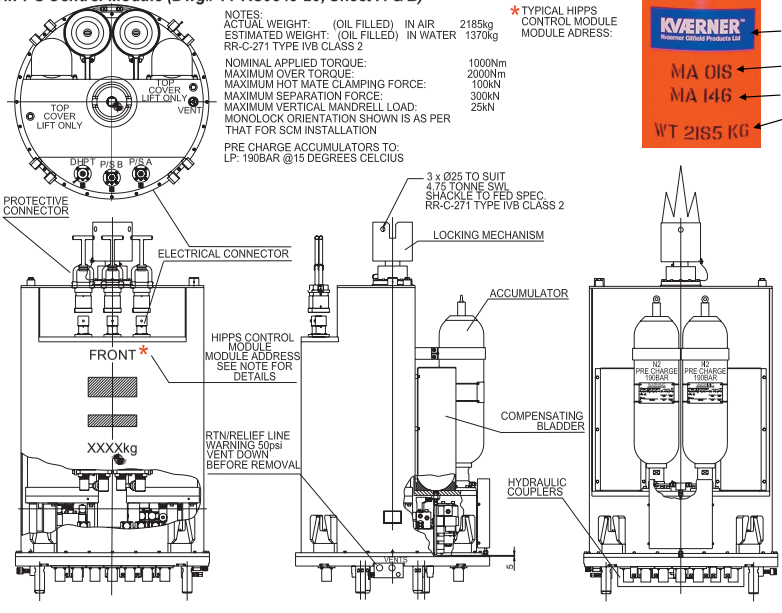

Hydraulic Flow Diagram – Subsea Control Module (Dwg#: 12-KC0097-08, Sheet 1 & 2)

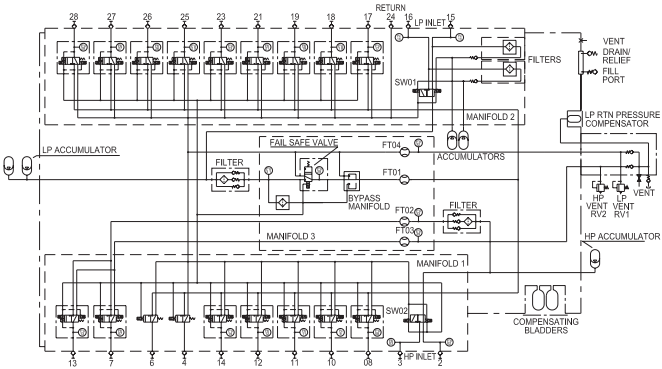

			PRODUCTION WELL	
SPE CODE	HP (bar)	DP (bar)	FUNCTIONS	ABBREV
2	930	1035	High Pressure Supply B	HPB
3	930	1035	High Pressure Supply A	HPA
4	345	379	Production Choke Valve (Closed)	PCV (C)
6	345	379	Production Choke Valve (Open)	PCV (0)
7	930	1035	Downhole HP Function	DHHP
8	345	379	Annulus Crossover Valve A Upstream Choke	XOVA
10	345	379	Surface Controlled Sub Surface Safety Valve Bleed	SCSSV.B.
11	345	379	Manifold Branch Valve 1	MBV1
12	345	379	Annulus Crossover Valve B Downstream Choke	XOVB
13	930	1035	Surface Controlled Subsurface Safety Valve Line	SCSSV
14	345	379	Manifold Branch Valve 2	MBV2
15	345	379	Low Pressure Supply B	LPB
16	345	379	Low Pressure Supply A	LPA
17	345	379	Downhole Scale Valve	DSIV
18	345	379	Production Master Valve	PMV
19	345	379	Scale Squeeze Isolation Valve	SQIV
21	345	379	Scale Inhibitor Isolation Valve	SIV
23	345	379	Methanol Injection Valve	MIV
24	90	100	Low Pressure Return	LPR
25	345	379	Workover Valve	WOV
26	345	379	Production Wing Valve	PWV
27	345	379	Annulus Wing Valve - A	AWV-A
28	345	379	Annulus Master Valve - A	AMV-A

Hydraulic Flow Diagram – HIPPS Control Module (Dwg#: 12-KC0097-09, Sheet 1 & 2)

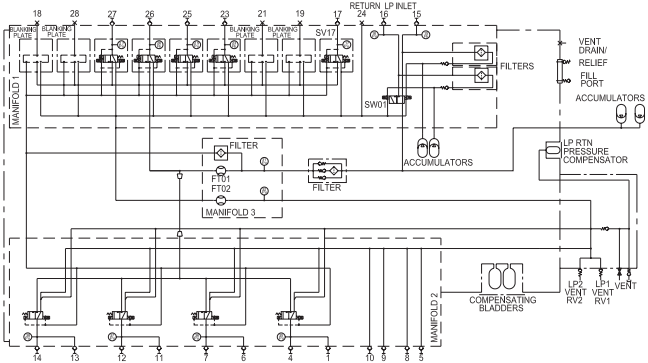

			MANIFOLD HCM	
LINE NO#	WP (bar)	DP (bar)	FUNCTIONS	ABBREV
1	345	379	HIPPS Barrier Valve	HBV2-2
4	345	379	HIPPS Barrier Valve	
5	90	100	Low Pressure Return - D	LPR-D
6	345	379	HIPPS Barrier Valve	HBV2-1
7	345	379	HIPPS Barrier Valve	
8	90	100	Low Pressure Return - B	LPR-B
9	90	100	Low Pressure Return - C	LPR-C
10	90	100	Low Pressure Return - A	LPR-A
11	345	379	HIPPS Barrier Valve	HBV1-2
12	345	379	HIPPS Barrier Valve	
13	345	379	HIPPS Barrier Valve	HBV1-1
14	345	379	HIPPS Barrier Valve	
15	345	379	Low Pressure Supply B	LPB
16	345	379	Low Pressure Supply A	LPA
17	345	379	Methanol Scale Squeeze Cross Over Valve	MSQX
18	345	379	Blank	-
19	345	379	Blank	-
21	345	379	Blank	-
23	345	379	Annulus Bleed Valve 1	ABV 1
24	345	379	Blank	-
25	345	379	Methanol Header Isolation Valve One	MHIV 1
26	345	379	Annulus Bleed Valve 2	ABV 2
27	345	379	Methanol Header Isolation Valve Two	MHIV 2
28	345	379	Blank	-

Kristin HIPPS Block Diagram (Dwg#: 24-KC0559-01, Sheet B) (Valid for R&S Manifold Only)

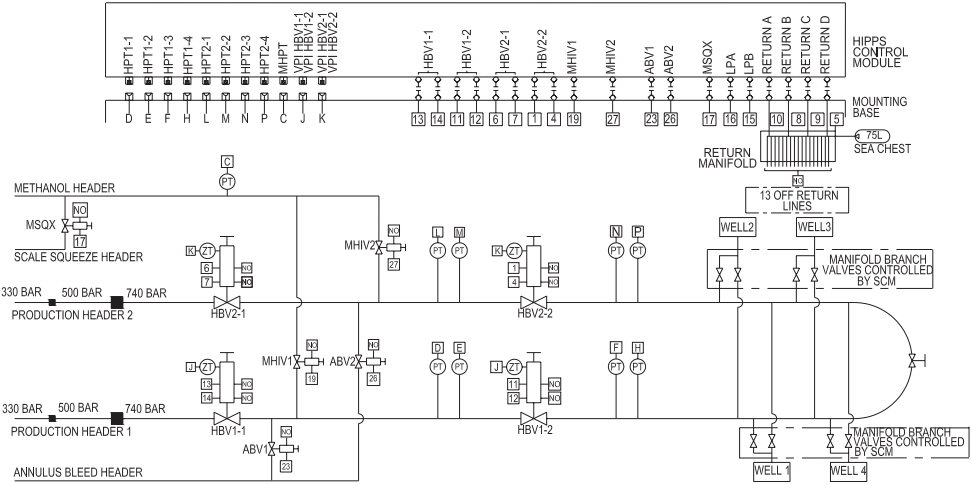

System Hydraulic Schematic (Dwg#: 12-KC0038-13, Sheet 1)

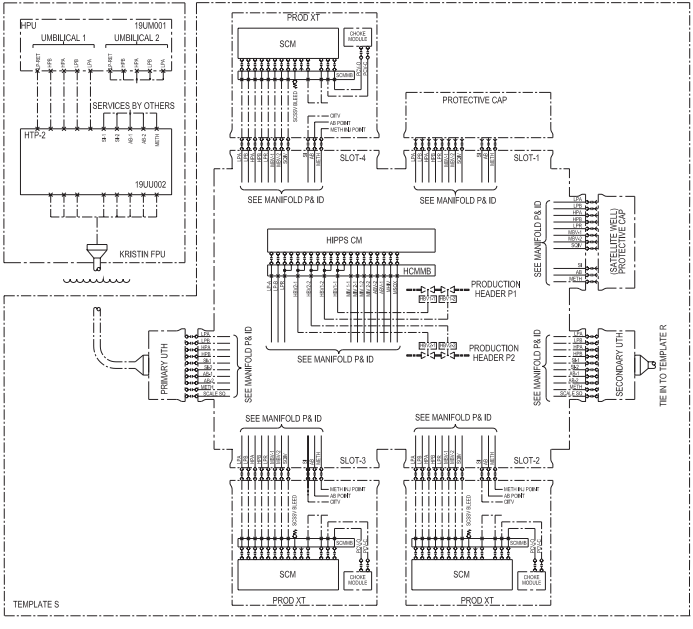

6.2 Temporary Abandoned Wells

Equipment For Monitoring Temporary Abando|ned Wells
(Dwg# 11-KC0123-03, Sheet 1)

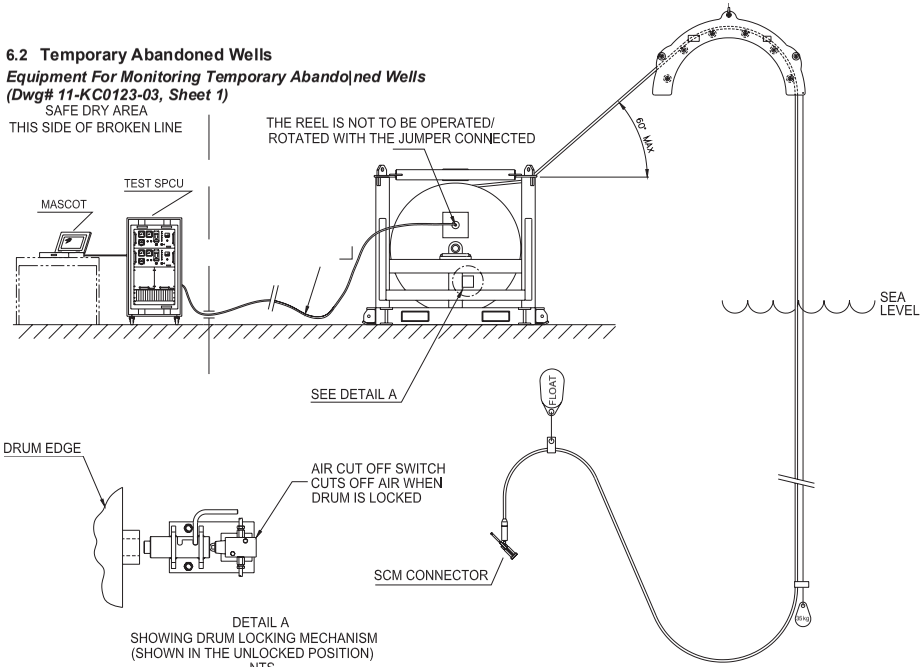

Table of Contents

7 Work Over System....91
7.1 WOCS Layout and Schematics....91
7.2 Operating Volumes....98
7.3 Shut down sequences....101
7.4 Kristin Workover Riser System....104

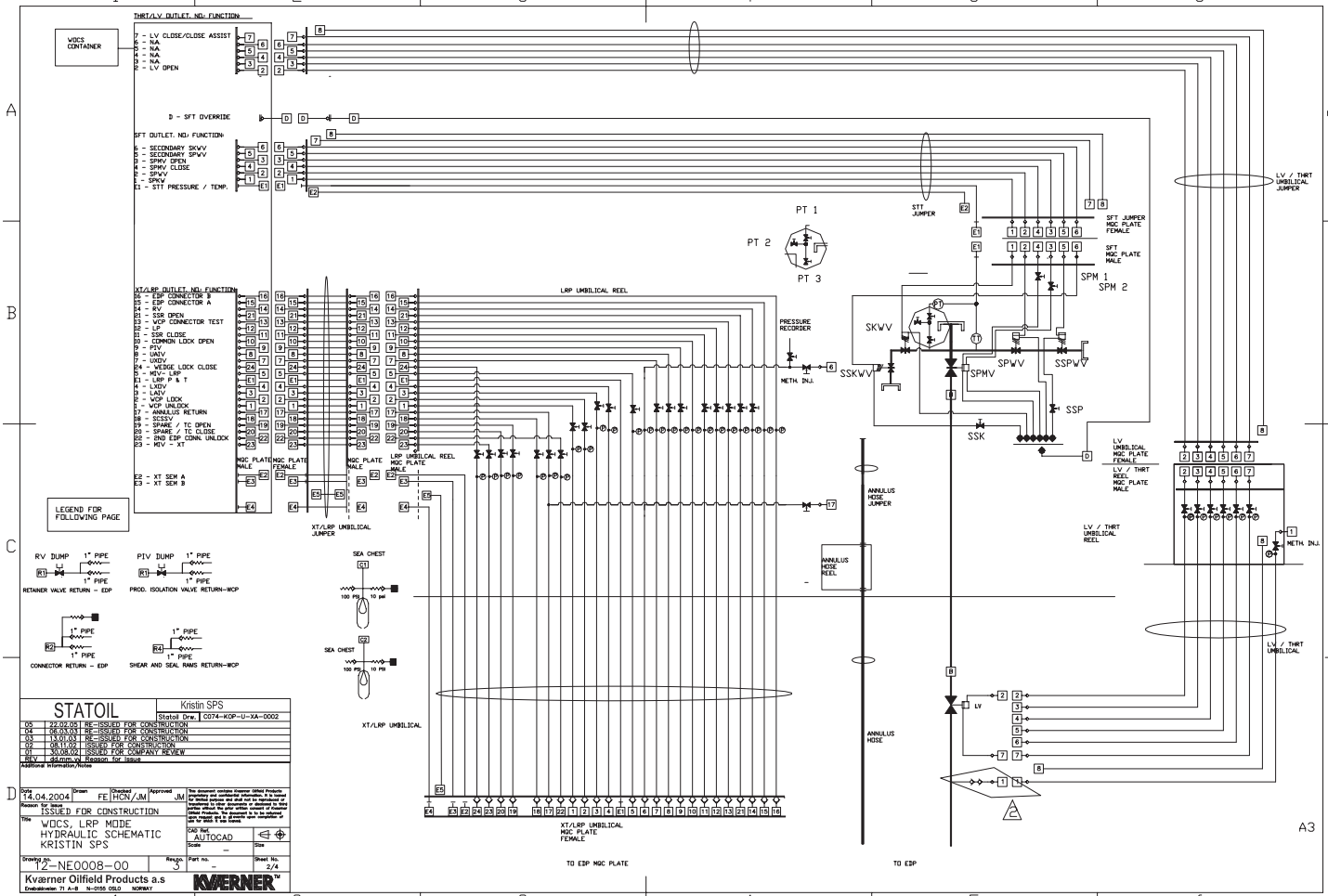
THRT/LV OUTLET. NO. FUNCTION
WOCS CONTAINER
7 - LV CLOSE/CLOSE ASSIST
6 - NA
5 - NA
4 - NA
3 - NA
2 - LV OPEN
D - SFT OVERRIDE
SFT OUTLET. NO. FUNCTION
6 - SECONDARY SKWV
5 - SECONDARY SPWV
4 - SPMV OPEN
3 - SPMV CLOSE
2 - SPWV
1 - SPKV
E1 - STT PRESSURE / TEMP.
XT/LRP OUTLET. NO. FUNCTION
16 - EDP CONNECTOR B
15 - EDP CONNECTOR A
14 - RV
21 - SSR OPEN
13 - WCP CONNECTOR TEST
12 - LP
11 - SSR CLOSE
10 - COMMON LOCK OPEN
9 - PTV
8 - UAIV
7 - UXIV
24 - WEDGE LOCK CLOSE
5 - MTV- LRP
E1 - LRP P & T
4 - LXIV
3 - LAIV
2 - WCP LOCK
1 - WCP UNLOCK
17 - ANNULUS RETURN
18 - SCSSV
19 - SPARE / TC OPEN
20 - SPARE / TC CLOSE
22 - END EDP CONN UNLOCK
23 - MTV - XT
E2 - XT SEM A
E3 - XT SEM B
MGC PLATE MALE
MGC PLATE FEMALE
LEGEND FOR FOLLOWING PAGE
RV DUMP
1" PIPE
RETAINER VALVE RETURN - EDP
PIV DUMP
PROD. ISOLATION VALVE RETURN-WCP
CONNECTOR RETURN - EDP
SHEAR AND SEAL RAMS RETURN-WCP
SEA CHEST
100 PSI
10 psi
XT/LRP UMBILICAL
XT/LRP UMBILICAL JUMPER
LRP UMBILICAL REEL
LRP UMBILICAL REEL MGC PLATE MALE
PT 1
PT 2
PT 3
PRESSURE RECORDER
METH. INJ.
STT JUMPER
SFT JUMPER MGC PLATE FEMALE
SFT MGC PLATE MALE
SPM 1
SPM 2
SKWV
SSKWV
SPMV
SPWV
SSPWV
SSP
SSK
ANNULUS HOSE JUMPER
ANNULUS HOSE REEL
ANNULUS HOSE
LV / THRT UMBILICAL JUMPER
LV UMBILICAL MGC PLATE FEMALE
LV / THRT REEL MGC PLATE MALE
LV / THRT UMBILICAL REEL
LV / THRT UMBILICAL
XT/LRP UMBILICAL MGC PLATE FEMALE
TO EDP MGC PLATE
TO EDP
A3
STATOIL
Kristin SPS
Statoil Drw. C074-KOP-U-XA-0002
05 22.02.05 RE-ISSUED FOR CONSTRUCTION
04 06.03.03 RE-ISSUED FOR CONSTRUCTION
03 13.01.03 RE-ISSUED FOR CONSTRUCTION
02 08.11.02 ISSUED FOR CONSTRUCTION
01 30.08.02 ISSUED FOR COMPANY REVIEW
REV dd.mm.yy Reason for issue
Additional information/Notes
Date 14.04.2004
Drawn FE
Checked HCN
Approved JM
Reason for issue ISSUED FOR CONSTRUCTION
Title WOCS, LRP MODE HYDRAULIC SCHEMATIC KRISTIN SPS
CAD Ref. AUTOCAD
Scale —
Size
Drawing no. 12-NE0008-00
Rev. 3
Part no. -
Sheet No. 2/4
Kværner Oilfield Products a.s
Enebakkveien 71 A-B N-0255 OSLO NORWAY
KVÆRNER

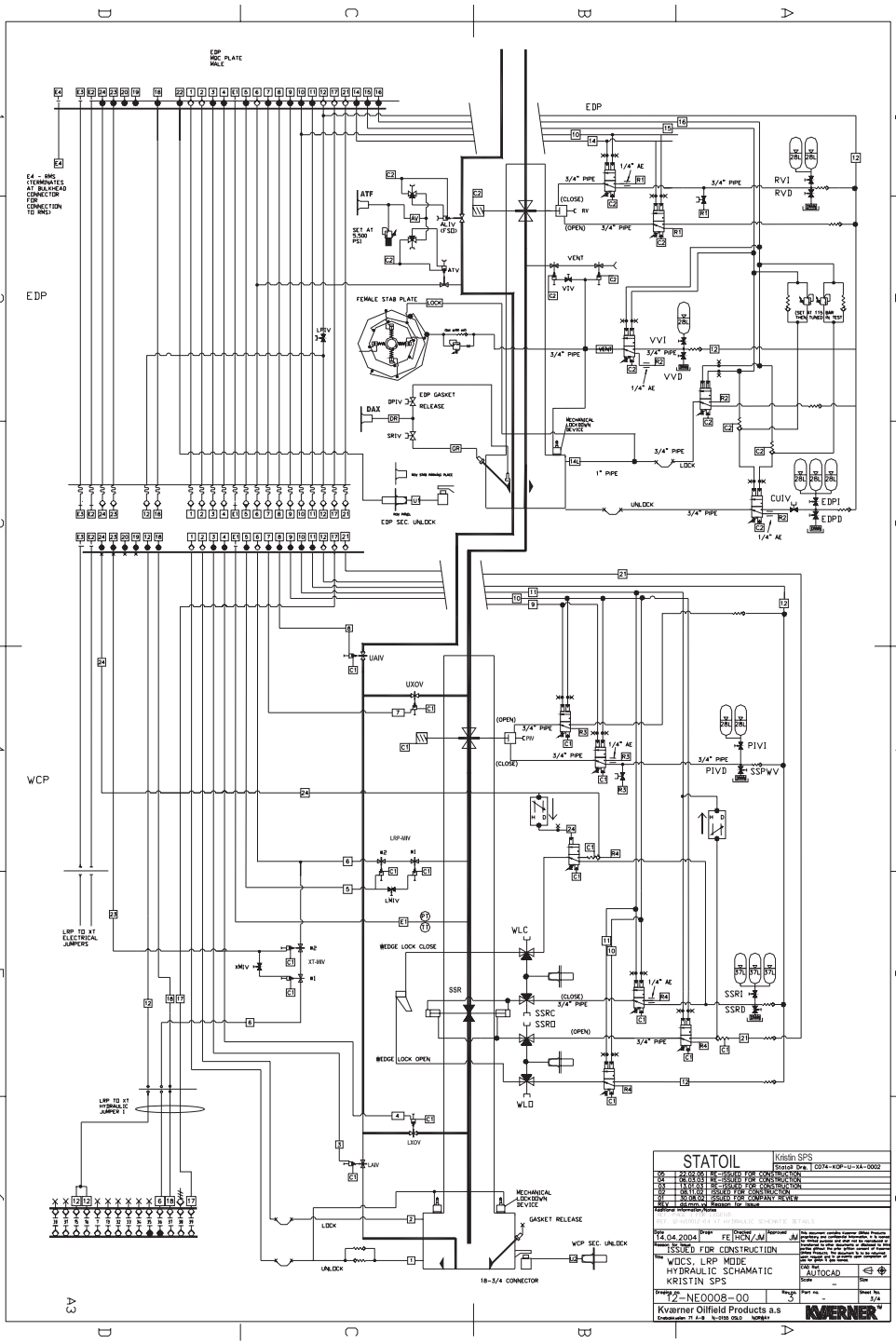
EDP
WCP
EDP WDC PLATE MALE
E4 - RMS (TERMINATES AT BULKHEAD CONNECTOR FOR CONNECTION TO RMS)
ATF
SET AT 3,500 PSI
ALIV (FSD)
ATV
VENT
VIV
FEMALE STAB PLATE
LOCK
LPIV
EDP GASKET RELEASE
DPIV
DAX
SRIV
MECHANICAL LOCKDOWN DEVICE
EDP SEC. UNLOCK
3/4" PIPE
1/4" AE
RV
(CLOSE)
(OPEN)
RVI
RVD
VVI
VVD
1" PIPE
UNLOCK
CUIV
EDPI
EDPD
UAIV
UXOV
CPIV
PIVI
PIVD
SSPWV
LRP-MIV
LMIV
XMIV
XT-MIV
LRP TO XT ELECTRICAL JUMPERS
WEDGE LOCK CLOSE
WLC
SSR
SSRC
SSRO
SSRI
SSRD
WEDGE LOCK OPEN
WLO
LRP TO XT HYDRAULIC JUMPER 1
LXOV
LAIV
MECHANICAL LOCKDOWN DEVICE
GASKET RELEASE
WCP SEC. UNLOCK
18-3/4 CONNECTOR
STATOIL
Kristin SPS
Statoil Dra. C074-KOP-U-XA-0002
05 22.09.05 RE-ISSUED FOR CONSTRUCTION
04 26.03.03 RE-ISSUED FOR CONSTRUCTION
03 14.01.03 RE-ISSUED FOR CONSTRUCTION
02 08.11.02 ISSUED FOR CONSTRUCTION
01 30.08.02 ISSUED FOR COMPANY REVIEW
REV. Description of Issue
Additional Information/Notes
Date 14.04.2004
Drawn FE
Checked HCN/JM
Approved JM
ISSUED FOR CONSTRUCTION
Title WDCS, LRP MODE HYDRAULIC SCHAMATIC KRISTIN SPS
CAD Ref AUTOCAD
Scale --
Size
Drawing no. 12-NE0008-00
Rev. no. 5
Part no. --
Sheet No. 3/4
Kværner Oilfield Products a.s
Strandveien 71 A-B N-1366 OSLO NORWAY
KVÆRNER

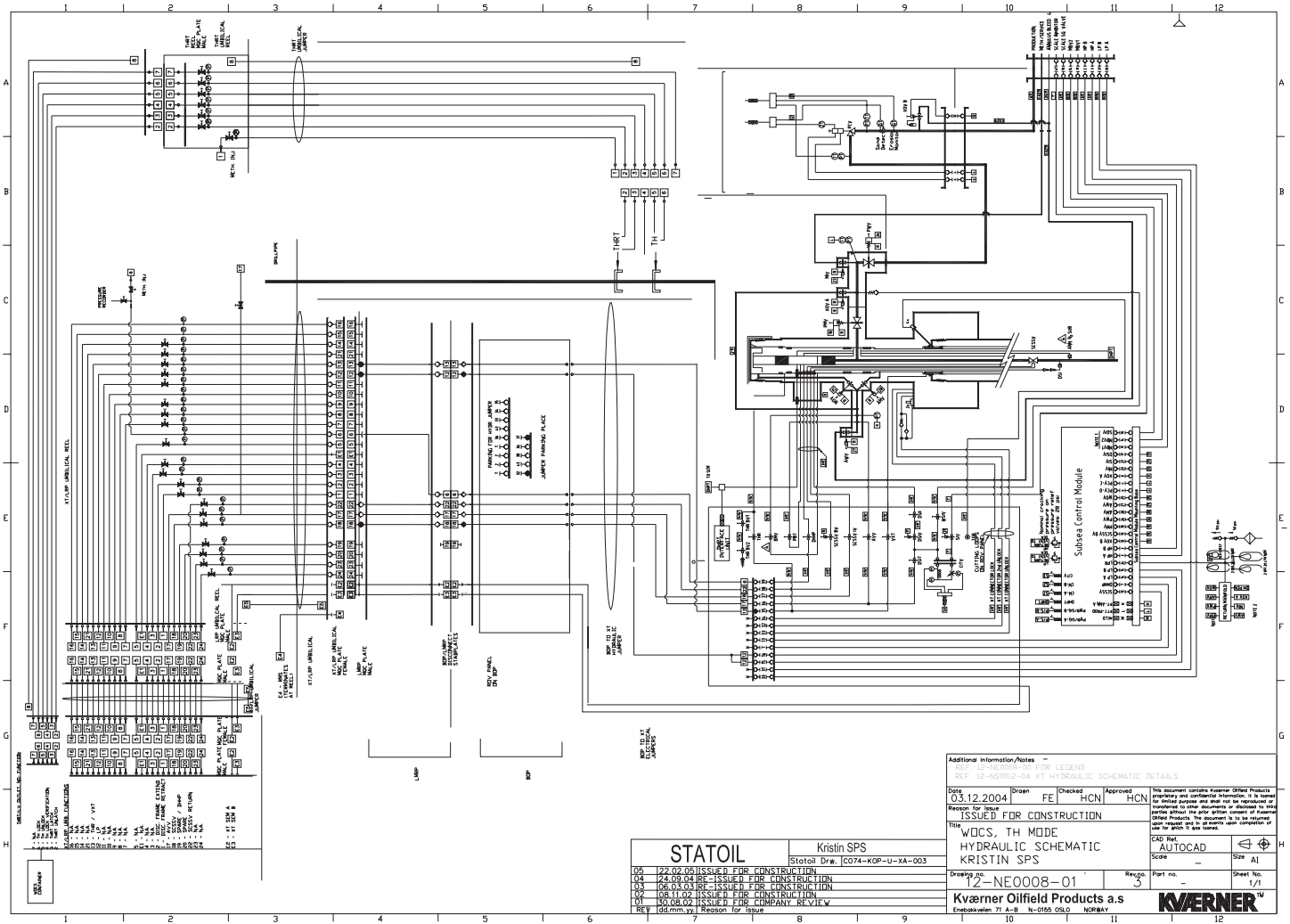
Subsea Control Module
THRT
TH
JUMPER PANNING PLACE
PANNING FOR WCM JUMPER
XT/LMP UMBILICAL REEL
LMP
WCM
Additional Information/Notes
REF. 12-NS0012-04 SYMBOLS FOR LEGEND
REF. 12-NS0012-04 XT HYDRAULIC SCHEMATIC DETAILS
Date 03.12.2004
Drawn FE
Checked HCN
Approved HCN
Reason for issue
ISSUED FOR CONSTRUCTION
Title
WDCS, TH MODE
HYDRAULIC SCHEMATIC
KRISTIN SPS
CAD Ref. AUTOCAD
Scale –
Size A1
Drawing no. 12-NE0008-01
Revno. 3
Part no. –
Sheet No. 1/1
Kværner Oilfield Products a.s
Enebakkveien 71 A-B N-0155 OSLO NORWAY
KVÆRNER
STATOIL
Kristin SPS
Statoil Drw. C074-KOP-U-XA-003
REV dd.mm.yy. Reason for issue
05 22.02.05 ISSUED FOR CONSTRUCTION
04 24.09.04 RE-ISSUED FOR CONSTRUCTION
03 06.03.03 RE-ISSUED FOR CONSTRUCTION
02 08.11.02 ISSUED FOR CONSTRUCTION
01 30.08.02 ISSUED FOR COMPANY REVIEW
This document contains Kværner Oilfield Products proprietary and confidential information. It is loaned for limited purpose and shall not be reproduced or transferred to other documents or disclosed to third parties without the prior written consent of Kværner Oilfield Products. The document is to be returned upon request and in all events upon completion of use for which it was loaned.

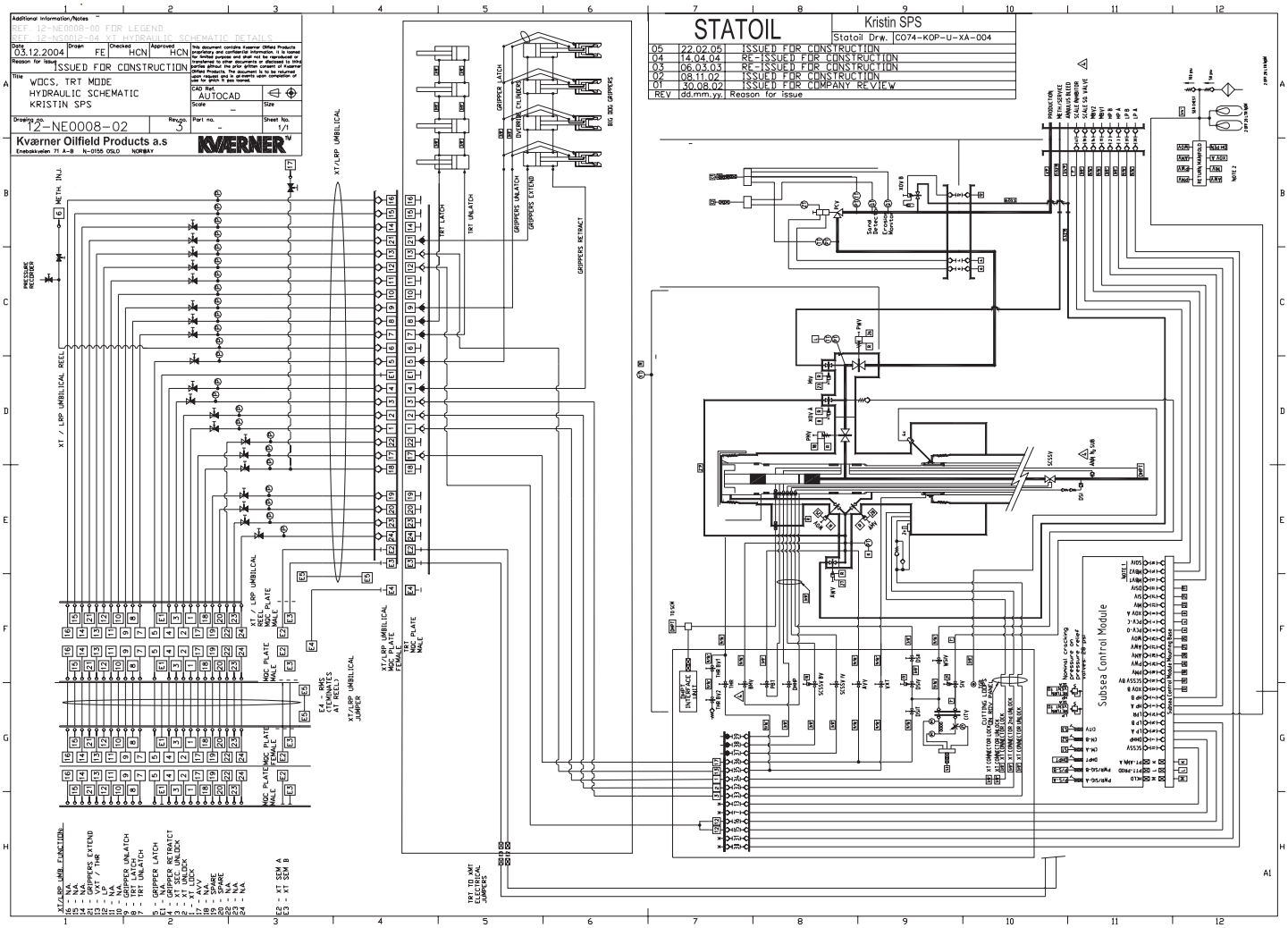
STATOIL
Kristin SPS
Statoil Drw. C074-KOP-U-XA-004
05 22.02.05 ISSUED FOR CONSTRUCTION
04 14.04.04 RE-ISSUED FOR CONSTRUCTION
03 06.03.03 RE-ISSUED FOR CONSTRUCTION
02 08.11.02 ISSUED FOR CONSTRUCTION
01 30.08.02 ISSUED FOR COMPANY REVIEW
REV dd.mm.yy. Reason for issue
Additional Information/Notes
REF. 12-NE0008-00 FOR LEGEND
REF. 12-NE0010-04 XT HYDRAULIC SCHEMATIC DETAILS
Date 03.12.2004
Drawn FE
Checked HCN
Approved HCN
Reason for Issue ISSUED FOR CONSTRUCTION
Title WOCS, TRT MODE HYDRAULIC SCHEMATIC KRISTIN SPS
CAD Ref. AUTOCAD
Scale –
Size
Drawing no. 12-NE0008-02
Revgr. 3
Part no. –
Sheet No. 1/1
Kværner Oilfield Products a.s
Enebakkveien 71 A-B N-0155 OSLO NORWAY
KVÆRNER
Subsea Control Module
XT / LRP UMBILICAL REEL
XT/LRP UMBILICAL
GRIPPER LATCH
GRIPPERS EXTEND
GRIPPERS RETRACT
TRT LATCH
TRT UNLATCH
BIG 300 GRIPPERS
NOTE 1
NOTE 2

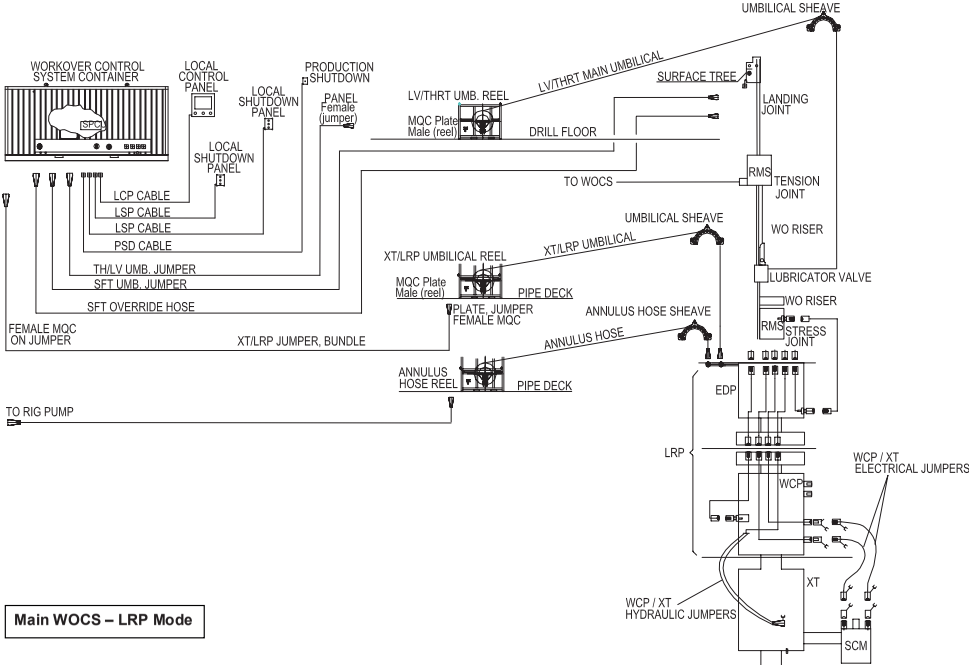

Main WOCS – LRP Mode

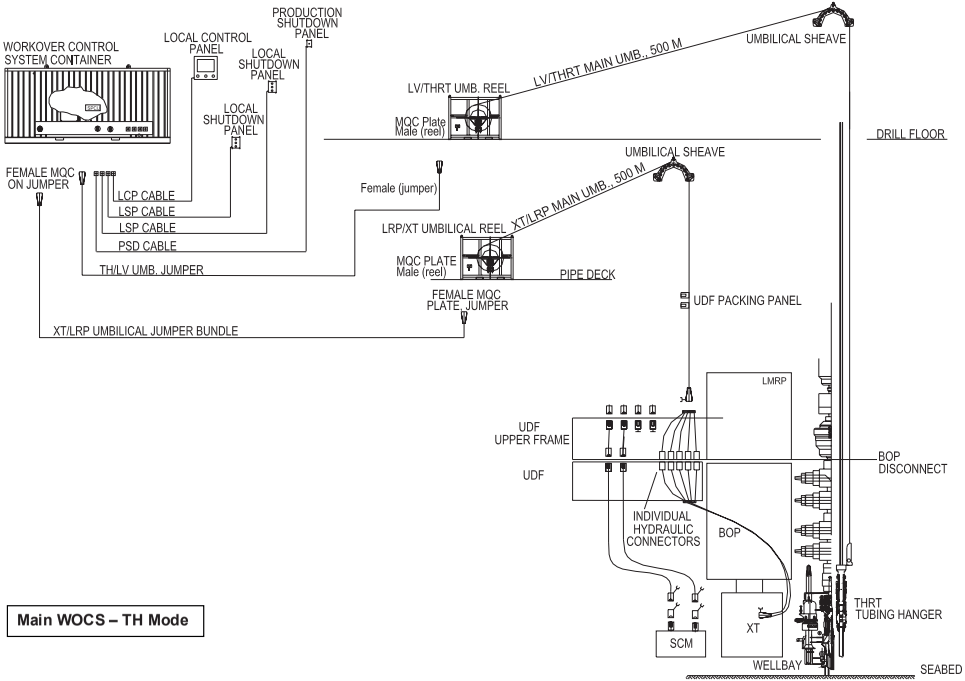

Main WOCS – TH Mode

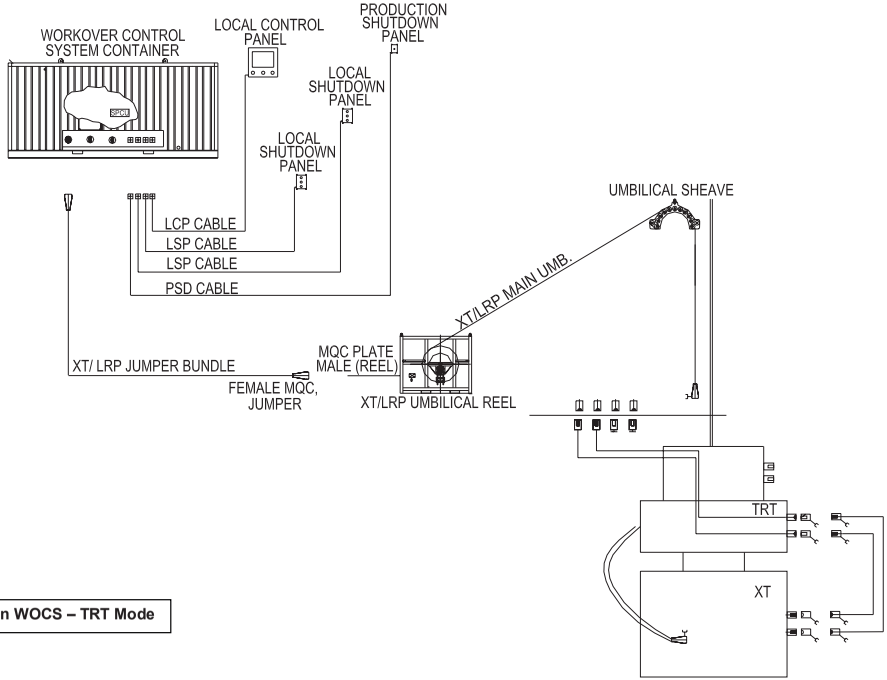

Main WOCS – TRT Mode

7.2 Operating Volumes

	Line No.	Line size (in.)	WP (bar)	LRP mode	Op. vol. (liter)	Hydr. Fluid (1)
SFT Jumper	1	1/4"	345	SKWV	1.5	EE1
	2	1/2"	345	SPWV	1.5	EE1
	3	1/4"	345	SPMV OPEN	9.5	EE1
	4	1/4"	345	SPMV CLOSE	8.5	EE1
	5	1/4"	345	SSPWV	1.5	EE1
	6	1/4"	345	SSKWV	1.5	EE1
	7	1/4"	345	SPARE	NA	EE1
	8	1/4"	345	SPARE	NA	EE1

	Line No.	LRP Mode	Type	Conductor cross-section [sqmm]
SFT Jumper-Electrical lines	E1	SFT P & T	QUAD	4
	E2	SPARE	QUAD	4

	Line No.	Line size (in.)	WP (bar)	LRP mode	Op. vol. (liter)	TH Mode	Op. vol. (liter)**	Hydr. Fluid (1)
LV/ THRT Umbilical	1	3/8"	1035	Methanol Injection	NA	NA	NA	MEG/ Meth. EE1
	2	1/4"	210*/ 345	LV open	4l at 80bar 5.5l at 690bar	THRT Unlatch	1.7/ 0.7	EE1
	3	1/4"	345	NA	NA	THRT latch	1.7/ 0.7	EE1
	4	1/4"	345	NA	NA	TH Lock verific.	NA	EE1
	5	1/4"	345	NA	NA	TH Unlock	12.8/ 7.2	EE1
	6	1/4"	345	NA	NA	TH Lock	7.8/ 10	EE1
	7	1/4"	0-690	Close/ Close Assist	4l at 80bar 5l at 345bar	NA	NA	EE1
	8	3/8"	1035	SPARE	NA	SPARE	NA	MEG/ Meth. EE1

* = Pressure limited to 210bar in LRP Mode
** = The operation vol. is written: Supply/ Return

	Line No.	Line size (in.)	WP (bar)	LRP mode	Op. vol (liter)	TRT Mode	Op. vol. (liter)	TH Mode	Op. vol. (liter)	Hydr. Fluid (1)
XT/LRP Umbilical	1	1/4"	345	WCP Unlock	NA	XT lock	19.5	NA	NA	EE1
	2	1/4"	345	WCP Lock	NA	XT unlock	23	NA	NA	EE1
	3	1/4"	345	LAIV	1.6	XT Second. Unlock	26	NA	NA	EE1
	4	1/4"	345	LXOV	1.6	Grippers retract	57	NA	NA	EE1
	5	1/4"	345	MIV – LRP	2.4	Gripper Latch	5.1	NA	NA	EE1
	6	3/8"	1035	Meth. Injection/ EDP connecto r test	NA	NA	NA	Annulus Return	NA	Water/ MEG/ Meth.
	7	1/4"	345	UXOV	1.6	TRT Unlatch	16.2	NA	NA	EE1
	8	1/4"	345	UAIV	1.6	TRT Latch	12.9	NA	NA	EE1
	9	1/4"	345	PIV	See NOTE LRP Mode	Grippers Unlatch	2.8	NA	NA	EE1
	10	1/4"	345	Lock open	See NOTE LRP Mode	NA	NA	NA	NA	EE1
	11	1/4"	345	SSR Close	See NOTE LRP Mode	NA	NA	NA	NA	EE1
	12	3/8"	345	LP	NA	LP	NA	LP	NA	EE1
	13	1/4"	0-1035	SPARE	NA	VXT/ THR	NA	THR/ VXT	NA	EE1/ Water/ Brine
	14	1/4"	345	RV	See NOTE LRP Mode	NA	NA	NA	NA	EE1
	15	1/4"	345	EDP Connect or A	See NOTE LRP Mode	NA	NA	NA	NA	EE1
	16	1/4"	345	EDP Connect or B	See NOTE LRP Mode	NA	NA	NA	NA	EE1
	17	3/8"	1035	Gas Injection	NA	AVV	NA	AVV	NA	EE1/ Nitrogen
	18	1/4"	1138	SCSSV	NA	NA	NA	SCSSV	1@345bar 2@1138bar	EE1

XT/LRP Umbilical	19	1/4"	1138	SPARE/ TC open	NA	SPARE	NA	SPARE	NA	EE1/ Water/ Brine
	20	3/8"	1035	SPARE/ TC close	NA	SPARE	NA	SPARE/ DHHP	NA	MEG/ Meth./ Water
	21	1/4"	0-345	SSR open	See NOTE LRP Mode	Grippers Extend	63	NA	NA	EE1
	22	1/4"	690	2ND EDP CONN. UL	TBA	NA	NA	SCSSV Return	NA	EE1
	23	1/4"	345	MIV – XT	2.4	NA	NA	NA	NA	EE1
	24	1/4"	345	SSR wedge lock close	TBA	NA	NA	NA	NA	EE1

NOTE LRP Mode

Line 14 (RV):

Open		18liter	(line 14 + LP supply)
Close	*Return:*	0.9liter	(line 14)
		1.8liter	(line 14+10)
	LP:	14.6liter	

Line 9 (PIV):

Open		18liter	(line 14 + LP supply)
Close	*Return:*	0.9liter	(line 14)
		1.8liter	(line 14+10)
	LP:	14.6liter	

Line 15 + 16 (Connectors):

Lock	*Return:*	1.8liter	(line 15 + 16)
	LP:	20liter	
Unlock		22.5liter	

Line 11 (SSR):

Open		29liter	(line 21)
Close	*Return:*	0.9liter	(line 11)
		1.8liter	(line 10 + 11)
	LP:	17.5liter	

	Line no.	LRP Mode	TRT Mode	TH Mode	Type	Conductor cross-section [sqmm]
XT/ LRP Electrical lines	E1	LRP P & T	NA	NA	QUAD	4
	E2	XT PS/ A	XT PS/ A	XT PS/ A	QUAD	4
	E3	XT PS/ B	XT PS/ B	XT PS/ B	QUAD	4
	E4	RMS	NA	NA	QUAD	4
	E5	SPARE	SPARE	SPARE	QUAD	4

7.3 Shut down sequences

PSD Sequence

Time/ Function	LRP Line	SFT Line	Piston Volume	Pressure
Bleed SPWV Direct Line		2		345 bar venting
Fully close SPWV			0,6 litres	
Bleed SSPWV Direct Line		5		345 bar venting
Fully Close SSPWV			0,6 litres	

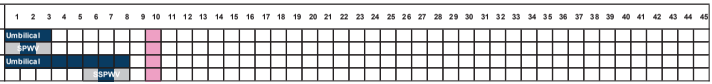

ESD Sequence (Normal Flowing Mode)

Time/ Function	LRP Line	SFT Line	Piston Volume	Pressure
Bleed SSR pilot line	10, 11		17,5 litres	345-120 bar falling
Starts closing SSR				
Fully close SSR				
Bleed SSR Wedge Lock Close pilot line	24		0,5 litres	345-120 bar falling
Starts closing SSR Wedge Lock				
Fully close SSR Wedge Lock				
Bleed PIV pilot line	9, 10		14,5 litres	345-120 bar falling
Starts closing PIV				
Fully close PIV				
Bleed LXOV Direct Line	4		0,6 litres	345 bar venting
Fully Close LXOV				
Bleed LAIV Direct Line	3		0,6 litres	345 bar venting
Fully Close LAIV				
Bleed UAIV Direct Line	8		0,6 litres	345 bar venting
Fully Close UAIV				
Bleed UXOV Direct Line	7		0,6 litres	345 bar venting
Fully Close UXOV				
Bleed MIV-LRP Direct Line	5		0,8 litres	345 bar venting
Fully Close MIV-LRP				
Bleed MIV-XT Direct Line	23		0,8 litres	345 bar venting
Fully Close MIV-XT				
Bleed SCSSV Direct Line	18			1034 bar venting
Fully Close SCSSV				
MCP Initiates SPCU ESD	Elec.			

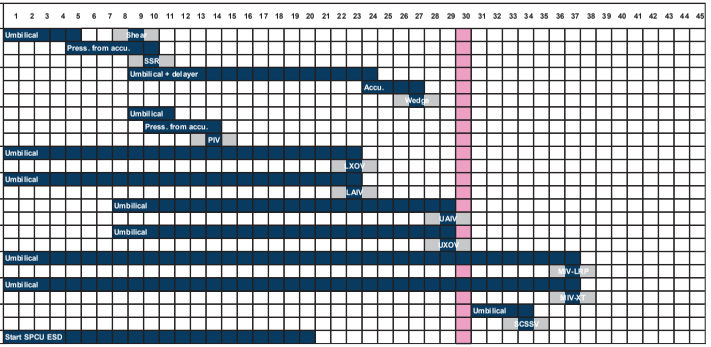

ESD Sequence (Wireline / Coiled Tubing Mode)

Time/ Function	LRP Line	SFT Line	Piston Volume	Pressure
Bleed SSR pilot line	10, 11		17,5 litres	34.5-120 bar failing
Starts closing SSR				
Fully close SSR				
Bleed SSR Wedge Lock Close pilot line	24		0,5 litres	34.5-120 bar failing
Starts closing SSR Wedge Lock				
Fully close SSR Wedge Lock				
Bleed PIV pilot line	9, 10		14,5 litres	34.5-120 bar failing
Starts closing PIV				
Fully close PIV				
Bleed LXOV Direct Line	4		0,6 litres	345 bar venting
Fully Close LXOV				
Bleed LAIV Direct Line	3		0,6 litres	345 bar venting
Fully Close LAIV				
Bleed UAIV Direct Line	8		0,6 litres	345 bar venting
Fully Close UAIV				
Bleed UXOV Direct Line	7		0,6 litres	345 bar venting
Fully Close UXOV				
Bleed MIV-LRP Direct Line	5		0,8 litres	345 bar venting
Fully Close MIV-LRP				
Bleed MIV-XT Direct Line	23		0,8 litres	345 bar venting
Fully Close MIV-XT				
MCP Initiates SPCU ESD	Elec.			

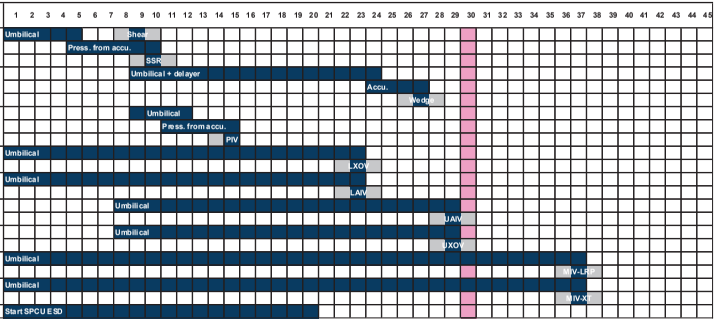

EQD Sequence

(5 Sec delay to allow CT to pull clear)

Time / Function	LRP Line	SFT Line	Volume	Pressure
Bleed SSR pilot line	10, 11		17,5 litres	345-120 bar falling
Starts closing SSR				
Fully close SSR				
Bleed SSR Wedge Lock Close pilot line	24		0,5 litres	345-120 bar falling
Starts closing SSR Wedge Lock				
Fully close SSR Wedge Lock				
Bleed PIV pilot line	9, 10		14,5 litres	345-120 bar falling
Starts closing PIV				
Fully close PIV				
Bleed RV pilot line	10, 14		14,5 litres	345-120 bar falling
Starts closing RV				
Fully close RV				
Pressurise EDP pilot line	15, 16			0-145 bar rising
Start opening vent valve			0,4 litres	
Start Venting				
Venting				
Stabplate starts			1,5 litres	
Stabplate unlatch				
EDP connector starts			19,7 litres	
EDP fully unlatch				
Bleed SPWV Direct Line		2	0,6 litres	345 bar venting
Fully Close SPWV				
Bleed SSPWV Direct Line		5	0,6 litres	345 bar venting
Fully Close SSPWV				
Bleed UXOV Direct Line	7		0,6 litres	345 bar venting
Fully Close UXOV				
Bleed LXOV Direct Line	4		0,6 litres	
Fully Close LXOV				
Bleed LAIV Direct Line	3		0,6 litres	345 bar venting
Fully Close LAIV				
Bleed UAIV Direct Line	8		0,6 litres	345 bar venting
Fully Close UAIV				
Bleed MIV-LRP Direct Line	5		0,8 litres	345 bar venting
Fully Close MIV-LRP				
Bleed MIV-XT Direct Line	23		0,8 litres	345 bar venting
Fully Close MIV-XT				
Bleed SCSSV direct line	17			1034 bar venting
Fully Close SCSSV				
Pressurise EDP 2nd Unlock	24		4 litres	0-690 bar rising
MCP Initiates SPCU EQD	Elec.			

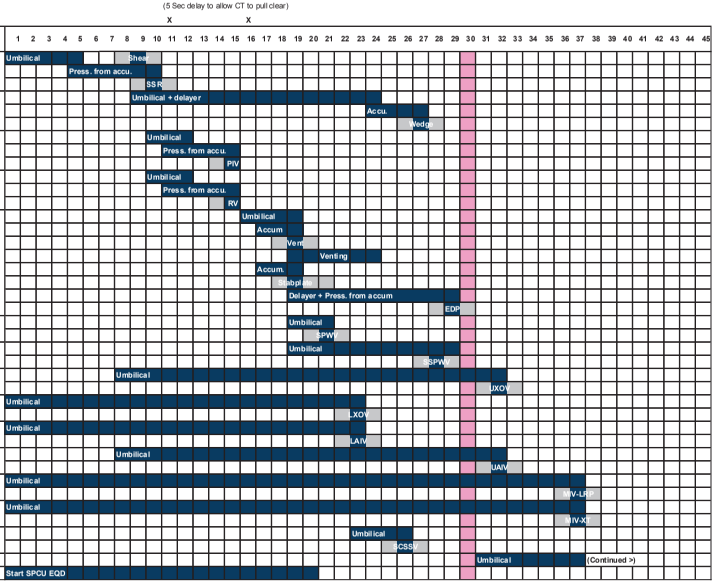

7.2 Kristin Workover Riser System (Dwg# 10-UW0009-00)

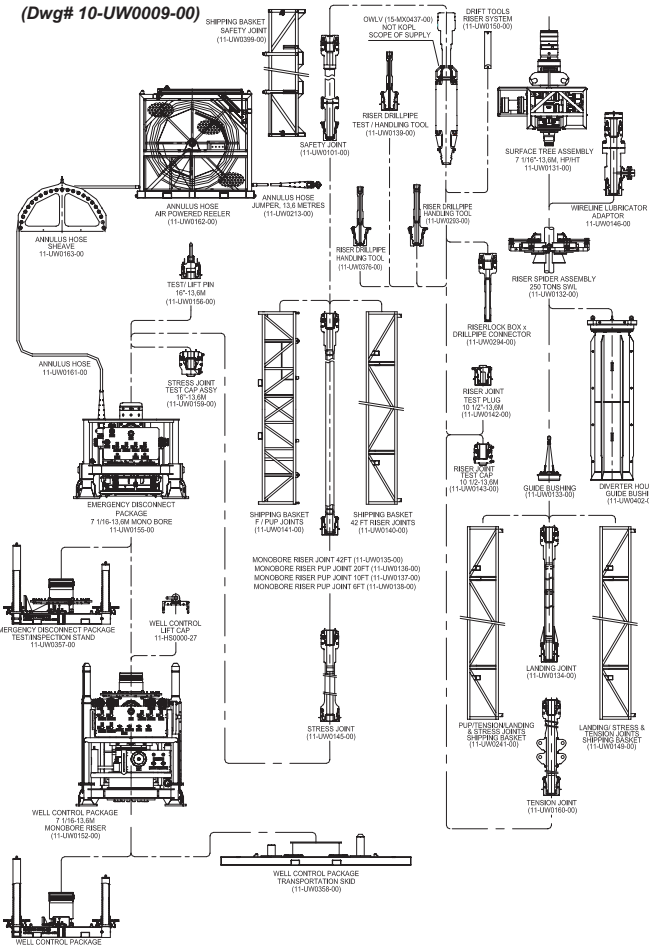

Surface Flow Tree

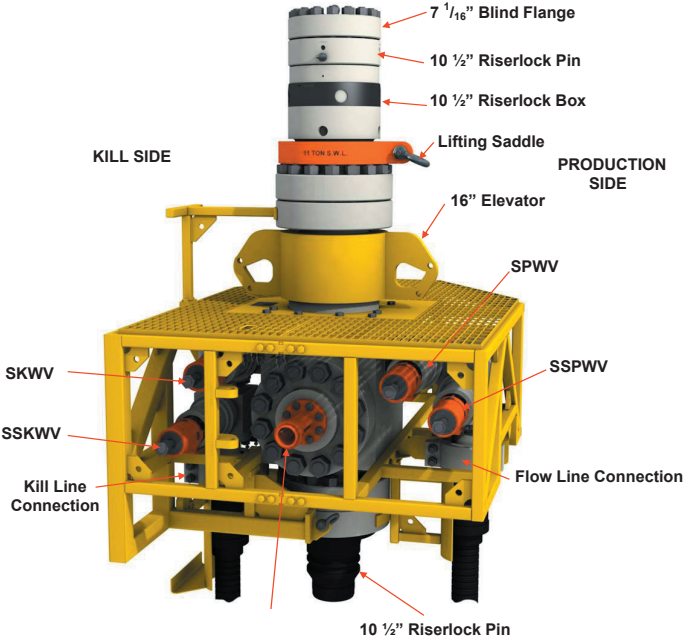

EDP w/ Detailed ROV Panel

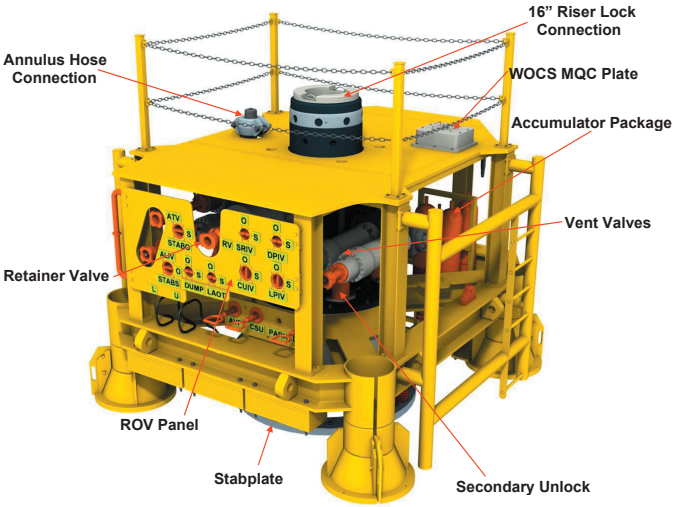

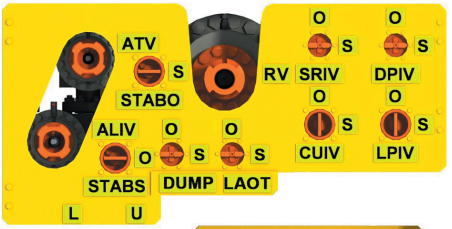

WCP w/ Detailed ROV Panel

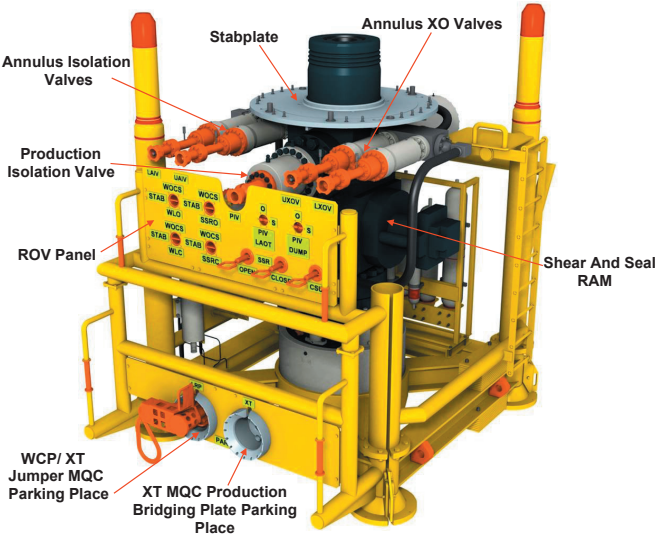

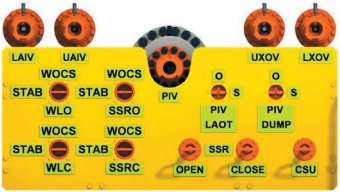

EDP/ WCP/ XMT

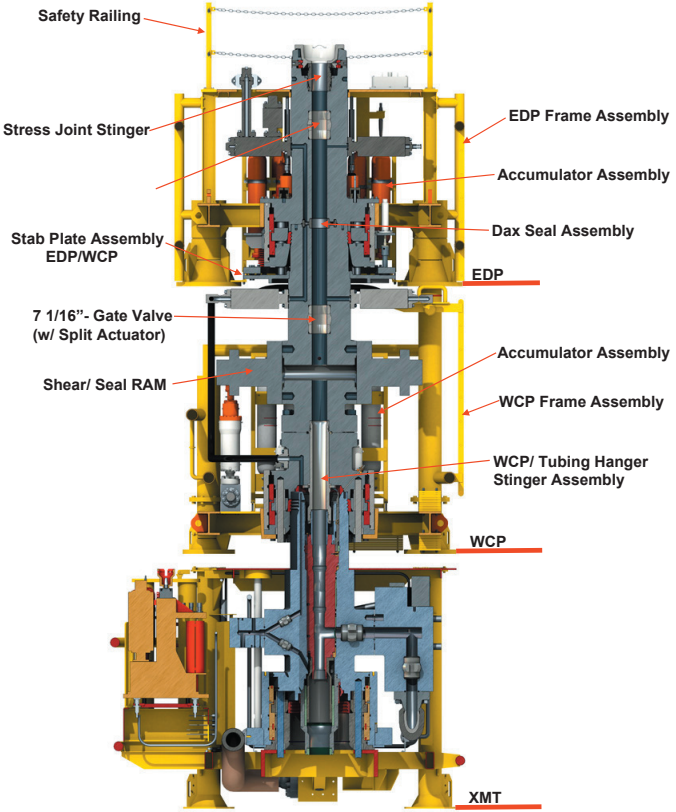
Safety Railing
Stress Joint Stinger
EDP Frame Assembly
Accumulator Assembly
Dax Seal Assembly
Stab Plate Assembly
EDP/WCP
EDP
7 1/16”- Gate Valve
(w/ Split Actuator)
Accumulator Assembly
Shear/ Seal RAM
WCP Frame Assembly
WCP/ Tubing Hanger
Stinger Assembly
WCP
XMT

Riser Lock Connectors

10 ½”

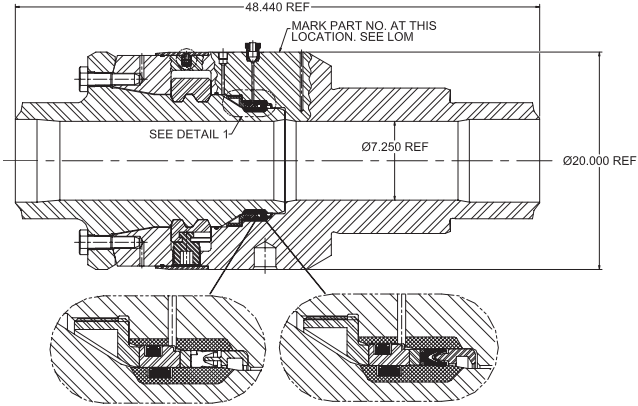

16”

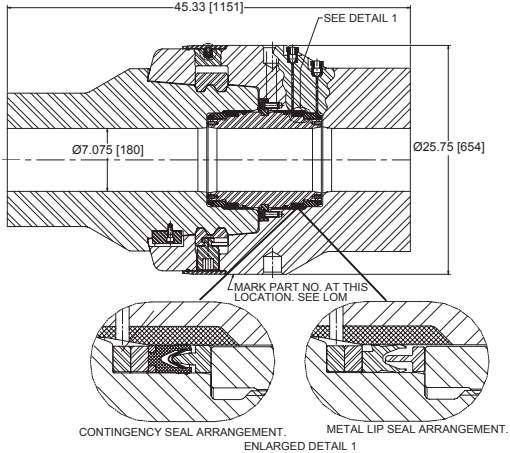

Work Over System Drift diameters

Equipment- Valves and flow loops	Nominal Bore Size [inch]	Drift Size [inch]
SFT Production Master Valve	7 $^{1}/_{16}$	7,030
SFT Production Wing Valve	2 $^{1}/_{16}$	NA
Secondary Wing Valves	2 $^{1}/_{16}$	NA
Lubricator Valve	6 $^{1}/_{8}$ (6.115" min. Diameter)	6,00
LRP (EDP & WCP) above WCP Stinger	7 $^{1}/_{16}$ (7.060" min. Diameter)	7,030
WCP Stinger	6 $^{3}/_{8}$ (6.365" min. Diameter)	6,340
Annulus Hose	1.496	NA
Annulus Valves on LRP	2 $^{1}/_{16}$	NA
EDP connector bleed off valve	2 $^{1}/_{16}$	NA
WCP Methanol Injection Valves	2 $^{1}/_{16}$	NA

Riser Joints Table

Riser Joint	Part No.	Serial No.	Tag No.	Length [feet(mm)]	Tolerance [inch(mm)]	Drift Diameters [inch(mm)]*
42ft Riser Joint	11-UW0135-00	001 to 035	19UP7101 to 19UP7135	42' (1280,16)	+0,11"(+0,2794) -5,62"(-14,2748)	6,030" (15,3162)
40ft Riser Joint	11-UW0135-00	036 to 039	19UP7136 to 9UP7139	40' (1219,2)	+0,35"(+0,889) -0,83"(-2,1082)	6,030" (15,3162)
20ft Riser Joint	11-UW0136-00	30037-001 to 30037-004	19UP7151 to 19UP7154	20' (609,6)	+0,01"(+0,0254) -0,02"(-0,0508)	7,030" (17,8562)
10ft Riser Joint	11-UW0137-00	30065-001 to 30065-003	19UP7161 to 19UP7163	10' (304,8)	+0,00"(+0,00) -0,04"(-0,1016)	7,030" (17,8562)
6ft Riser Joint	11-UW0138-00	30070-001, 30070-002, 32709-001 and 32709-002	19UP7171 to 19UP7174	6' (182,88)	+0,02"(+0,0508) -0,10"(-0,254)	7,030" (17,8562)
Riser Safety Joint/ Weak Link	11-UW0101-00	32926-001	19UP7140	10' (304,8)	+0,07"(+0,1778) -0,00"(-0,00)	6,030" (15,3162)
Riser Landing Joint	11-UW0134-00	30084-001 and 30084-002	19UP7501A and 19UP7501B	46' (1402,08)	+0,00"(+0,00) -0,12"(-0,3048)	7,030" (17,8562)
Riser Stress Joint	11-UW0145-00	29443-001 and 29443-002	19UP7503A and 19UP7503B	37,5' (1143)	+0,25"(+0,635) -0,00"(-0,00)	7,030" (17,8562)
Tension Joint	11-UW0160-00	29943-001 and 29943-002	19UP7502A and 19UP7502B	20' (609,6)	+0,35"(+0,889) -0,00"(-0,00)	7,030" (17,8562)

*Tolerance for drift diameters [inch (mm)] = +0,020"/ -0,00" (+0,0508/ -0,00)

Table of Contents

8 Intervention System 112
8.1 HCM Pressure Cap Running Tool 112
8.2 HCM Stroke Tool 114
8.3 2.7 kNm Torque Tool 115
8.4 17 kNm Torque Tool 116
8.5 Shipping and Deployment Basket for HCM 117
8.6 Choke Module Running Tool w/ Detailed ROV Panel 118
8.7 CMRT Shipping Skid 119
8.8 SCM Running Tool w/ Detailed ROV Panel 120
8.9 SCM RT Shipping Skid 121
8.10 Linear Actuator Override Tool (LAOT) 30ton 122
8.11 Linear Actuator Override Tool (LAOT) 120ton 123

8 Intervention System

8.1 HCM Pressure Cap Running Tool

(Part Number 14-NE0047-00)

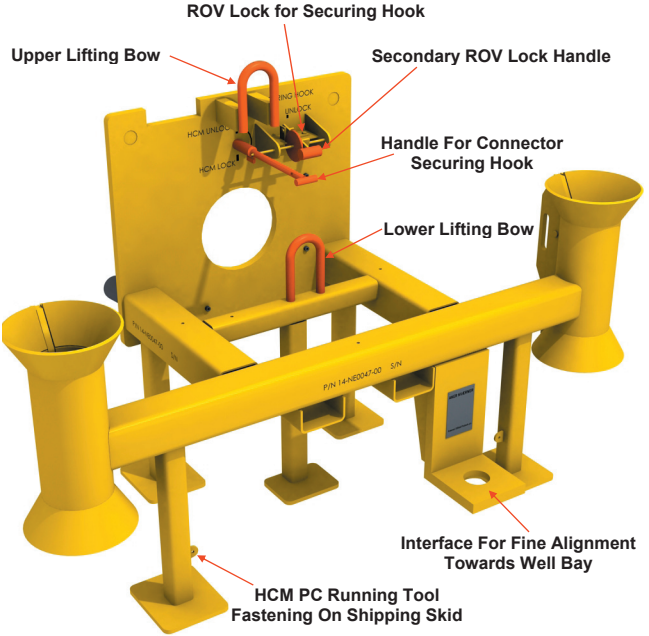

REAR VIEW

HCM Pressure Cap Running Tool
(Part Number 14-NE0047-00)

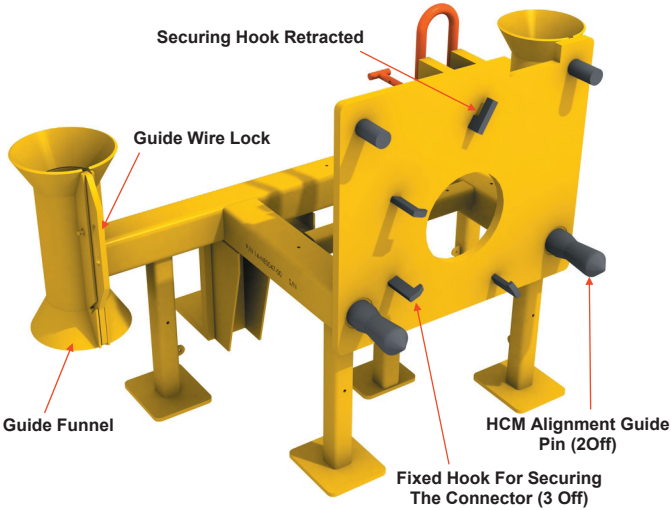

FRONT VIEW

8.2 HCM Stroke Tool
(Part Number 11-NT3305-00)

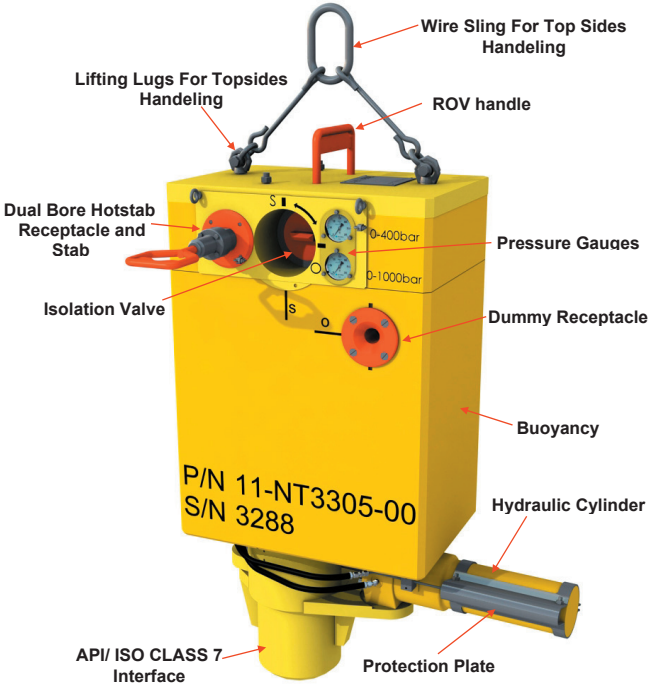

8.3 2.7 kNm Torque Tool
(Part Number 94-MX0064-00)

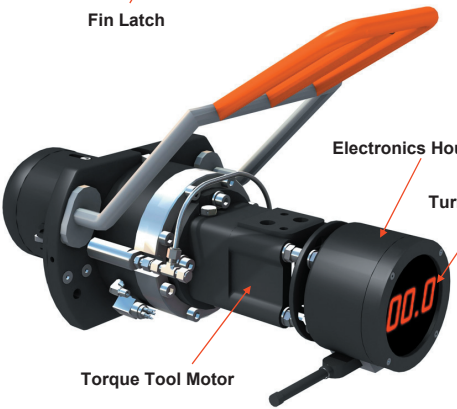

8.4 17 kNm Torque Tool
(Part Number 94-MX0063-00)

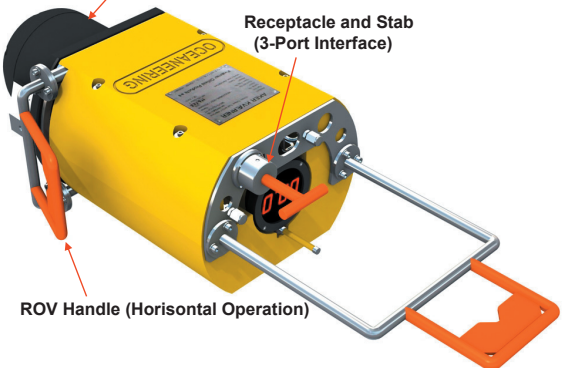

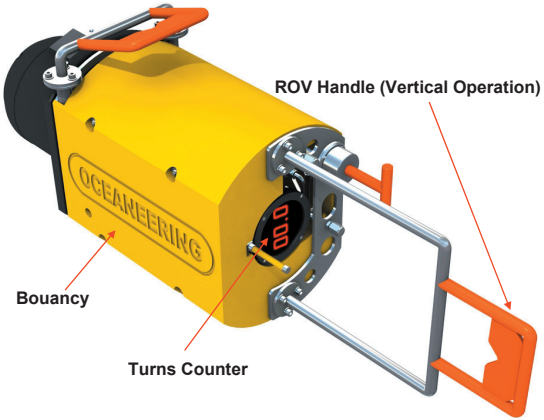

8.5 Shipping and Deployment Basket for HCM
(Part Number 11-NE0223-00)

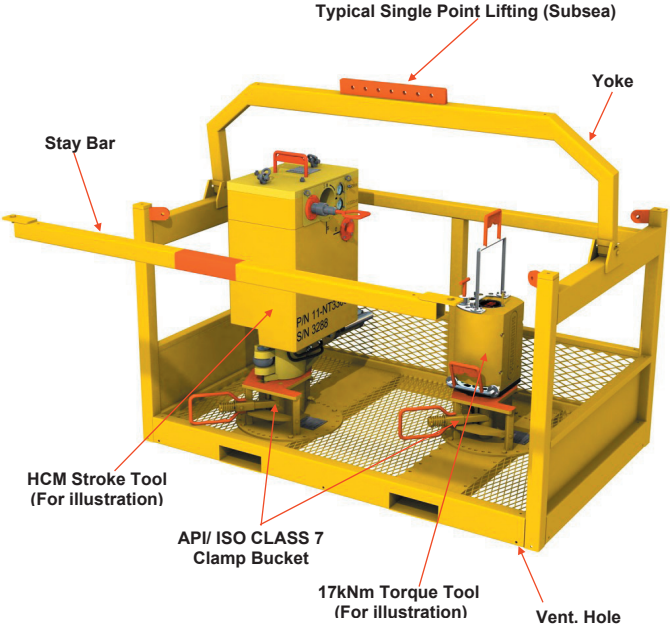

8.6 Choke Module Running Tool w/ Detailed ROV Panel
(Part Number 11-NT3300-01)

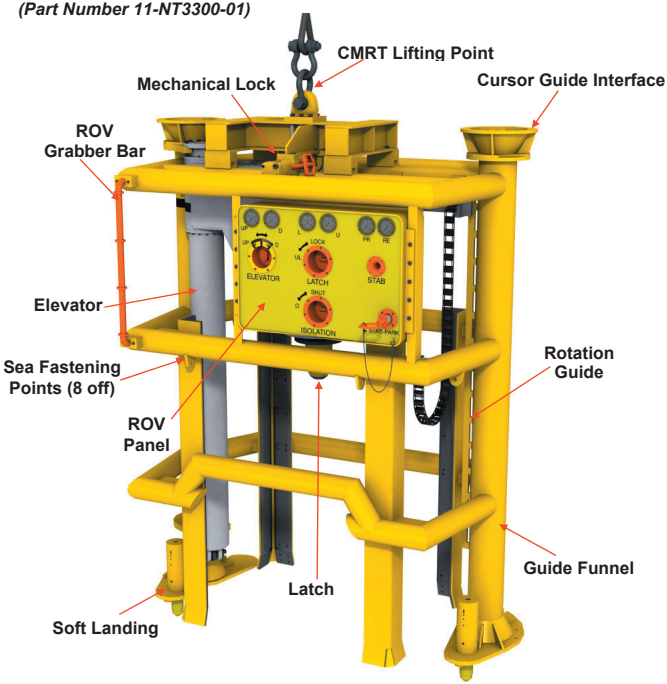

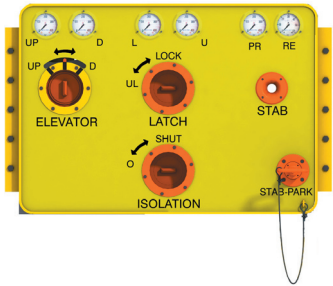

8.7 CMRT Shipping Skid
(Part Number 31-NT3300-03)

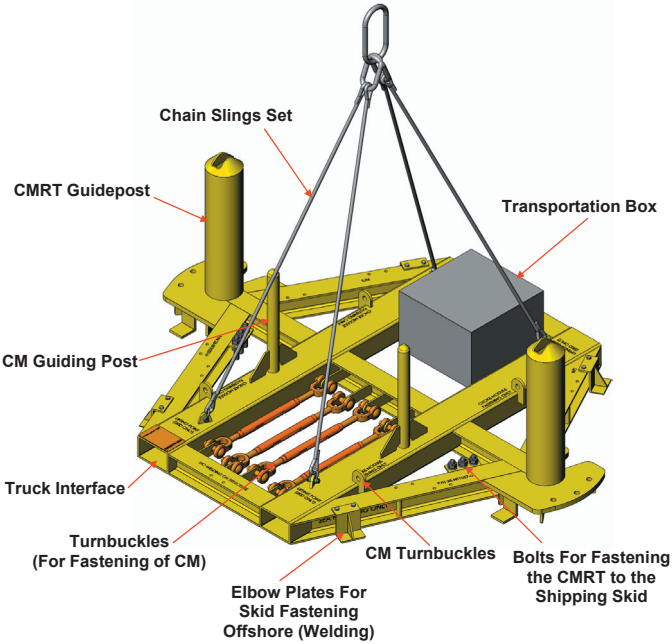

8.8 SCM Running Tool w/ Detailed ROV Panel
(Part Number 11-KI0003-01)

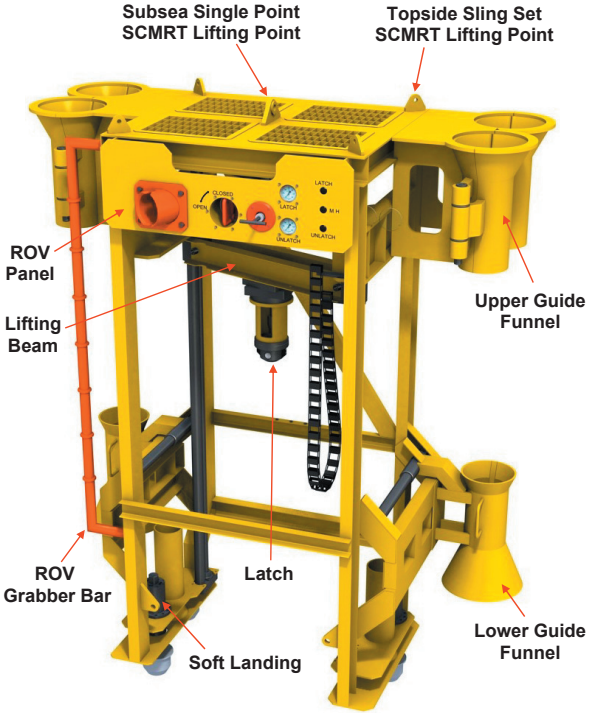

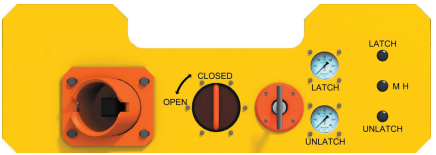

8.9 SCM RT Shipping Skid
(Part Number 11-KI0003-02)

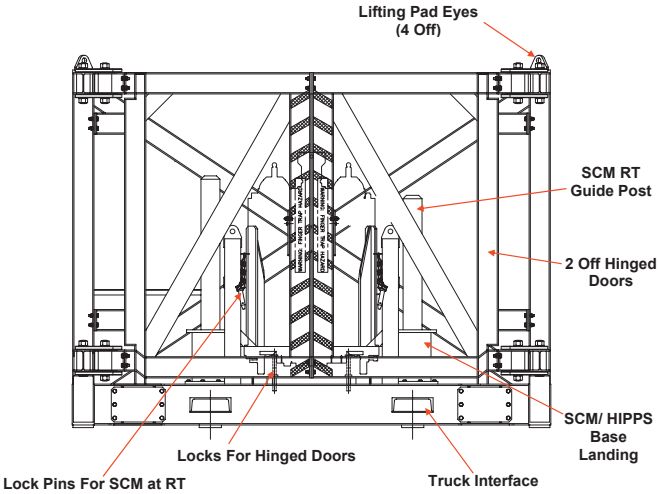

8.10 Linear Actuator Override Tool (LAOT) 30ton
(Part Number 90-MX0059-00)

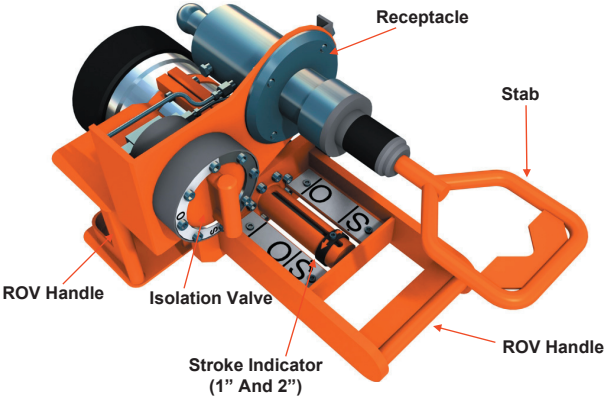

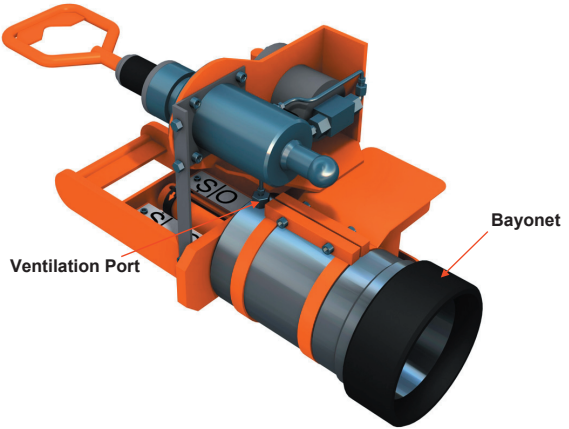
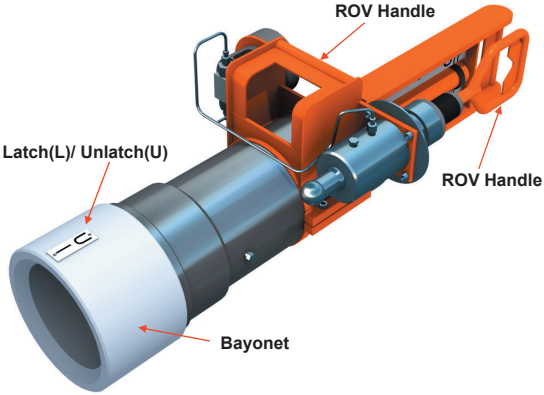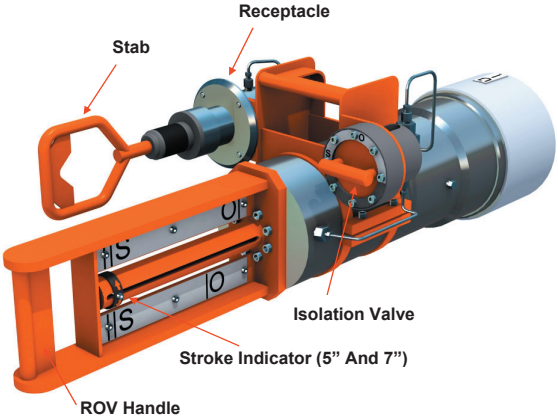
8.11 Linear Actuator Override Tool (LAOT) 120ton
(Part Number 90-MX0062-00)