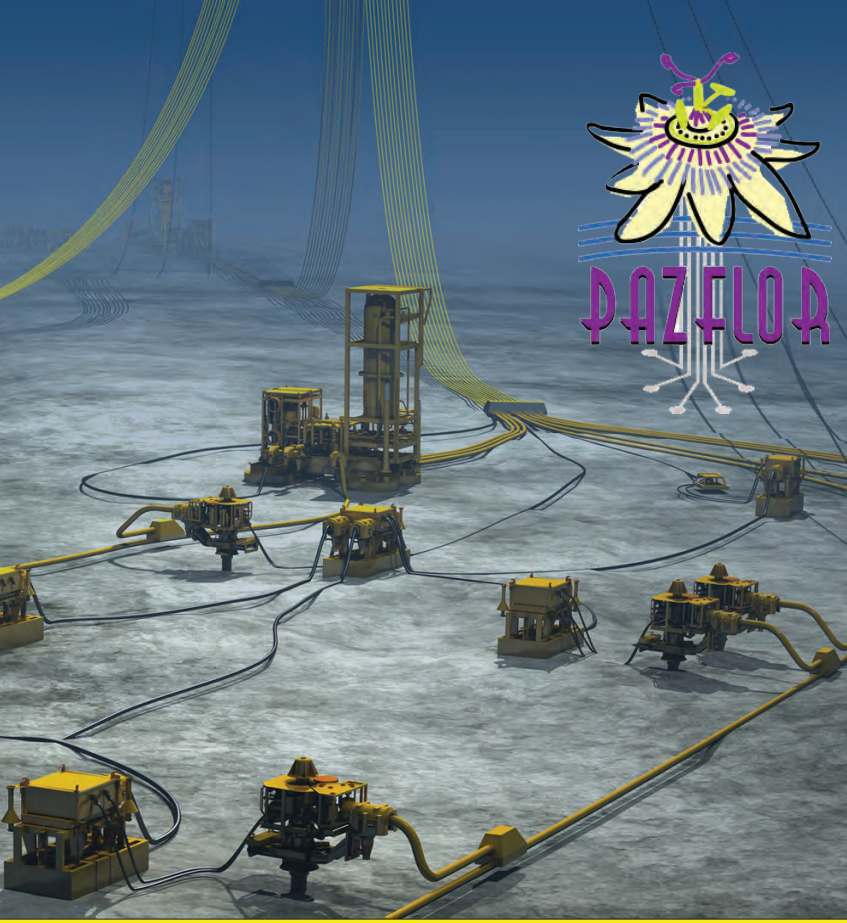

PAZFLOR

PERSONAL HANDBOOK SUBSEA PRODUCTION SYSTEM EQUIPMENT

TOTAL

SONANGOL

FMC Technologies

This edition of Personal Handbook Subsea Equipment for Pazflor was completed from the publisher May 2011.

A publication from Industriell Dokumentasjon as, Kongsberg, Norway.

Table of Contents page

The purpose of this book is to provide general information on the equipment for the Pazflor project.

The handbook must not replace the official user documentation as any information may be changed without further notice.

1.1 Introduction

List of Abbreviations:

AAV	Annulus Acces Valve
ACC	Accumulator
AMV	Annulus Master Valve
AWV	Annulus Wing Valve
BOP	Blow Out Preventer
BV	Ball Valve
CAT	Connector Actuation Tool
CCF	Closed Caisson Foundation
CCW	Counter Clockwise
CIDV	Chemical Injection Dosing Valve
CIV	Chemical Injection Valve
CST	Choke Seal Test
CUL	Connector Unlock
CW	Clockwise
DHG	Downhole Gauge
EHU	Electric Hydraulic Umbilical
ESD	Emergency Shut Down
ETU	Electronic Test Unit
EQD	Emergency Quick Disconnect
FAI	Fail As Is
FLOT	Flying Lead Orientation Tool
FSC	Fail Safe Close
FSO	Fail Safe Open
GV	Gate Valve
HCAT	Horizontal Connector Actuation Tool
HP	High Pressure
HPU	Hydraulic Power Unit
ICV	Injection Choke Valve
IMV	Injection Master Valve
IWC	Intelligent Well Completion
IWV	Injection Wing Valve
LAOT	Linear Actuator Override Tool
LP	Low Pressure
MIV	Methanol Injection Valve
MM	Manifold Module
MPFM	Multi Phase Flow Meter
MPV	Manifold Production Valve
MRT	Module Running Tool
MSS	Manifold Support Structure
MQC	Multi Quick Connector
PCV	Production Choke Valve
PGB	Permanent Guide Base
PLC	Programmable Logic Controller
PLM	Pig Loop Module
PMV	Production Master Valve
PWV	Production Wing Valve
PSD	Production Shut Down
PT	Pressure Transmitter
RHS	Rectangular Hollow Section
ROV	Remote Operated Vehicle
ROT	Rotation and Orientation Tool
RT	Running Tool
SCM	Subsea Control Module
SCMTS	Subsea Control Module Test Stand
SCSSV	Surface Control Subsurface Safety Valve
SCU	Subsea Control Unit
SDPU	Subsea Data Processing Unit
SLV	Service Line Valve
SPCU	Subsea Power and Communication Unit
SPCTU	Subsea Power and Communication Test Unit
SVN	Safety Valve Needle Valve
SWL	Safe Weight Load
TFHPU	Test & Flushing Hydraulic Power Unit
THISL	TH independent secondary lock
THMRT	Tubing Hanger Module Running Tool
THOJ	Tubing Hanger Orientation Joint
TH	Tubing Hanger
THRT	Tubing Hanger Running Tool
TPU	Topside Processor Unit
TRT	Tree Running Tool
TT	Temperature Transmitter
UCM	Umbilical Control Module
UDM	Umbilical Distribution Module
UTH	Umbilical Termination Head
UTI	Umbilical Termination for Injection
UTP	Umbilical Termination Production
VCAT	Vertical Connector Actuation Tool
WH	Well Head
WI	Water Injection
WJ	Well Jumper
WO	Workover
WOCS	Workover Control System
WST	Wellhead Seal Test
XOV	Crossover Valve
XT	X-mas Tree

1.2 Abbreviations

Scope of Supply:
3 Subsea Separator Systems (Miocene)
3 Manifold Systems (Oligocene)
25 Production XT Systems
22 Water Injection XT Systems (incl. 2 w/IWC)
2 Gas Injection XT Systems
49 WH Systems
2 Workover Control System (WOCS, UDF, WO umbilical, Clamps and Gooseneck)
Subsea Distribution Units (UDM, UCM, UTP, UTI)
Topside Control facilitated for 78 wells + 20% (SCU, SPCU, smart tool, HPU)
Subsea Controls distribution equipment (SCM's, Sensors and hardness, electrical, hydraulic and optical jumpers, Cobra Heads, MPFM, Single Phase Flow meter, SWIMS)
Subsea Isolation Valve
Tie In System
ROV Tools

Key Data:
"The Pazflor field is located in Block 17, offshore Angola, approximately 40 km to the east of the Dalia FPSO and 150 km offshore. The Pazflor Subsea Production System is connected to a spread-moored FPSO via a series of subsea production and injection lines, umbilicals and associated risers.

The Pazflor project will develop the resources of two independent groups of reservoirs:

- Miocene reservoirs (Hortensia, Perpetua, Zinia), in 600 to 900 m water depth, containing heavy, acid and viscous oil, developed with subsea gas/liquid separation and liquid boosting.
- Oligocene reservoirs (Acacia), in 1000 to 1200 m water depth, containing light and Paraffinic oil, developed with a production loop including riser bottom gas lift.

Field Key Parameters Miocene	
Water Depth	600-900 meter
Production Fluid Types	Heavy, acid and viscous Oil
Tie back to	FPSO via subsea separation system
Sand	Yes
Max Shut in pressure at WH	200 bar
Max Temperature at WH	69.7C

Field Key Parameters Oligocene	
Water Depth	1000-1200 meter
Production Fluid Types	Light and Paraffinic Oil
Tie back to	FPSO via subsea manifold system
Sand	Yes
Max Shut in pressure at WH	350 bar
Max Temperature at WH	111.5C

1.3 Field Key Parameters

2 Field Layout

2.1 Field Layout

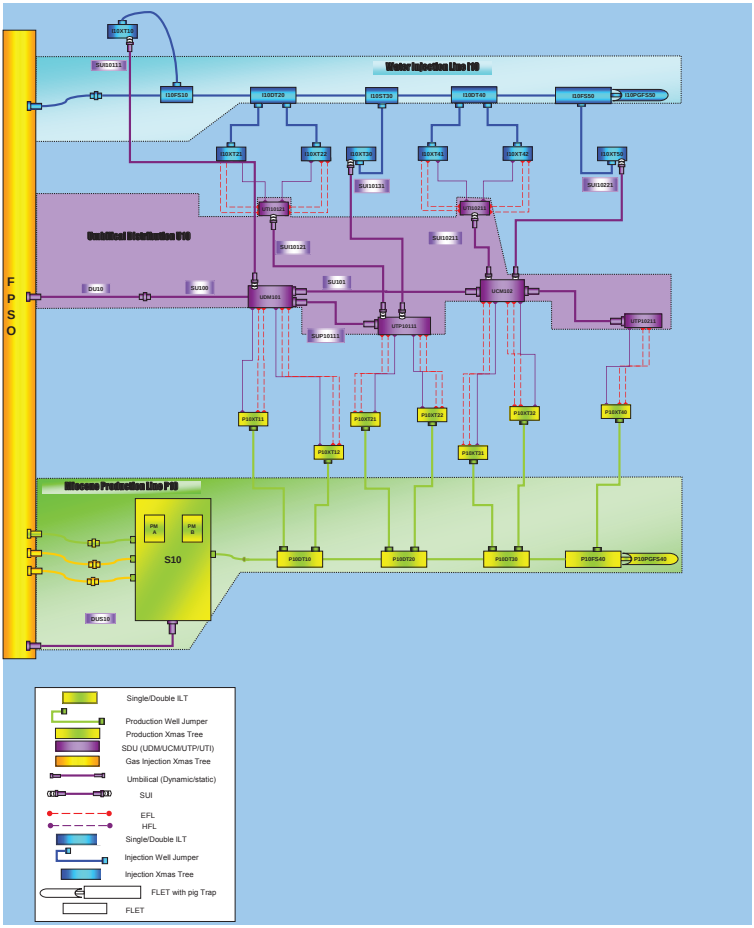

2.1.1 Field Layout P10

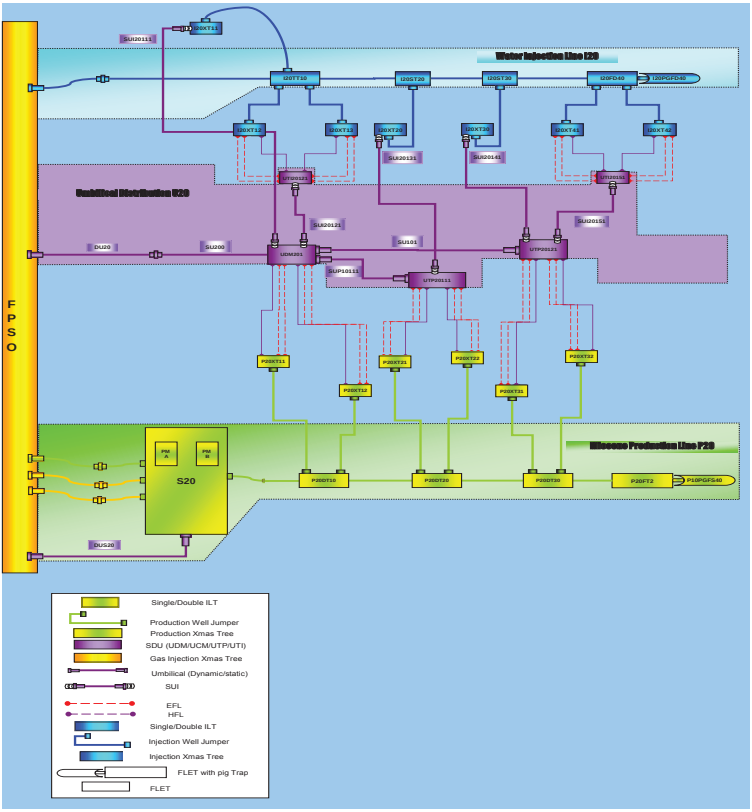

2.1.2 Field Layout P20

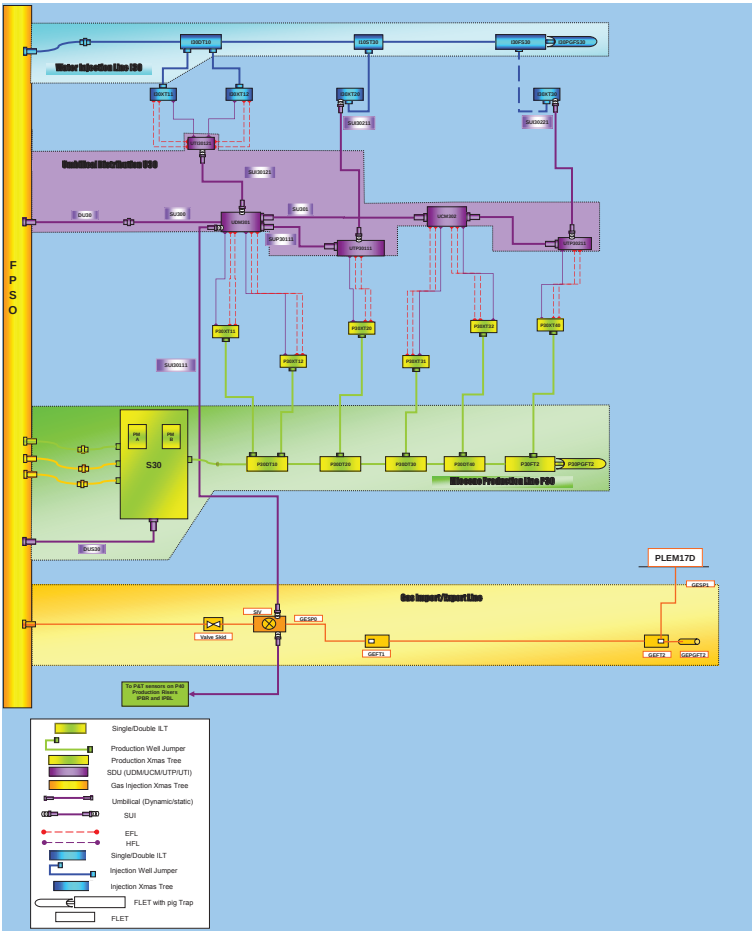

2.1.3 Field Layout P30

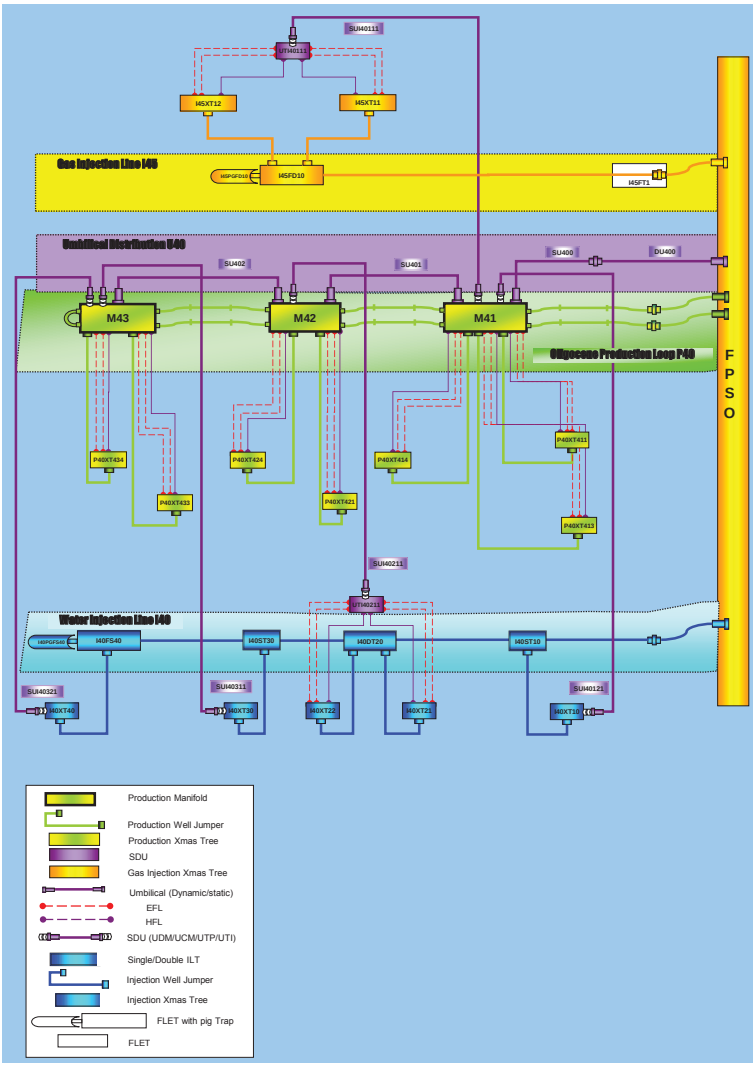

2.1.4 Field Layout P40

3 Topside Installation

An electro-hydraulic Subsea Production Control System is used for the Pazflor Field. On SPS part, the system utilises “Signal-on-Power electrical distribution technology with high bandwidth “LongSpeed” full duplex modems. This system results in a reduced number of electrical cores in the umbilical system when compared with separate power and signal systems. On SSS side, the system utilises Electical lines for power and Optical fibres for signal. [...] This system avoids degradation of signal by the interferences caused by the pumps’ HV cables.

The Topsides equipment for the Subsea Production Control System includes the Hydraulic Power Unit (HPU), the Subsea Power and Communications Unit (SPCU), and the Subsea Control Unit (SCU).

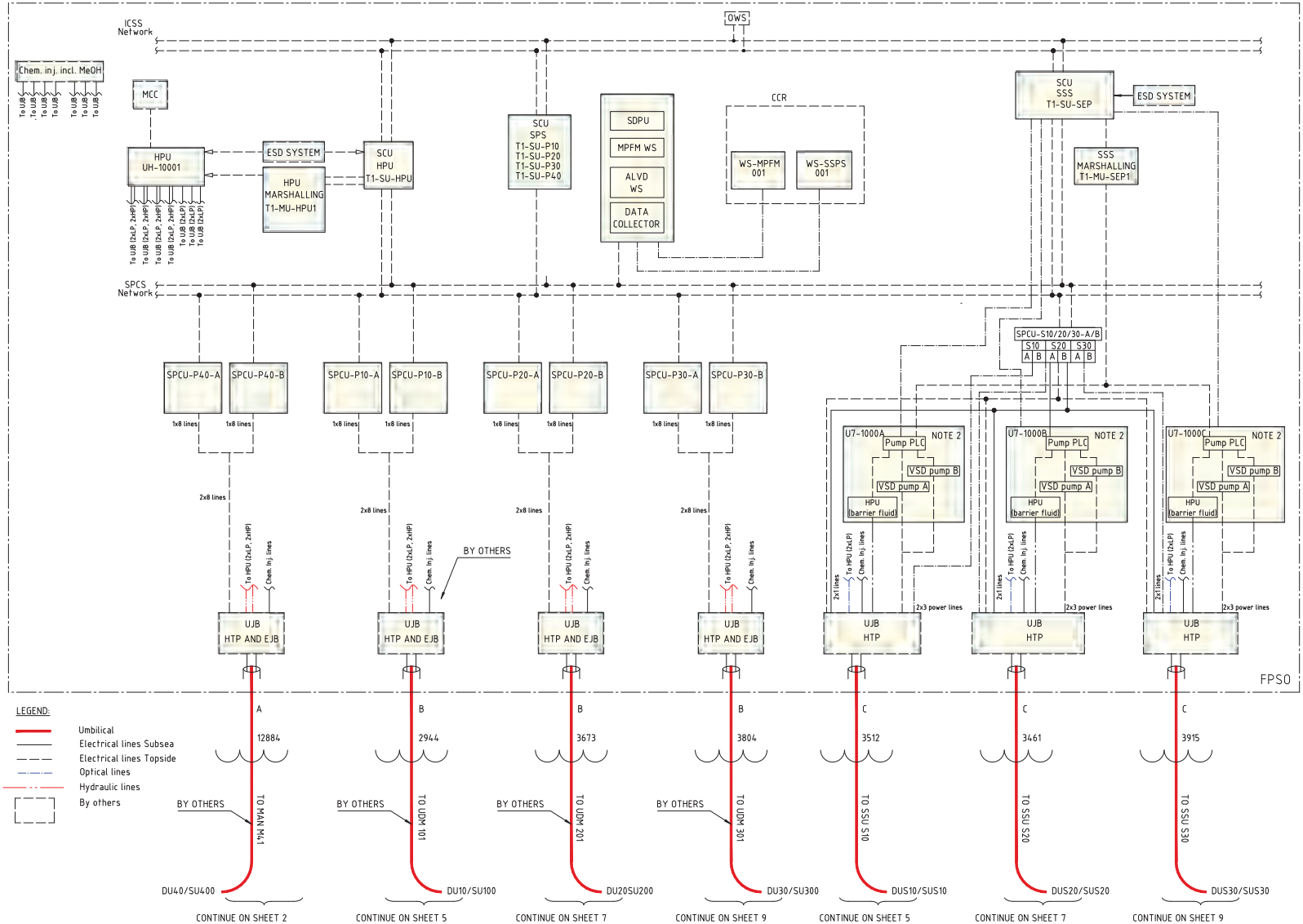

3.1 Scope of Supply

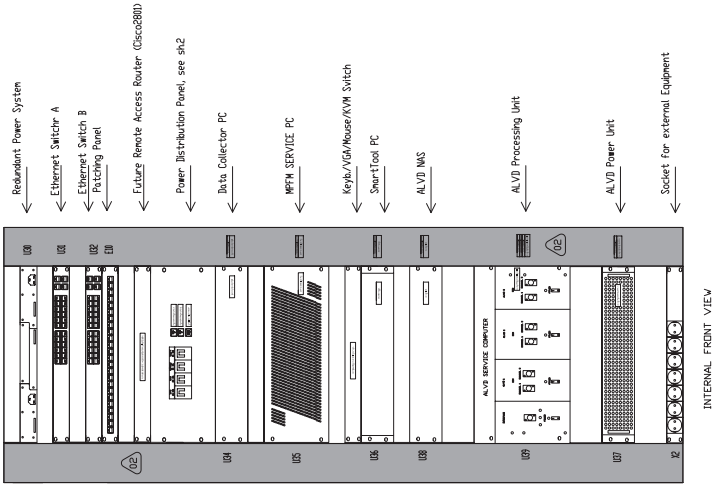

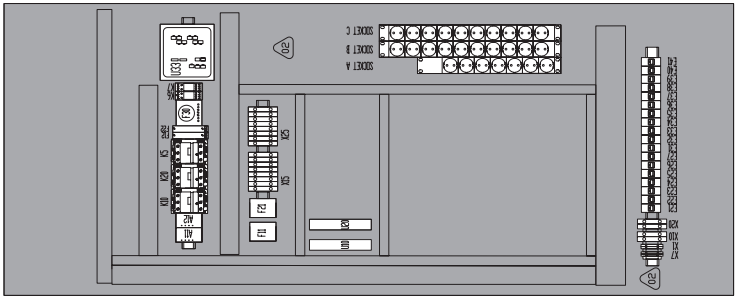

3.2 Topside Cabinets, Typical, SCU, SPCU

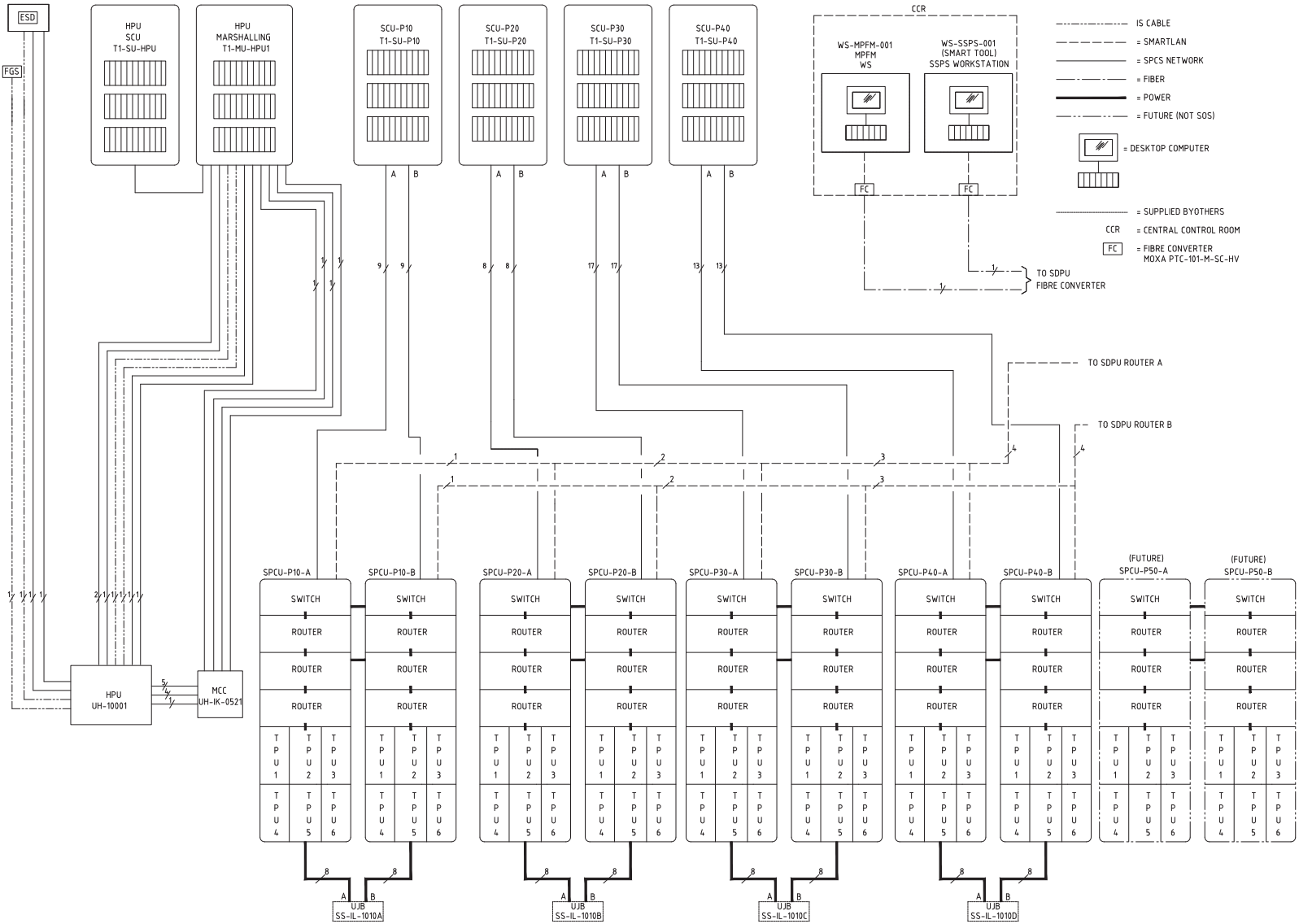

REFERENCE IS MADE TO
DA600043815/AO-040-SG-400-150102

3.3 Topside Control System Network Topology

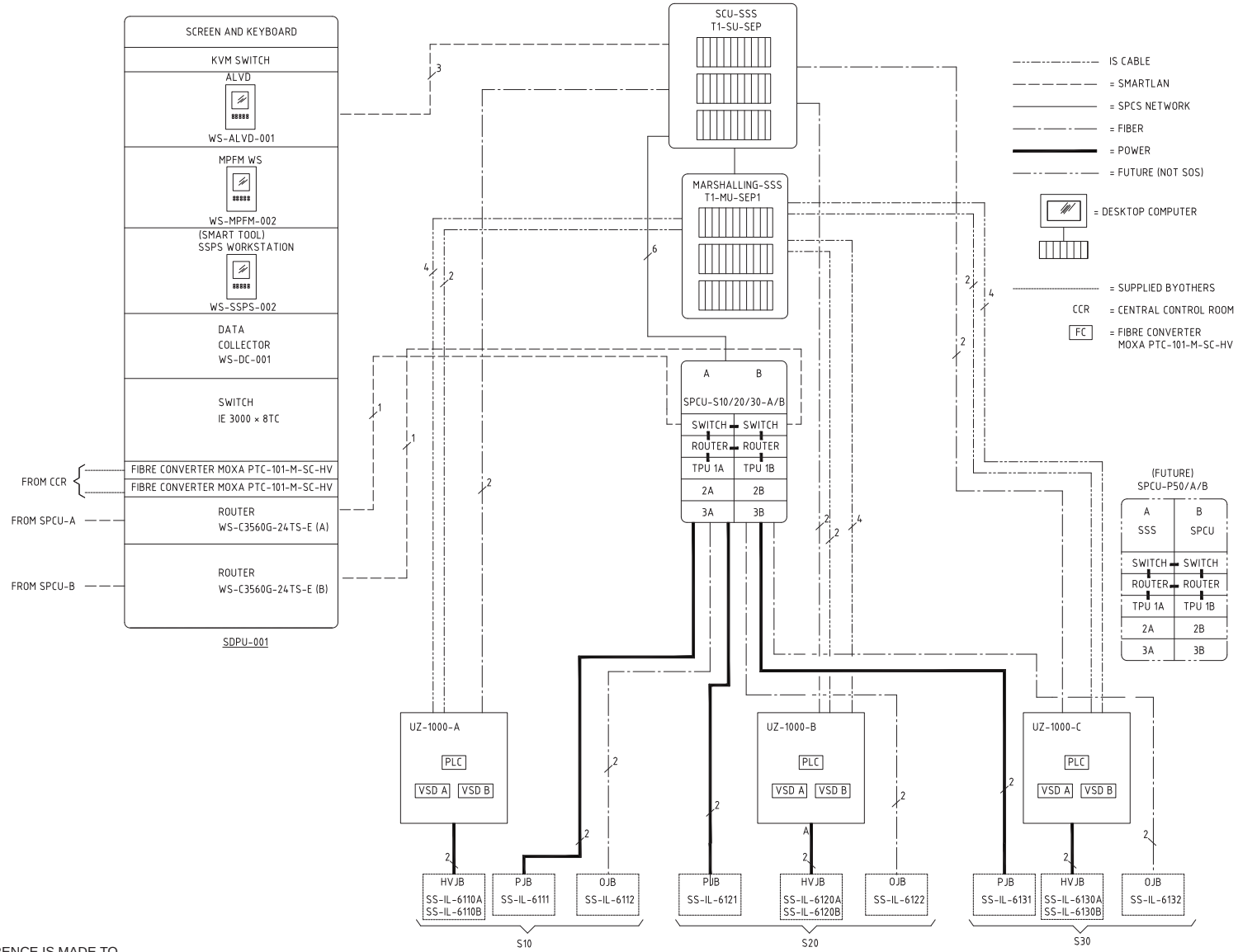

REFERENCE IS MADE TO
DA600043815/AO-040-SG-400-150102

Topside Control System Network Topology

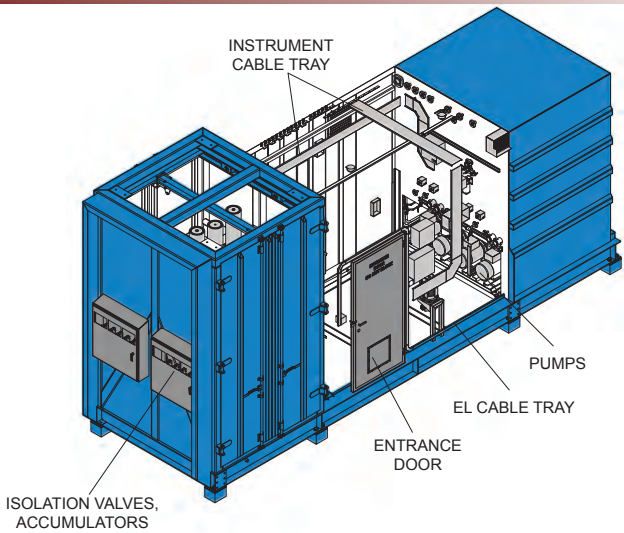

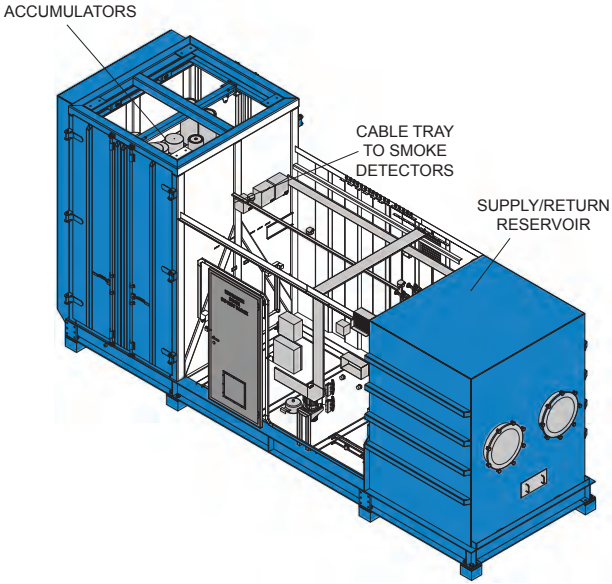

3.4 Topside Hydraulic Power Unit

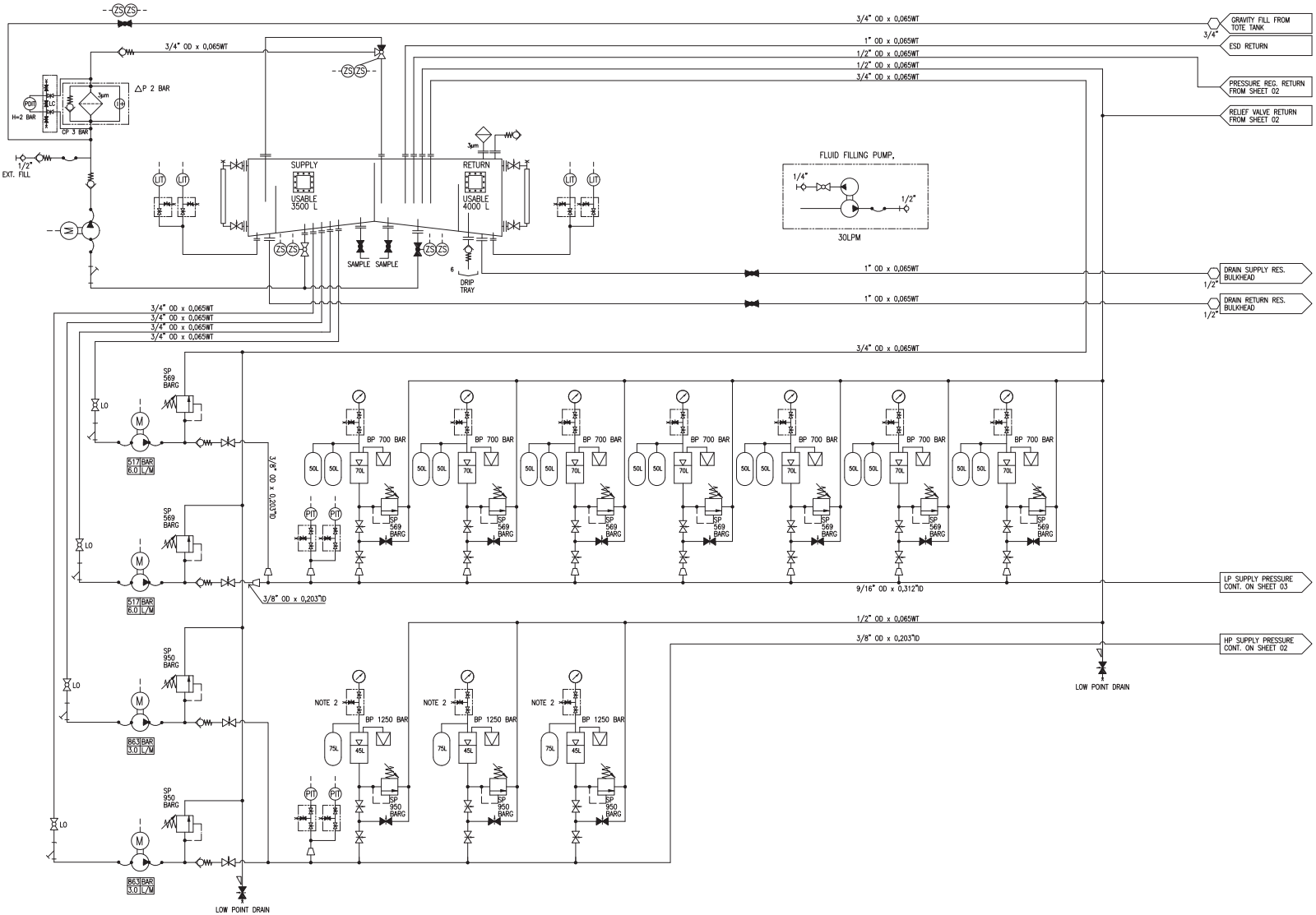

3.4.1 Topside HPU Schematic

REFERENCE IS MADE TO
11238-D02-001/AO-040-SG-416-150008

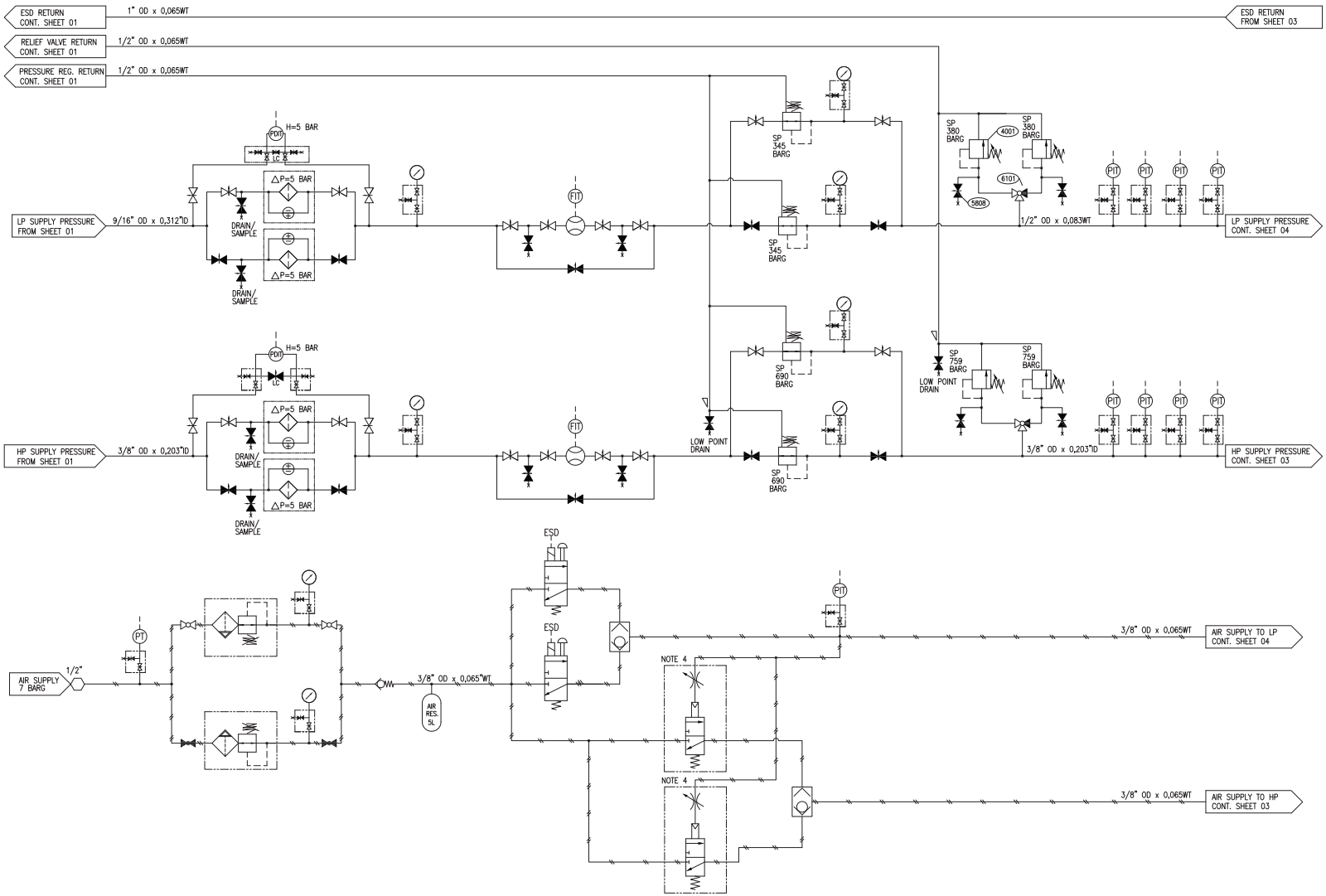

REFERENCE IS MADE TO
11238-D02-001/AO-040-SG-416-150008

Topside HPU Schematic

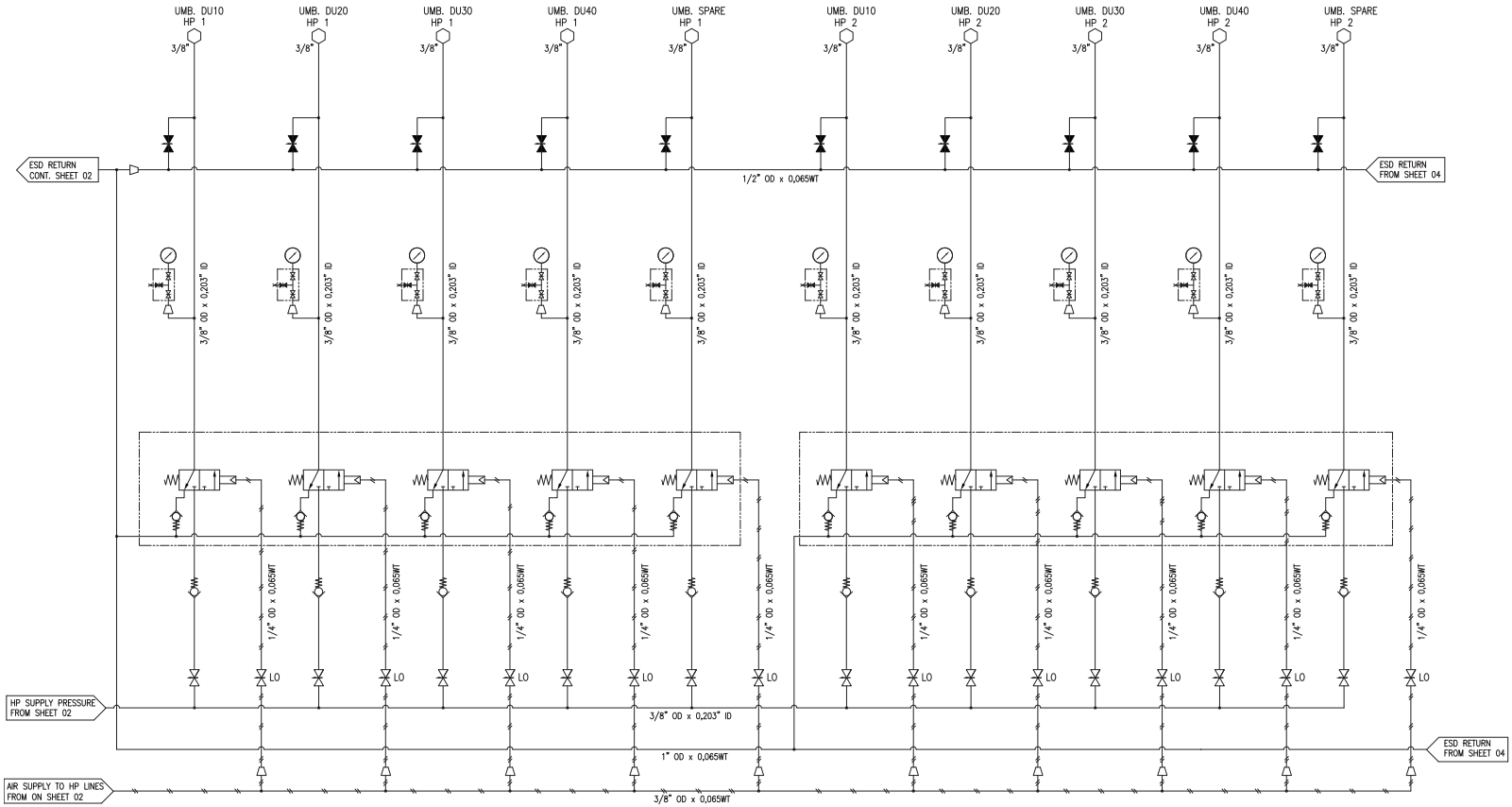

Topside HPU Schematic

REFERENCE IS MADE TO
11238-D02-001/AO-040-SG-416-150008

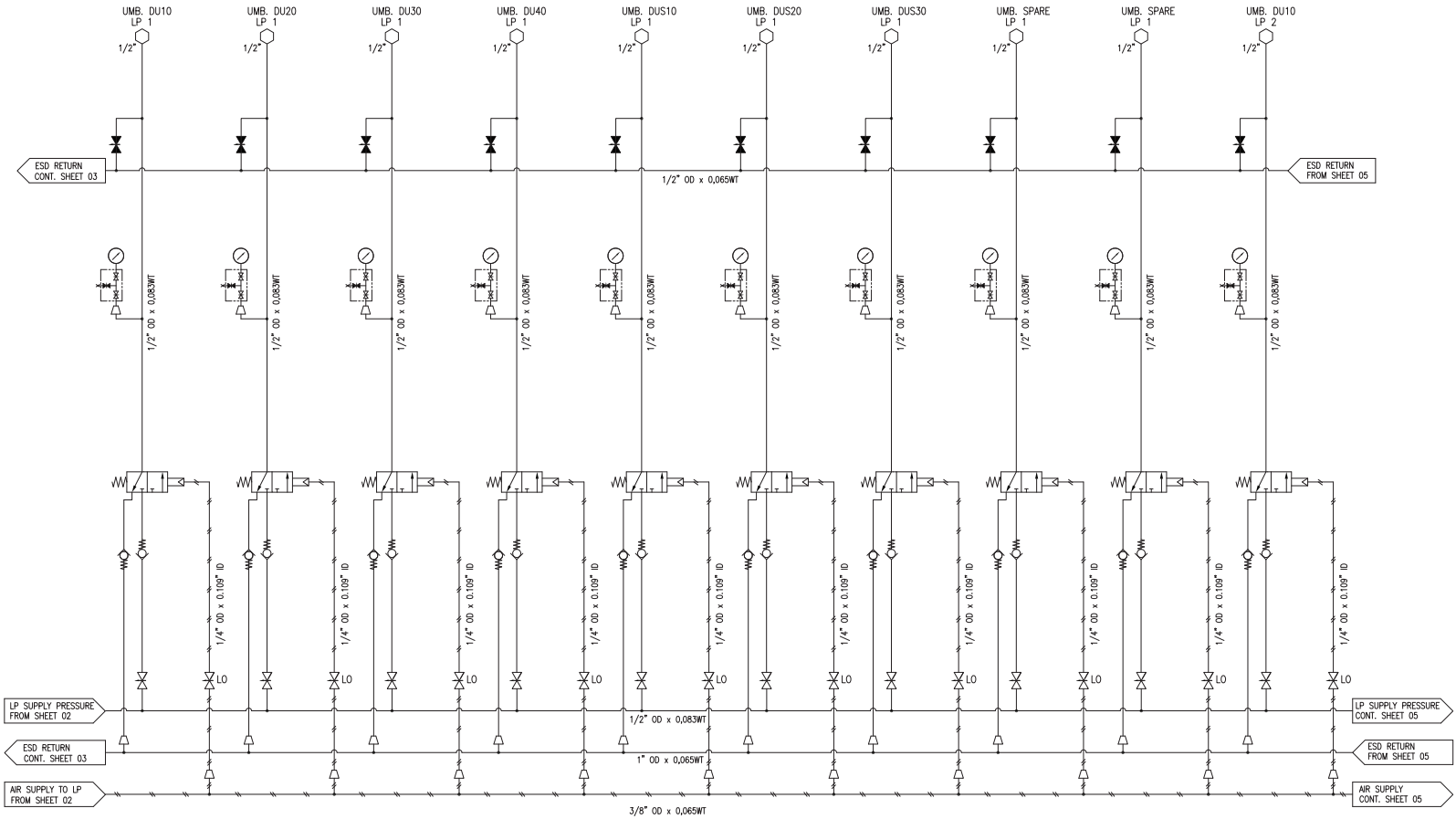

REFERENCE IS MADE TO
11238-D02-001/AO-040-SG-416-150008

Topside HPU Schematic

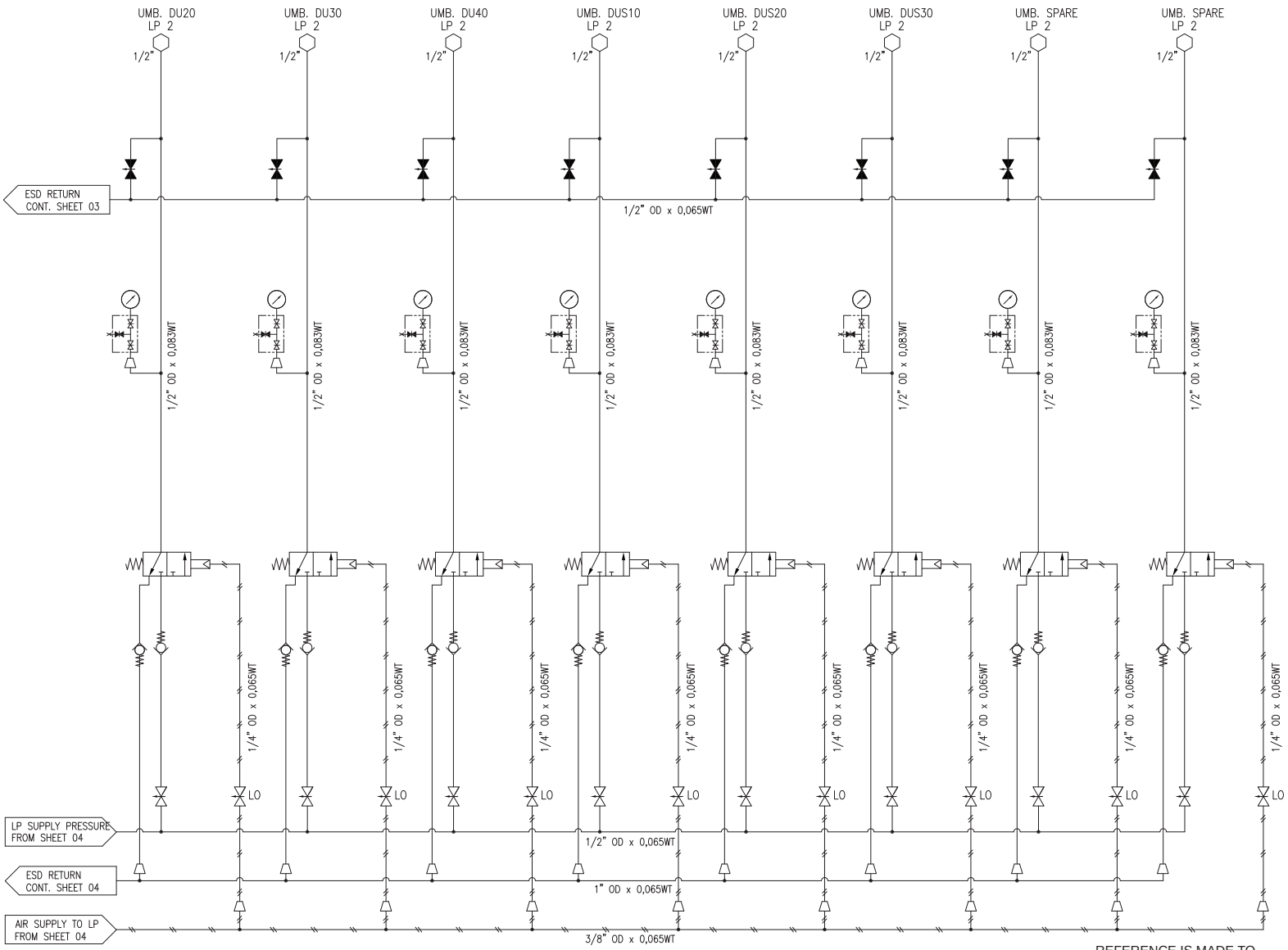

REFERENCE IS MADE TO
11238-D02-001/AO-040-SG-416-150008

Topside HPU Schematic

4 Subsea Installation

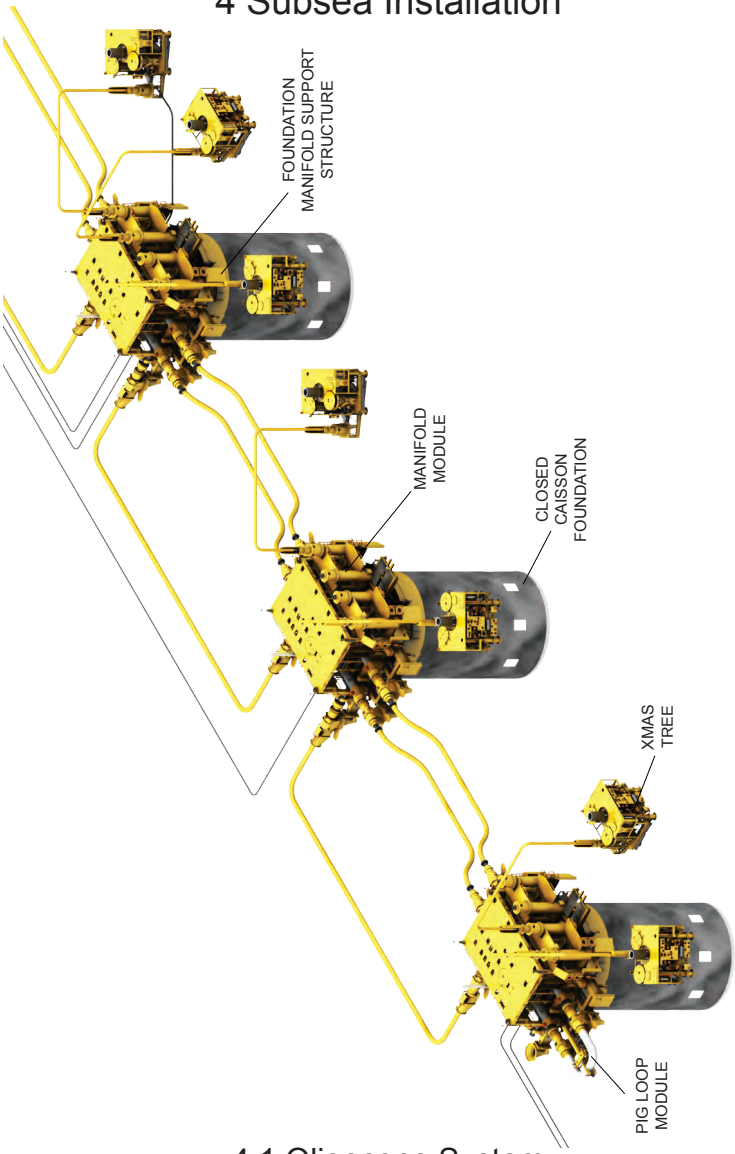

4.1 Oligocene System

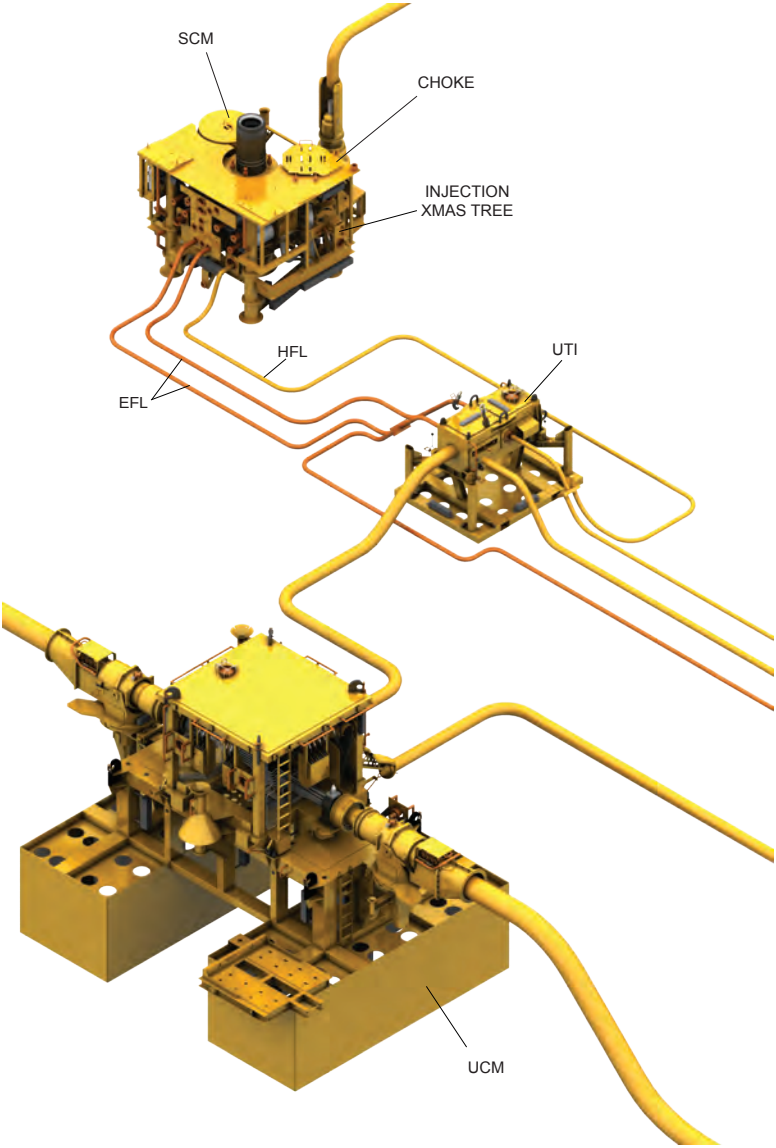

4.2 Miocene System

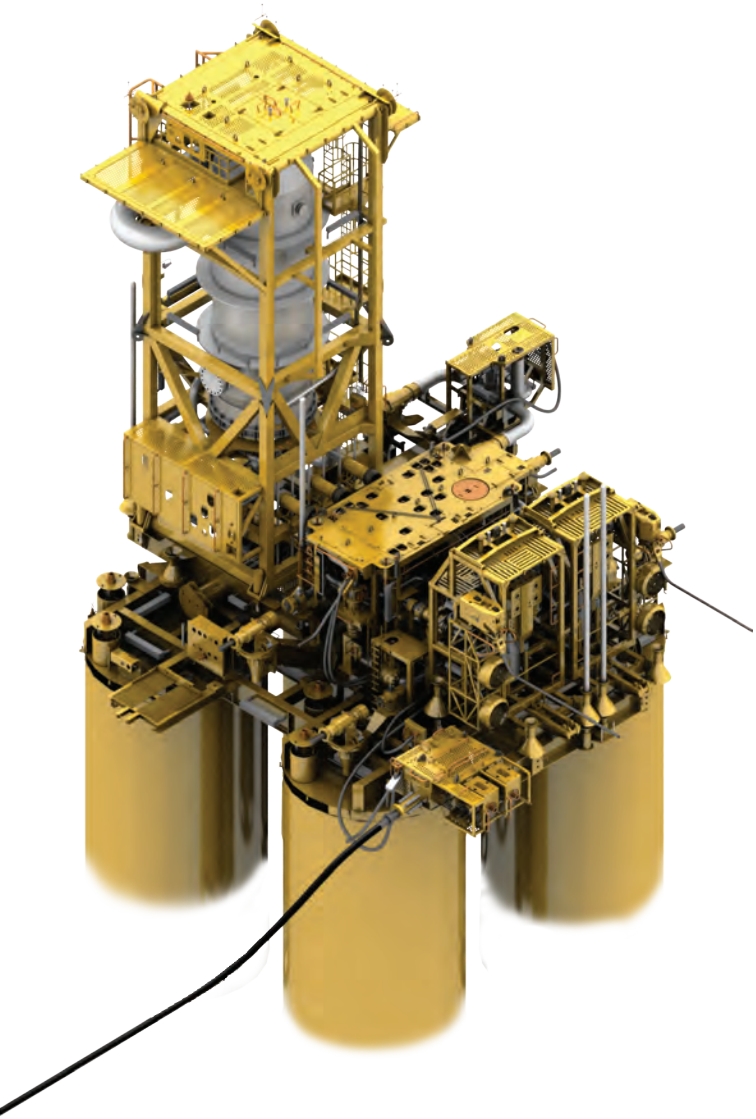

4.3 Subsea Separation System

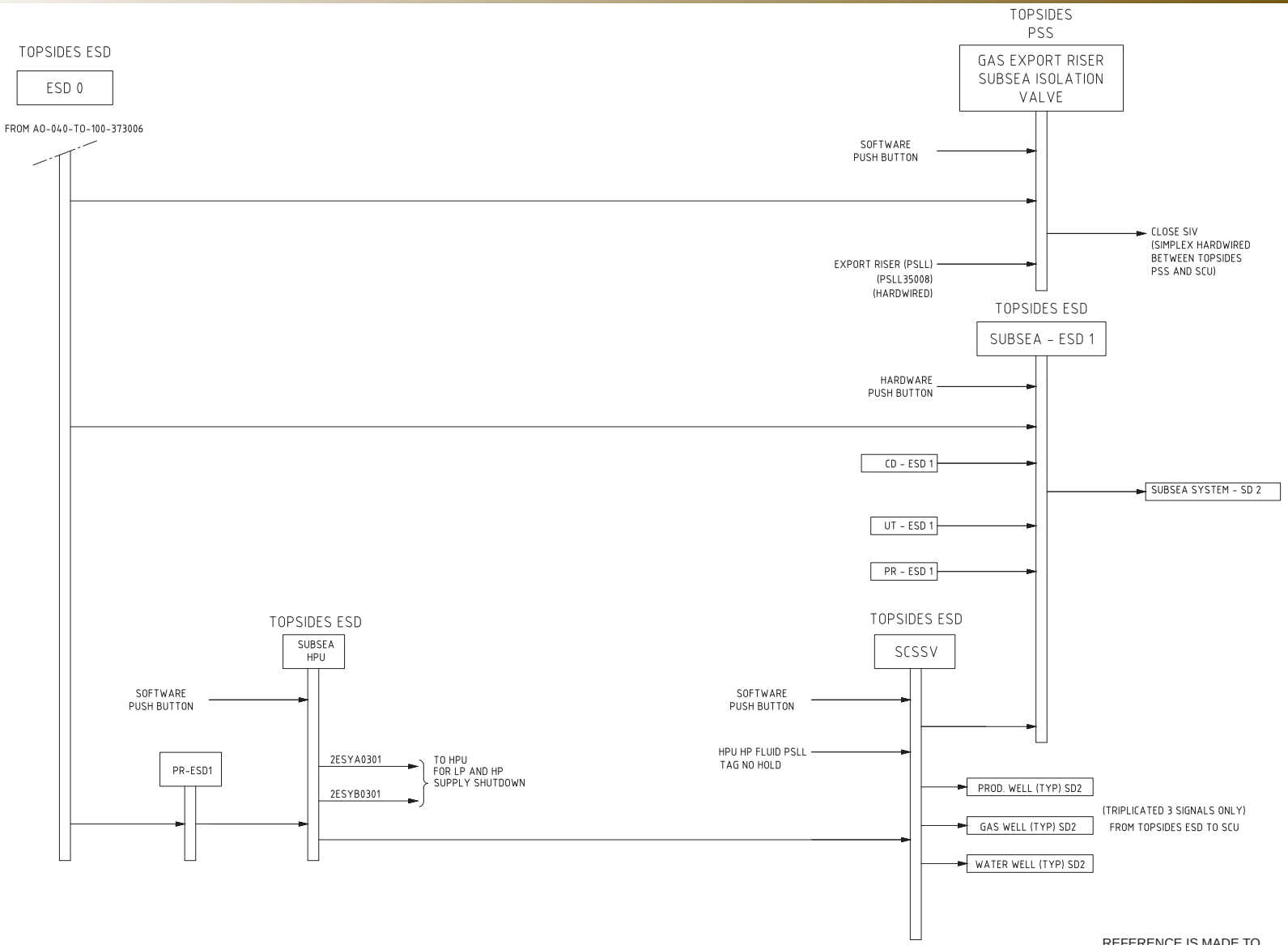

REFERENCE IS MADE TO DA600038965/AO-040-SF-400-150164

4.4 Subsea ESD Safety Bar

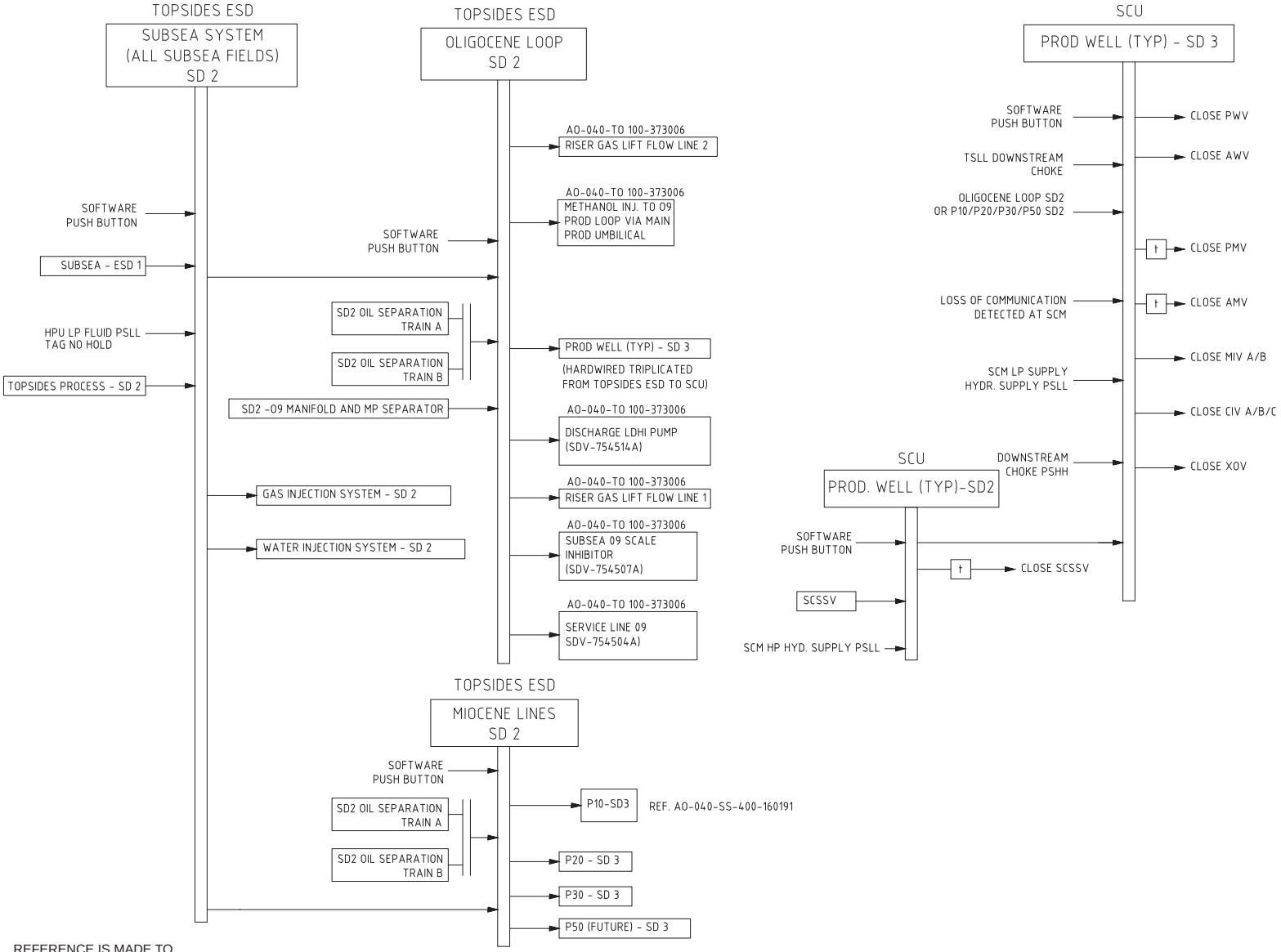

REFERENCE IS MADE TO DA600038965/AO-040-SF-400-150164

Subsea ESD Safety Bar

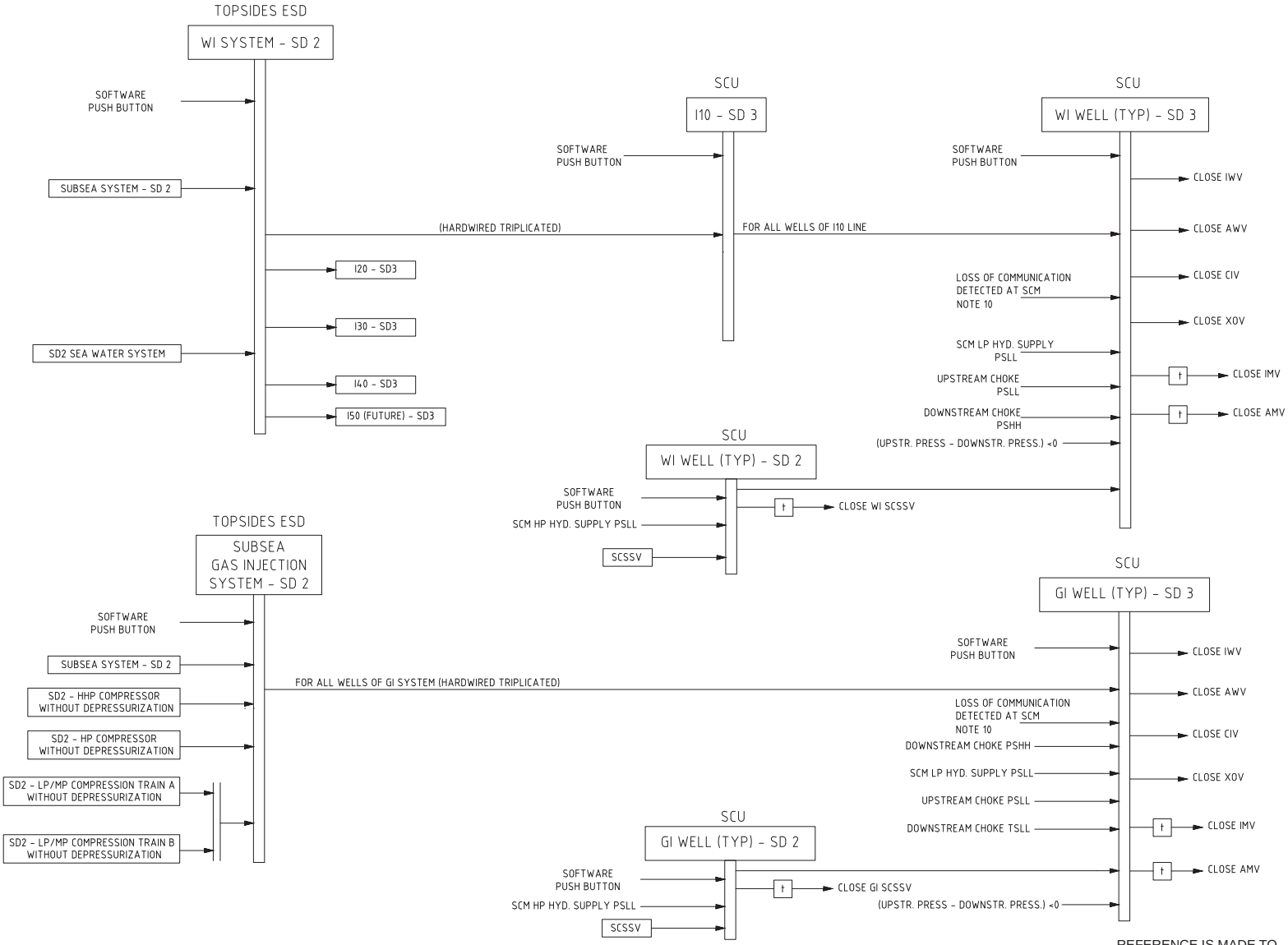

Subsea ESD Safety Bar

REFERENCE IS MADE TO DA600038965/AO-040-SF-400-150164

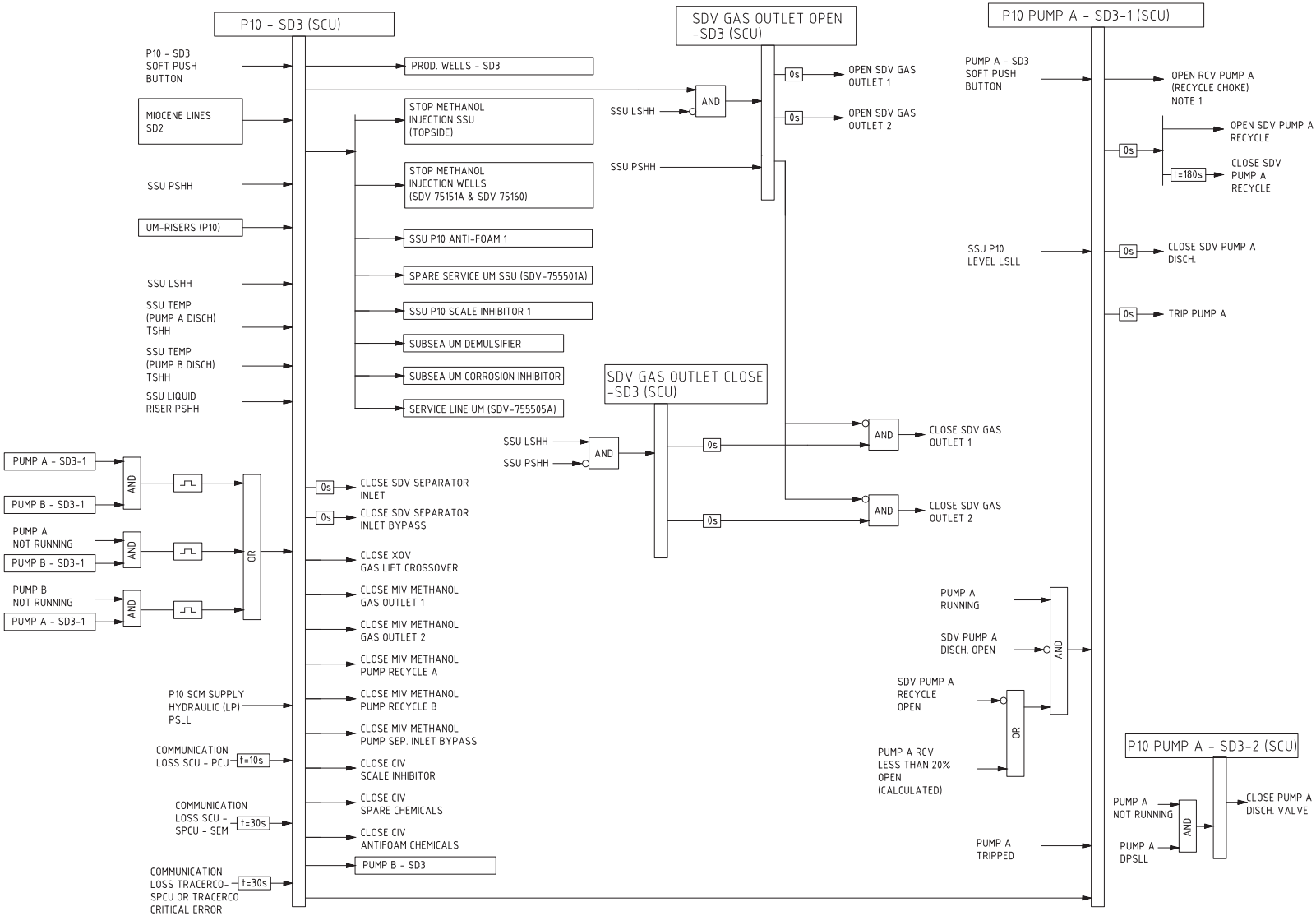

REFERENCE IS MADE TO DA600038965/AO-040-SF-400-150164

Subsea ESD Safety Bar

4.5 Sensor Schematic

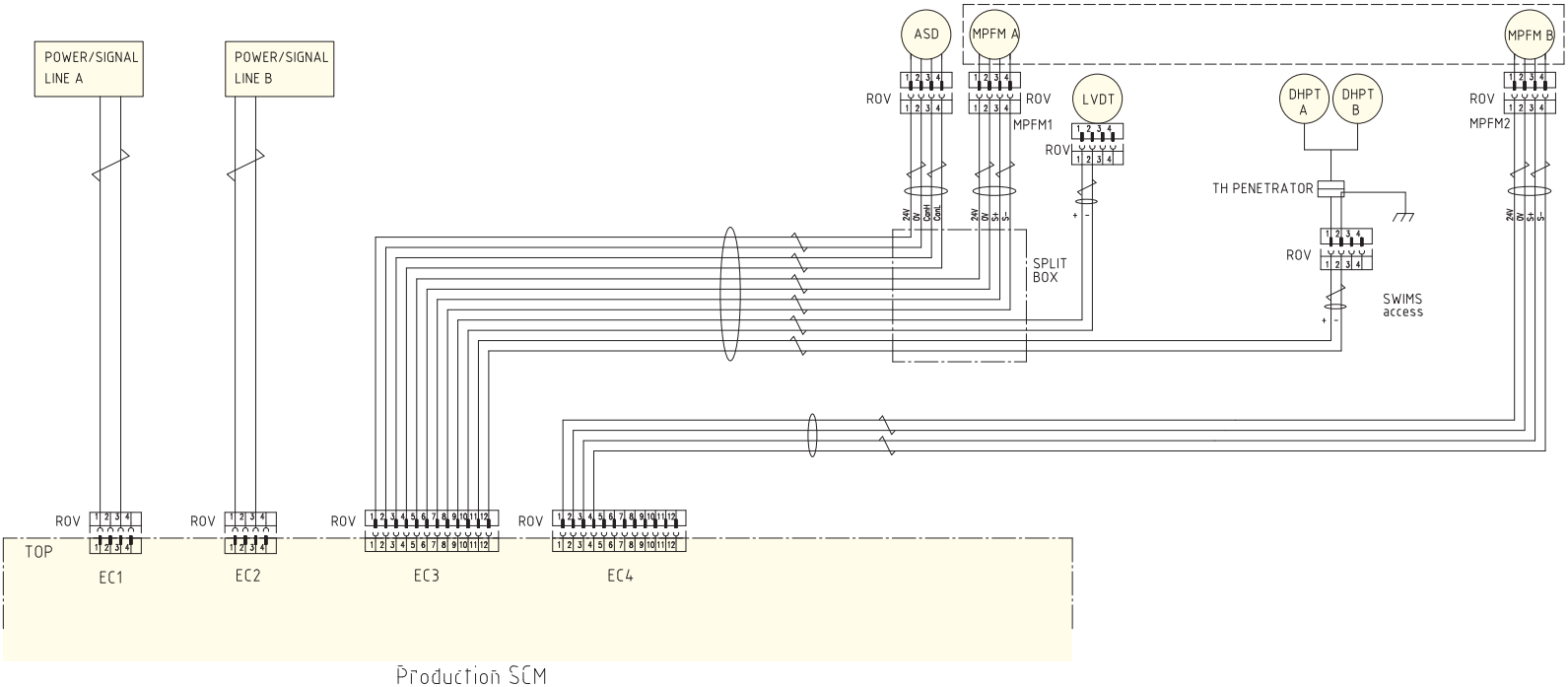

4.5.1 Sensor Schematic Production SCM, bottom

REFERENCE IS MADE TO
DA600032689/AO-040-SG-400-150007

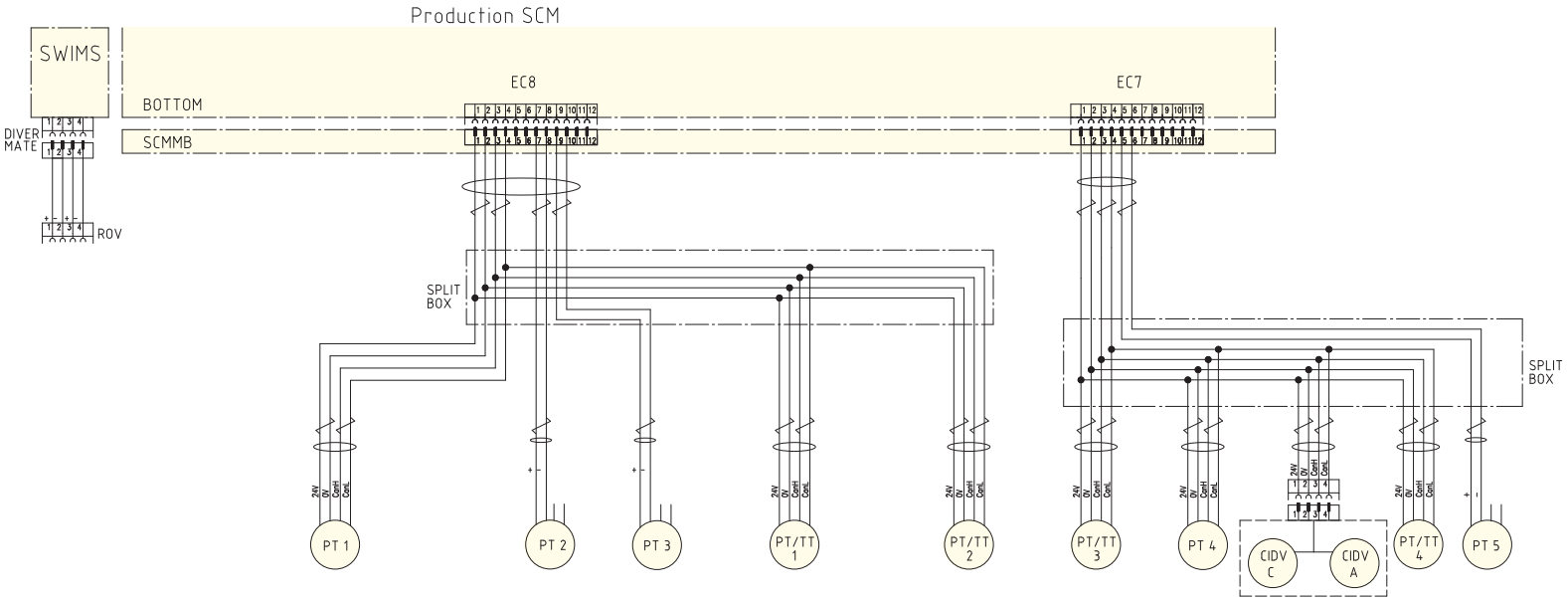

4.5.2 Sensor Schematic Production SCM, top

REFERENCE IS MADE TO
DA600032689/AO-040-SG-400-150007

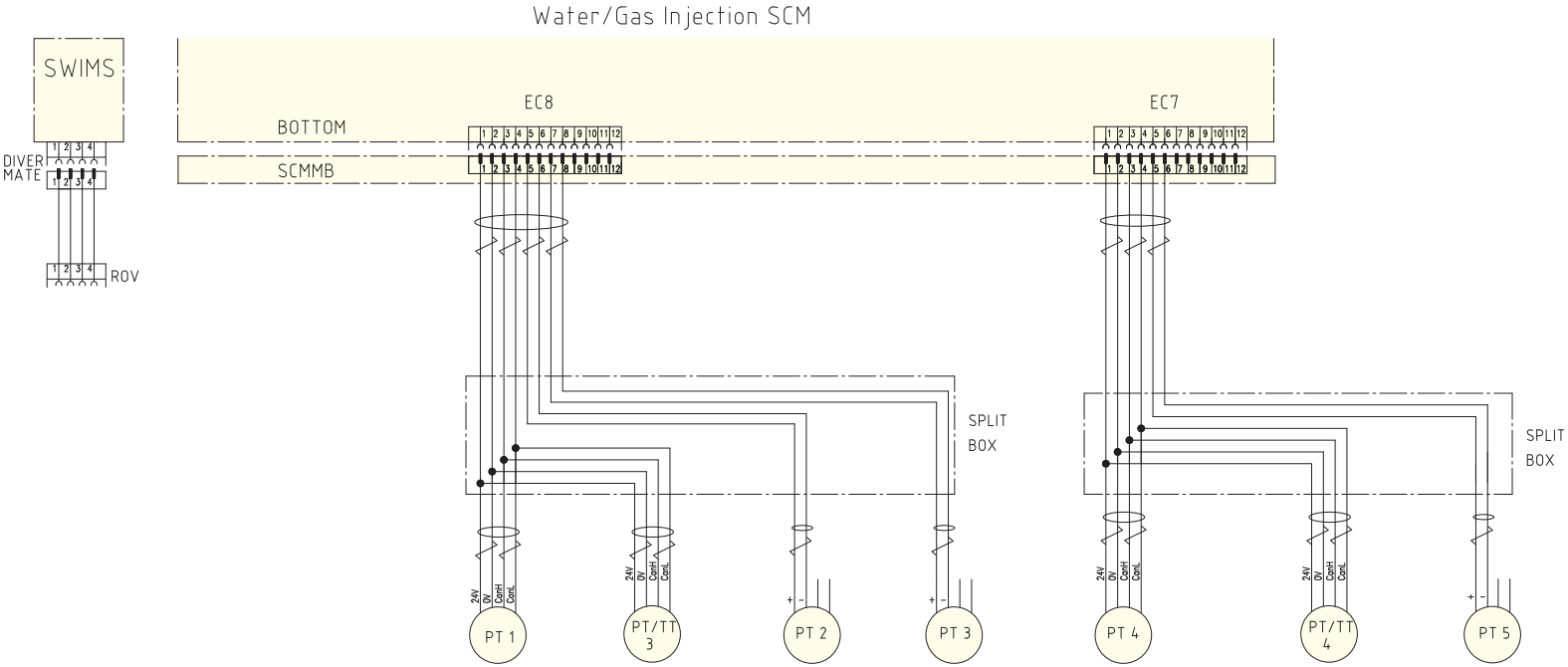

4.5.3 Sensor Schematic Water/Gas Injection SCM, top

REFERENCE IS MADE TO
DA600032689/AO-040-SG-400-150007

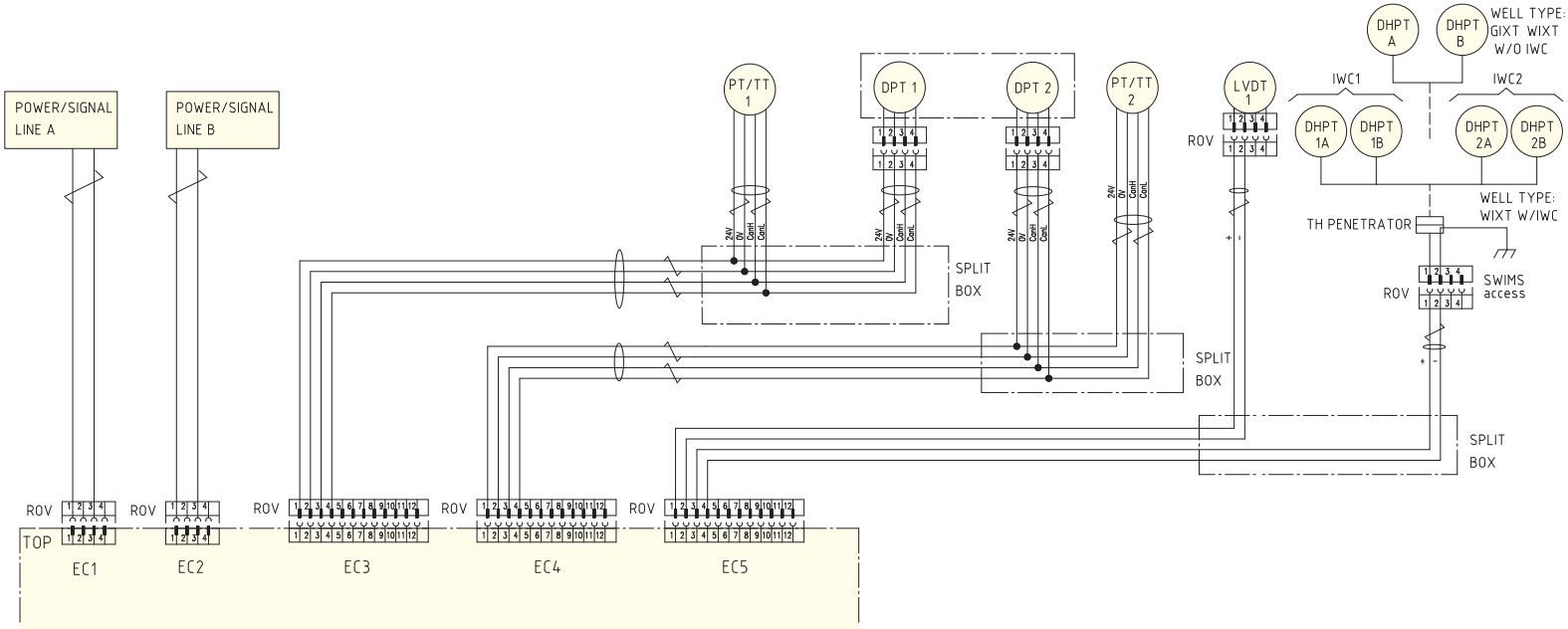

4.5.4 Sensor Schematic Water/Gas Injection SCM, bottom

REFERENCE IS MADE TO DA600032689/AO-040-SG-400-150007

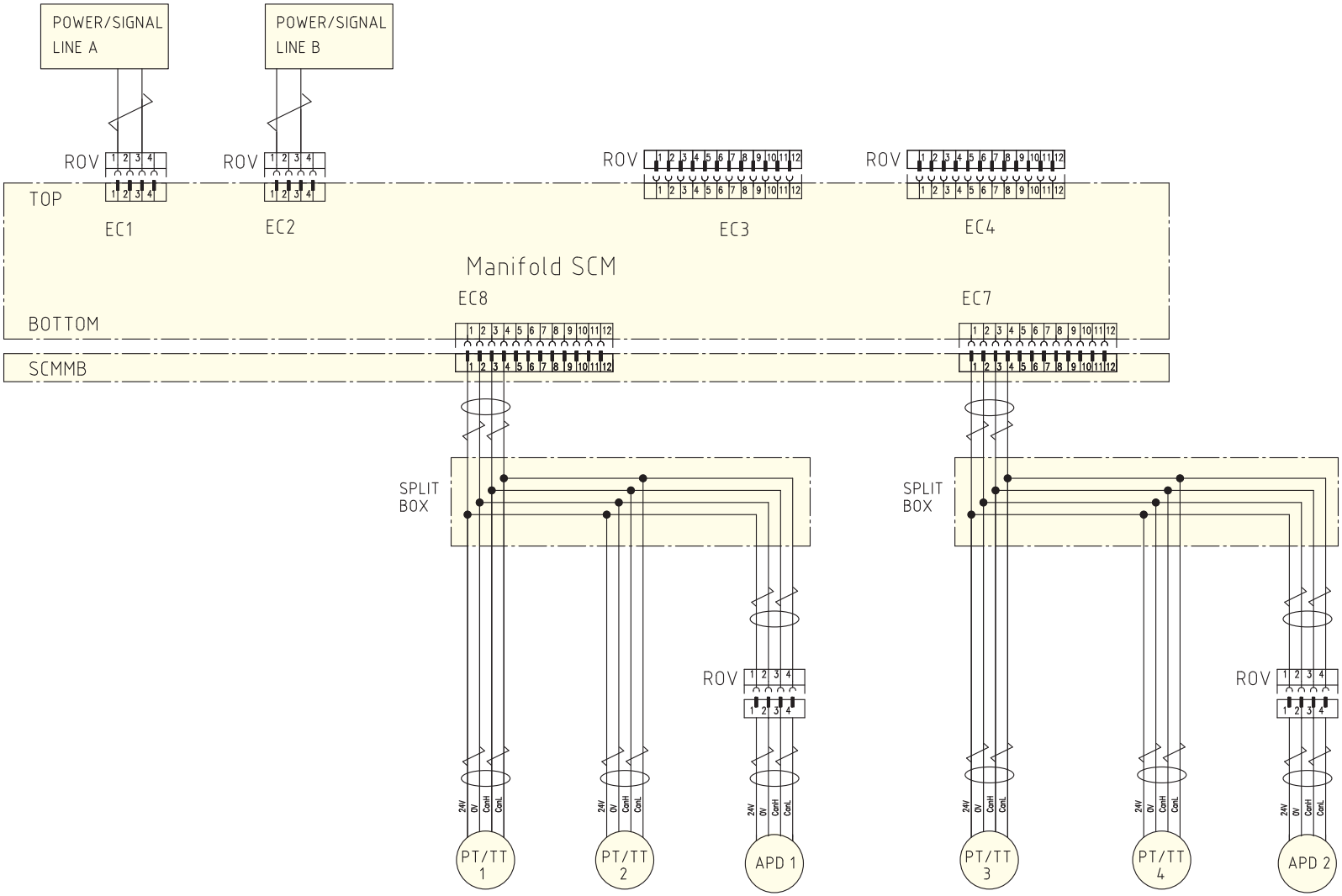

4.5.6 Sensor Schematic Manifold SCM

REFERENCE IS MADE TO
DA600032689/AO-040-SG-400-150007

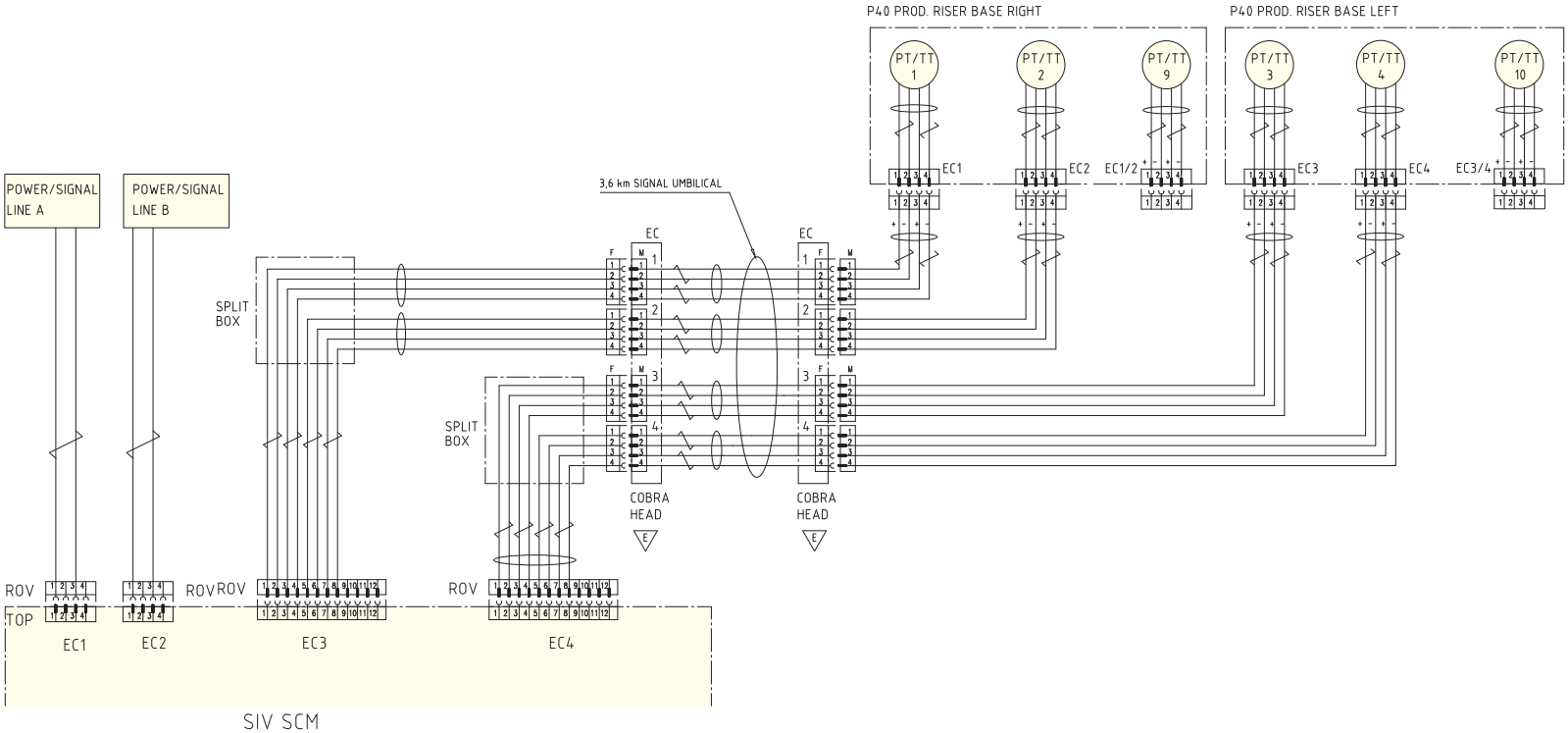

4.5.7 Sensor Schematic SIV SCM, bottom

REFERENCE IS MADE TO
DA600032689/AO-040-SG-400-150007

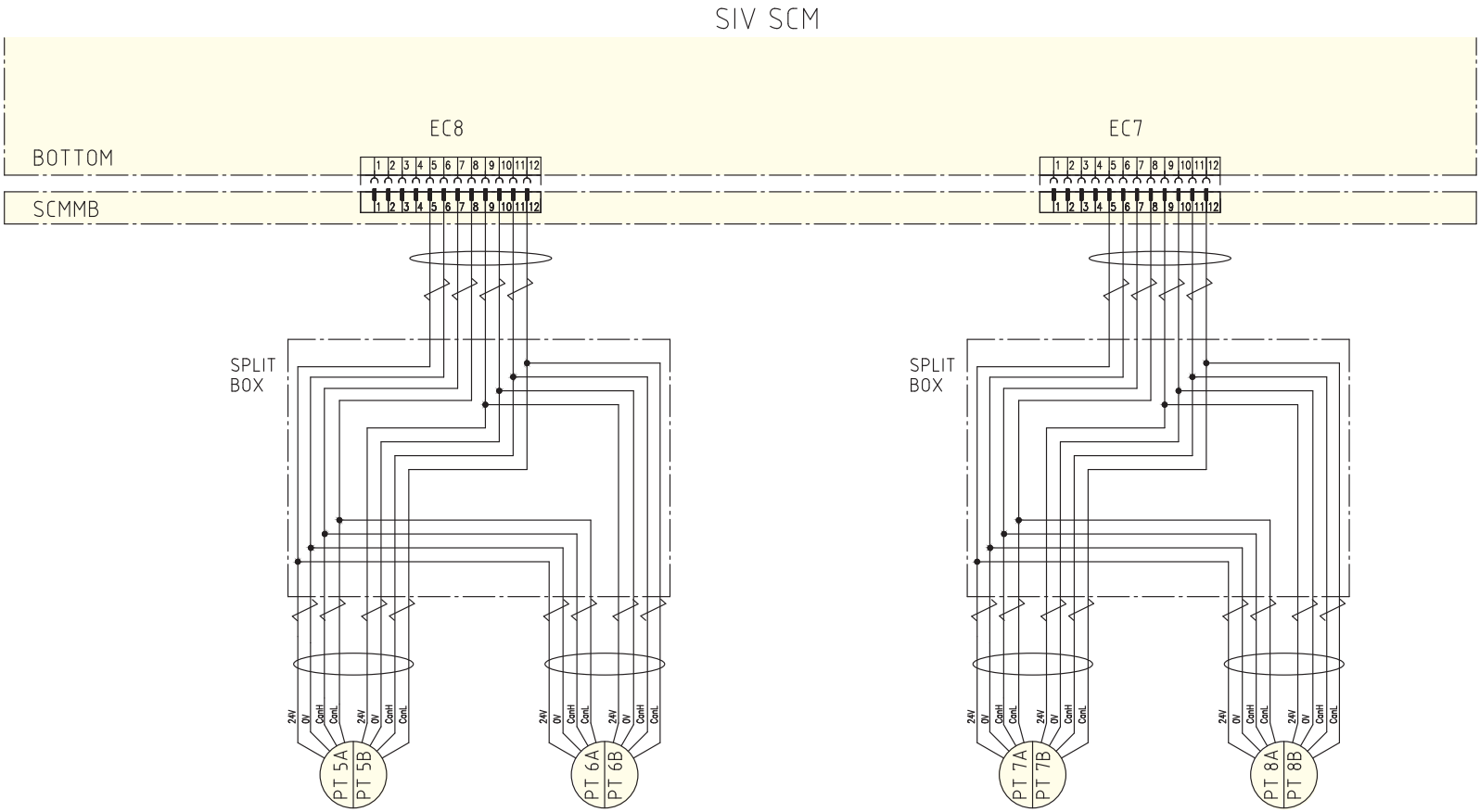

4.5.8 Sensor Schematic SIV SCM, top

REFERENCE IS MADE TO
DA600032689/AO-040-SG-400-150007

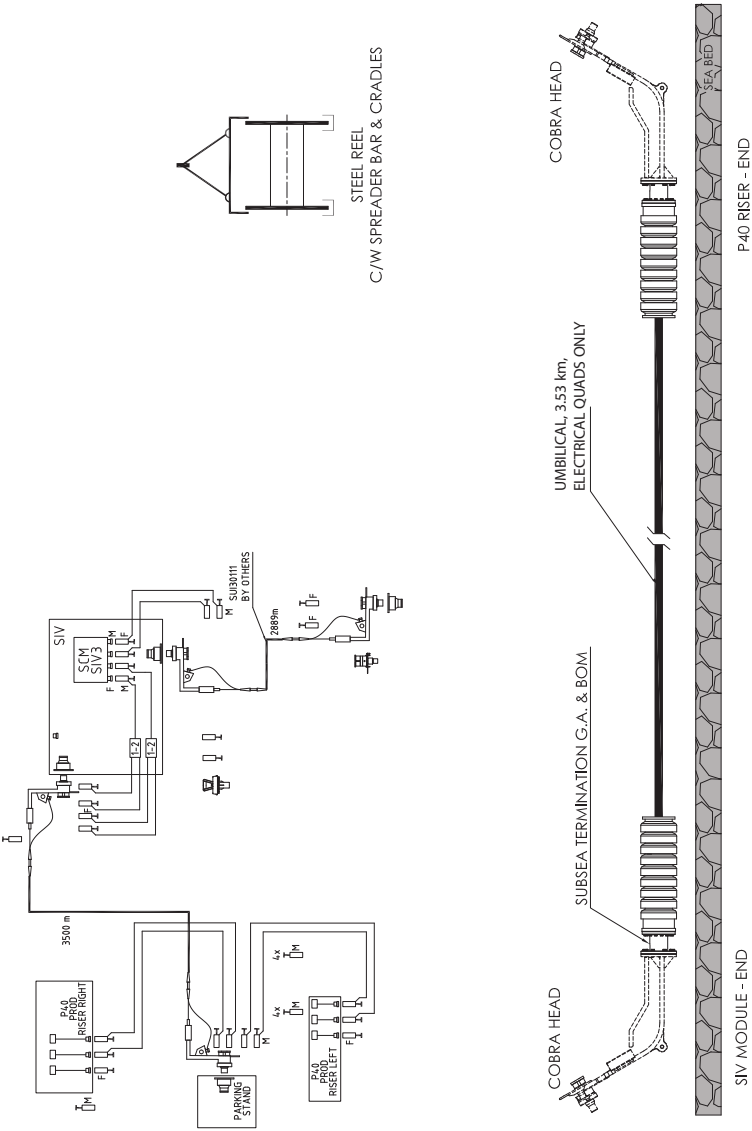

4.6 P40 Electrical Cable

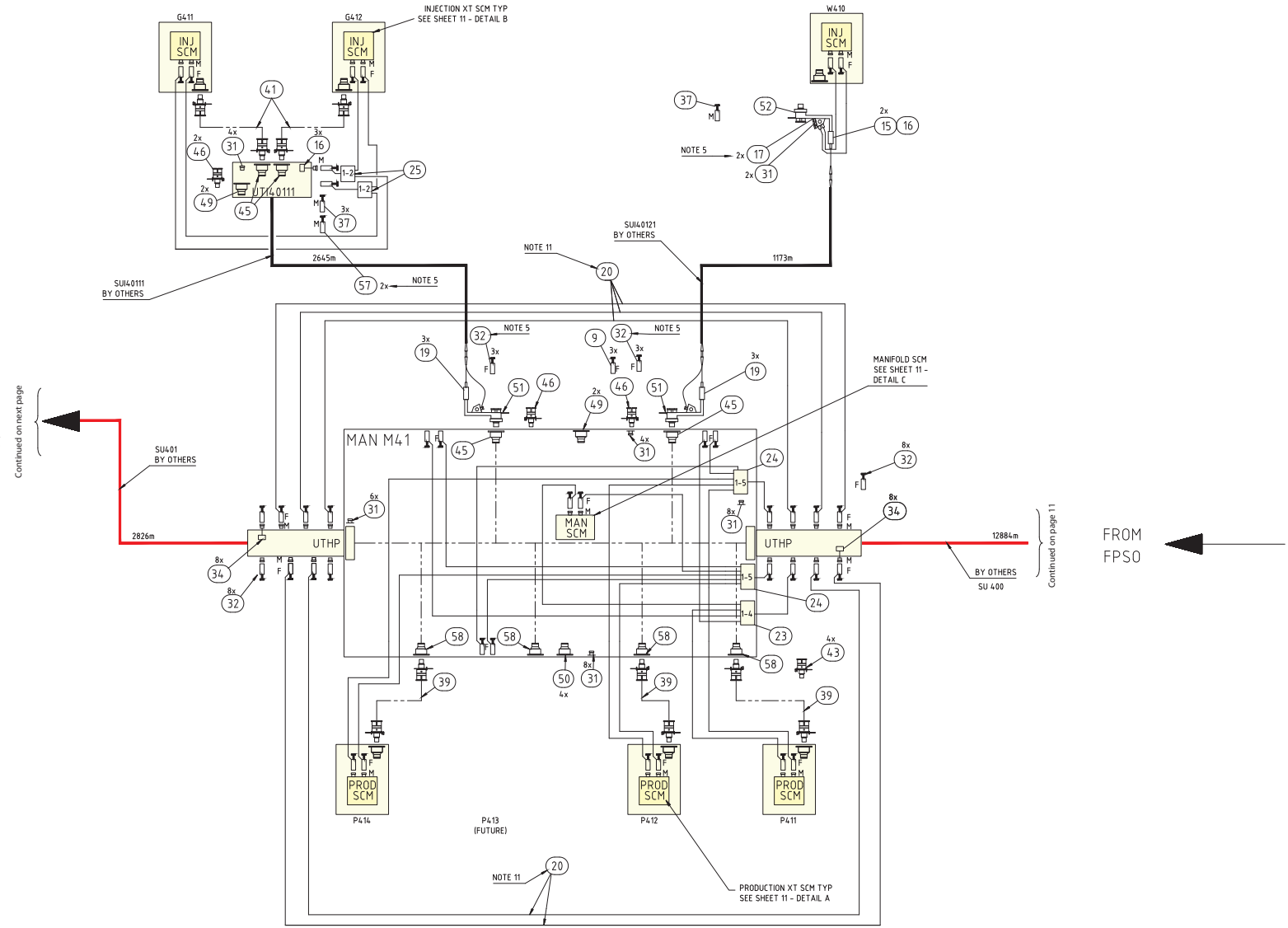

4.7 Control Hydraulic Schematic

REFERENCE IS MADE TO
DA600032394/AO-040-SF-400-150001

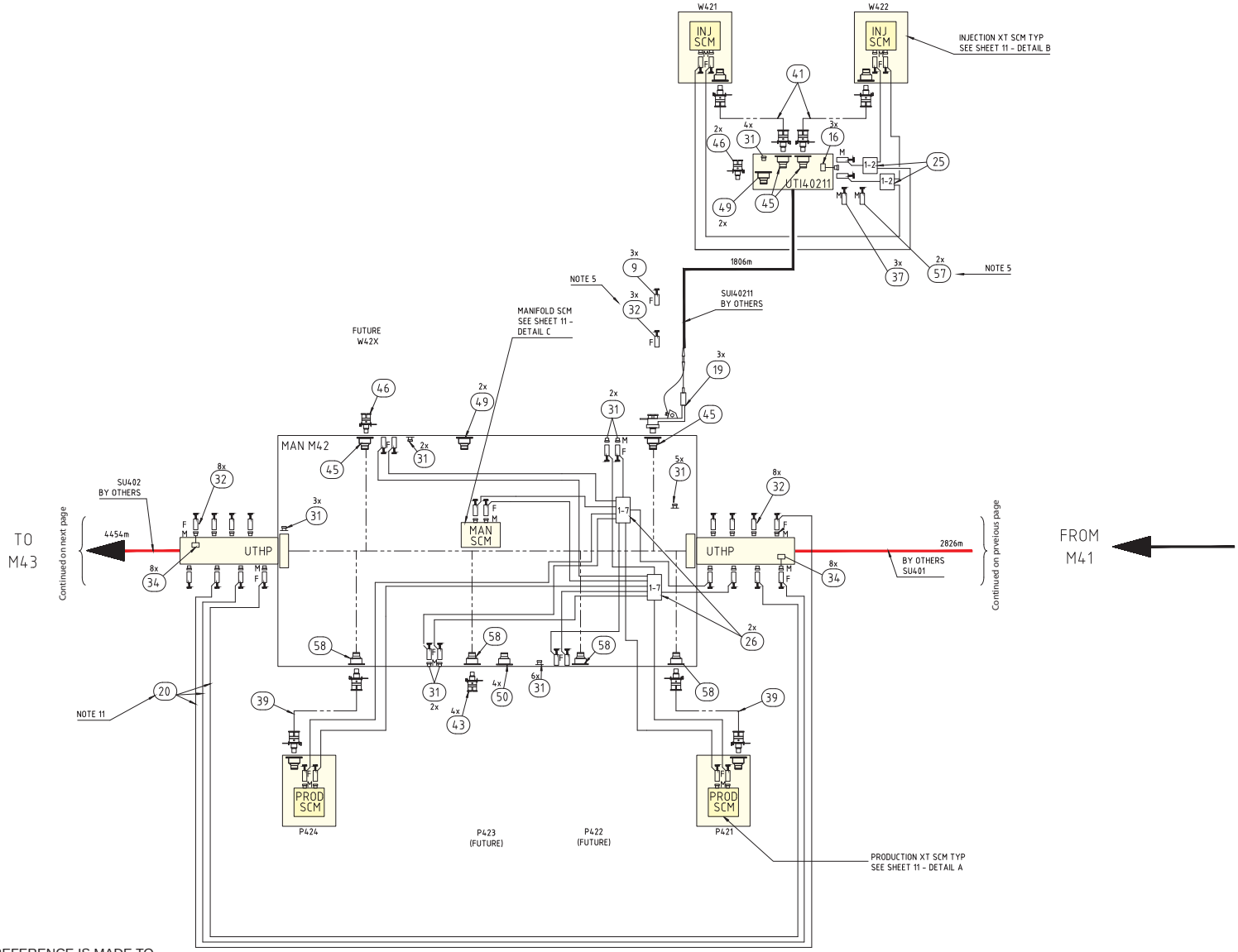

REFERENCE IS MADE TO
DA600032394/AO-040-SF-400-150001

Control Hydraulic Schematic

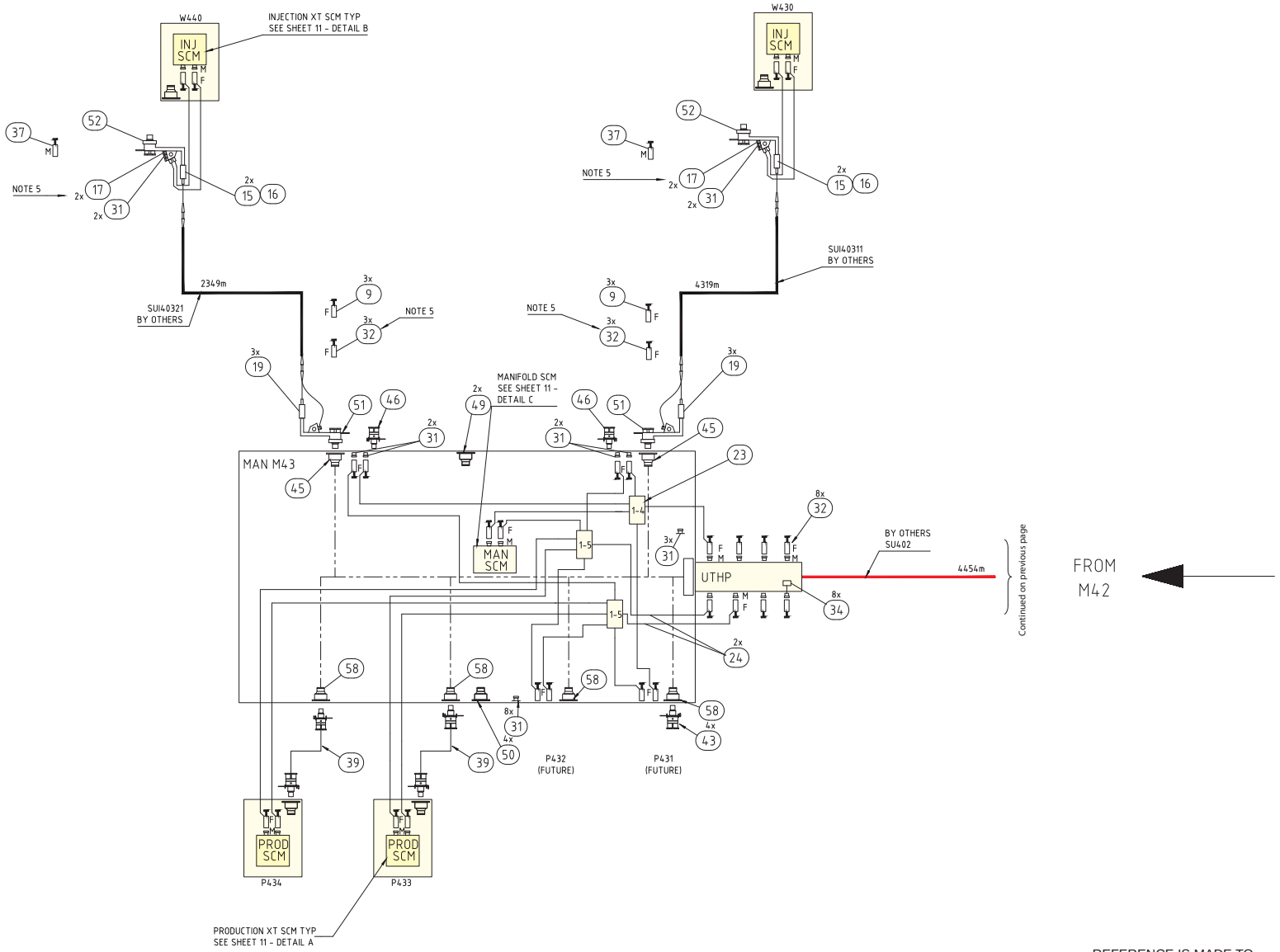

Control Hydraulic Schematic

REFERENCE IS MADE TO
DA600032394/AO-040-SF-400-150001

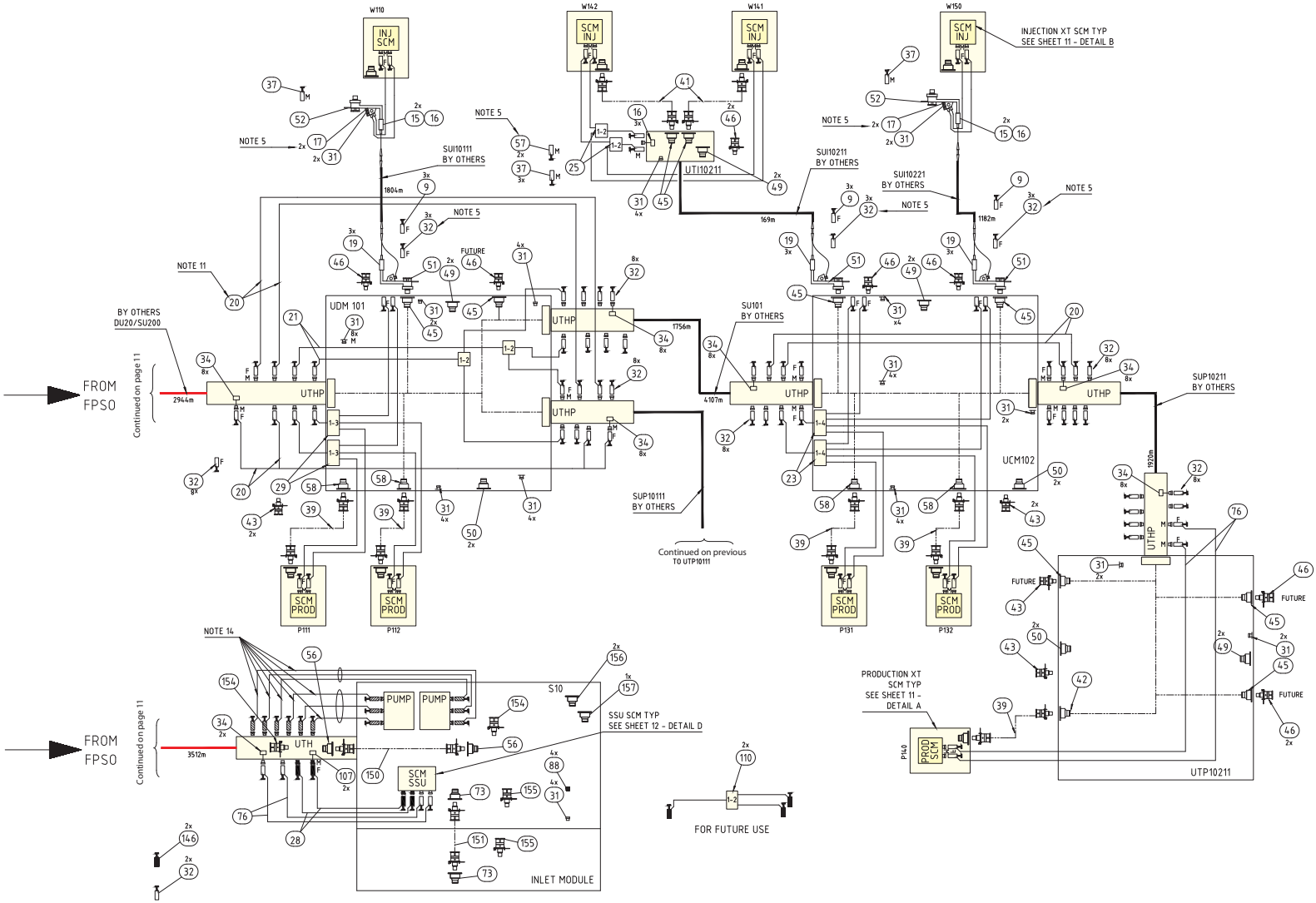

REFERENCE IS MADE TO
DA600032394/AO-040-SF-400-150001

Control Hydraulic Schematic

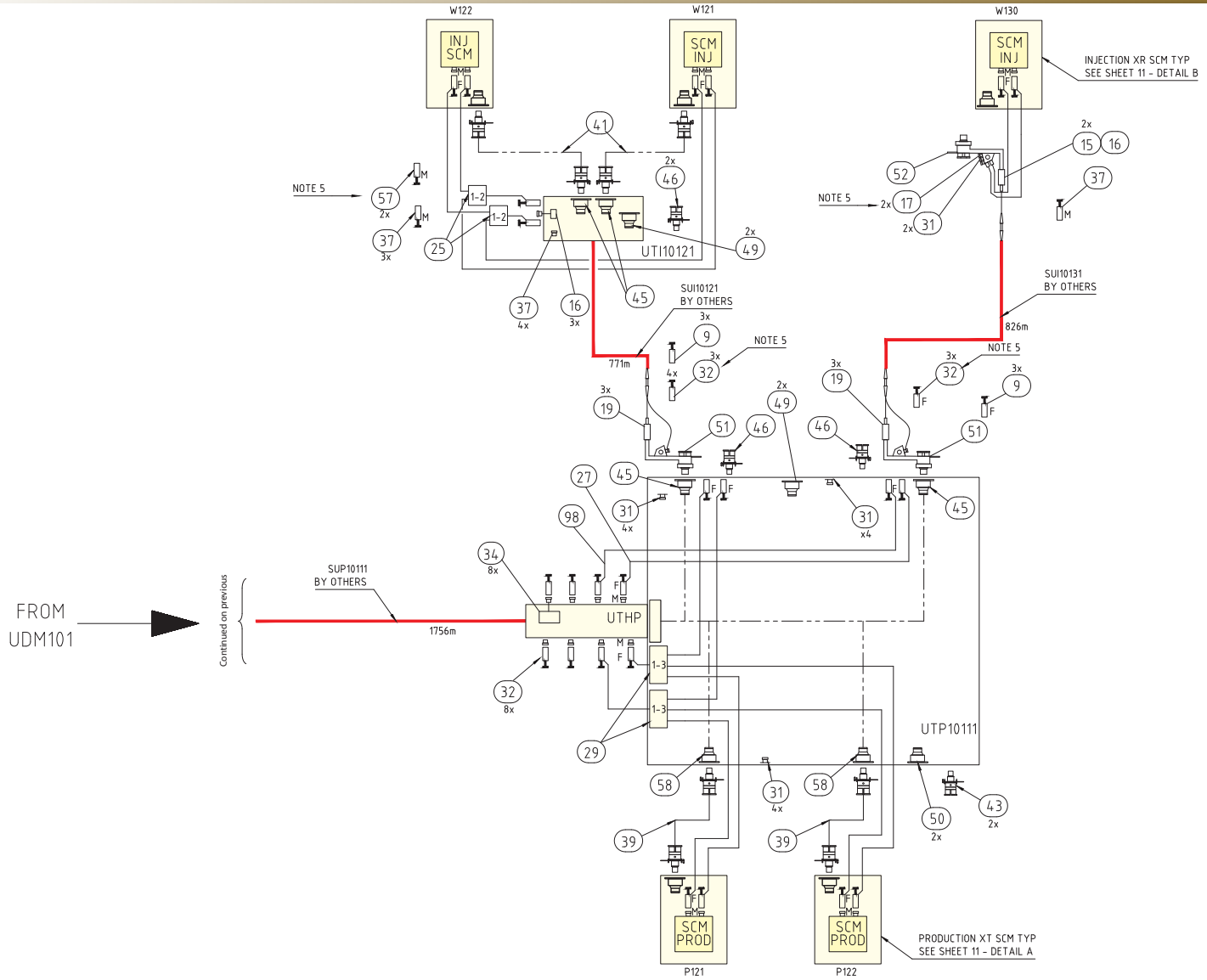

Control Hydraulic Schematic

REFERENCE IS MADE TO
DA600032394/AO-040-SF-400-150001

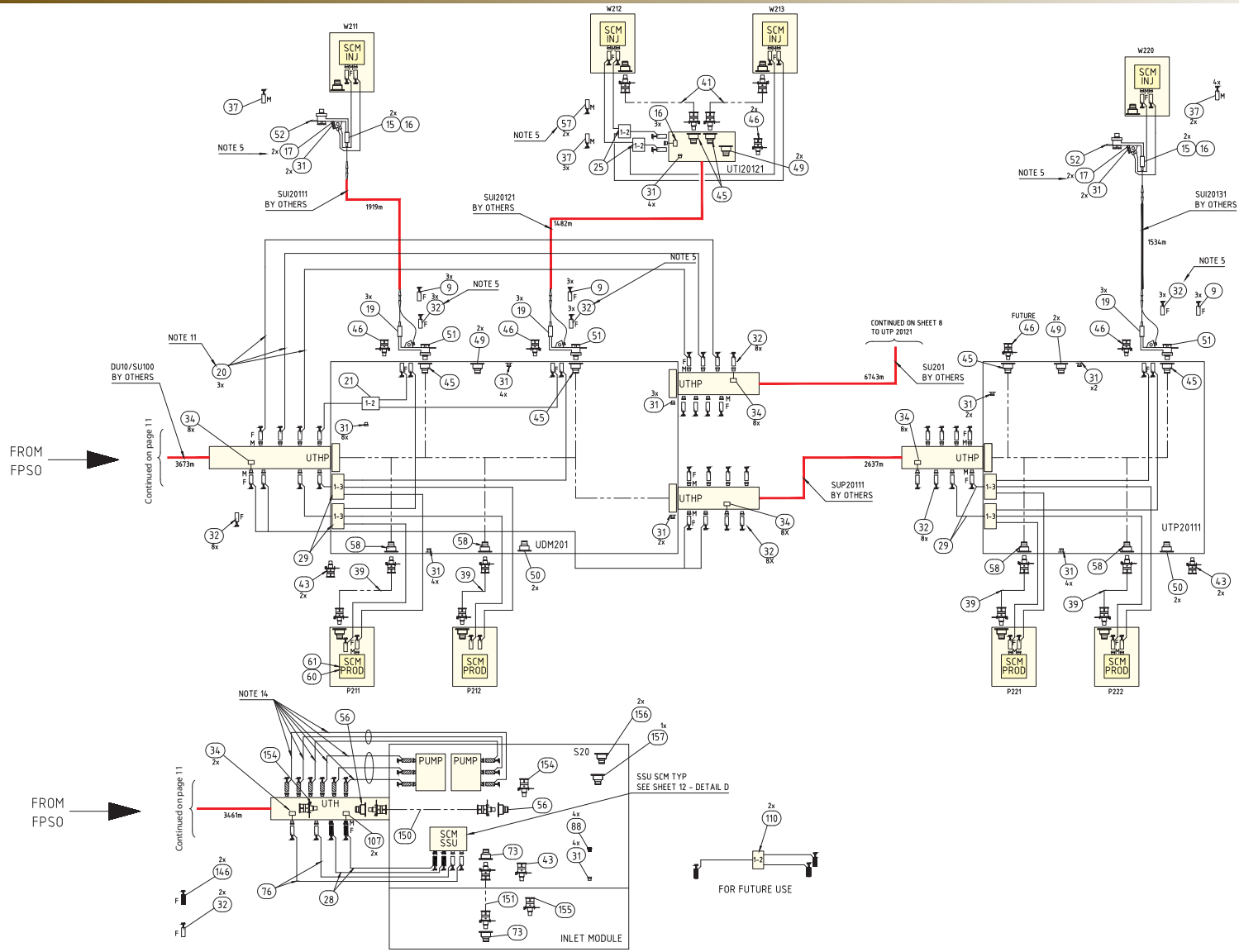

REFERENCE IS MADE TO DA600032394/AO-040-SF-400-150001

Control Hydraulic Schematic

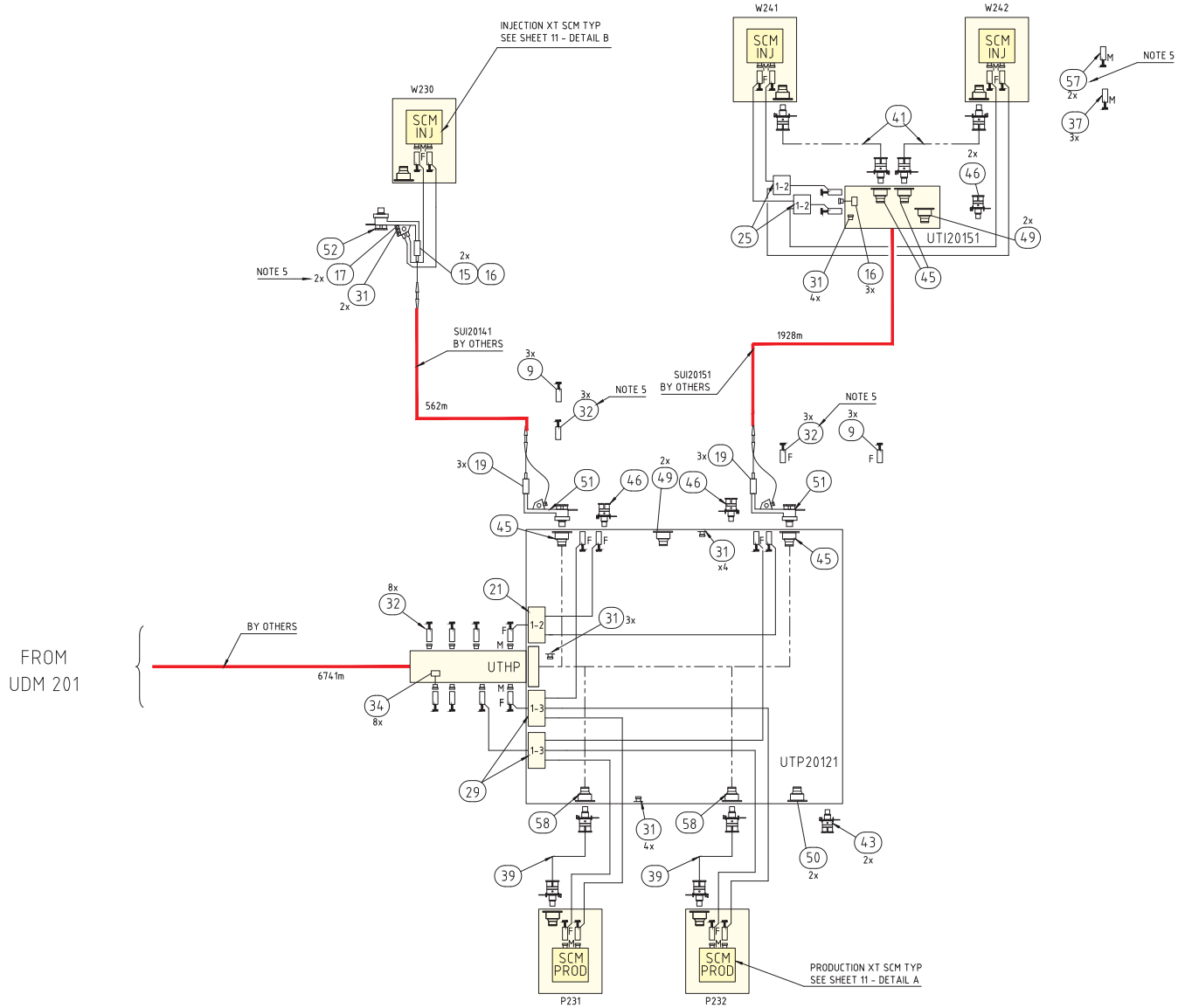

Control Hydraulic Schematic

REFERENCE IS MADE TO
DA600032394/AO-040-SF-400-150001

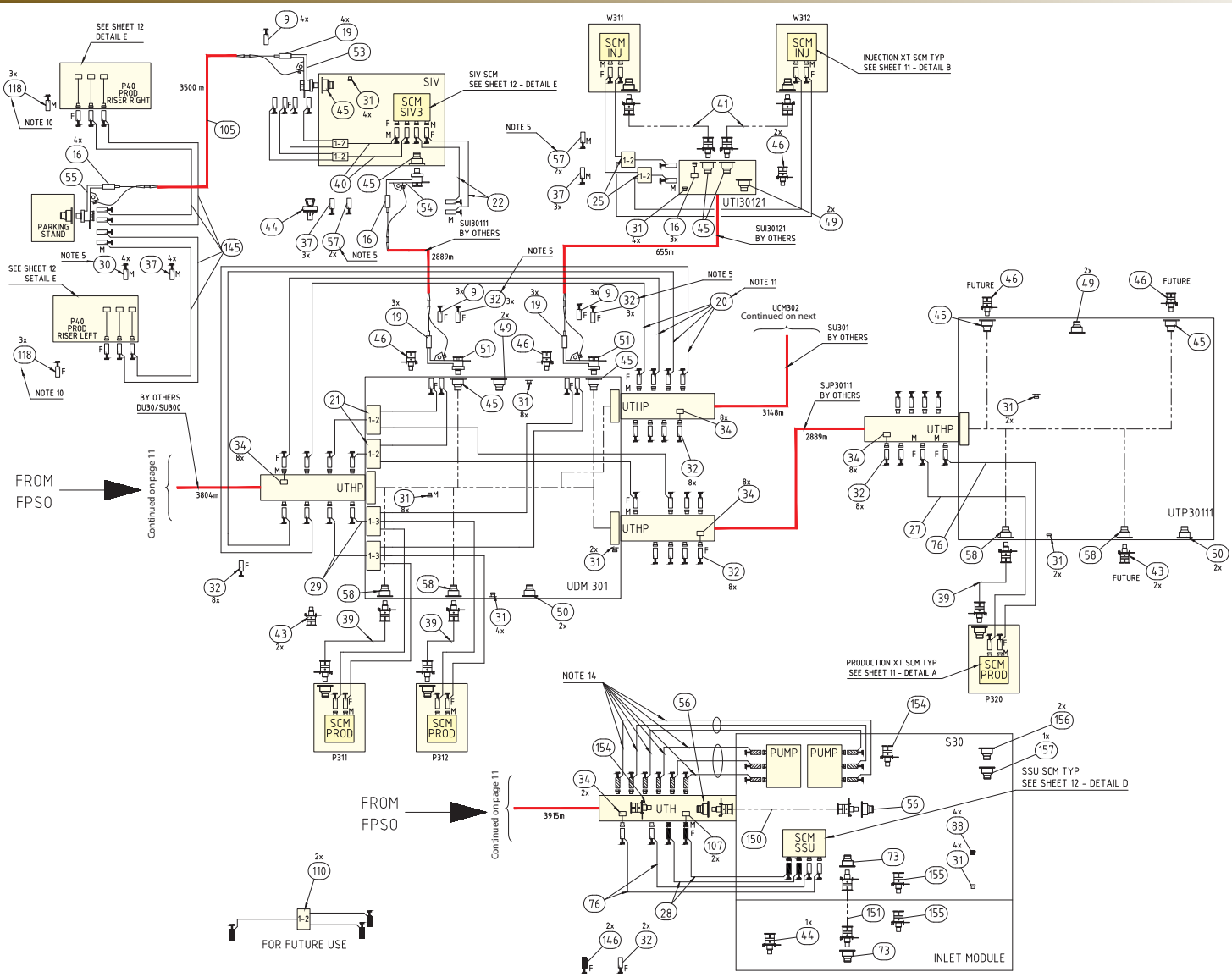

REFERENCE IS MADE TO
DA600032394/AO-040-SF-400-150001

Control Hydraulic Schematic

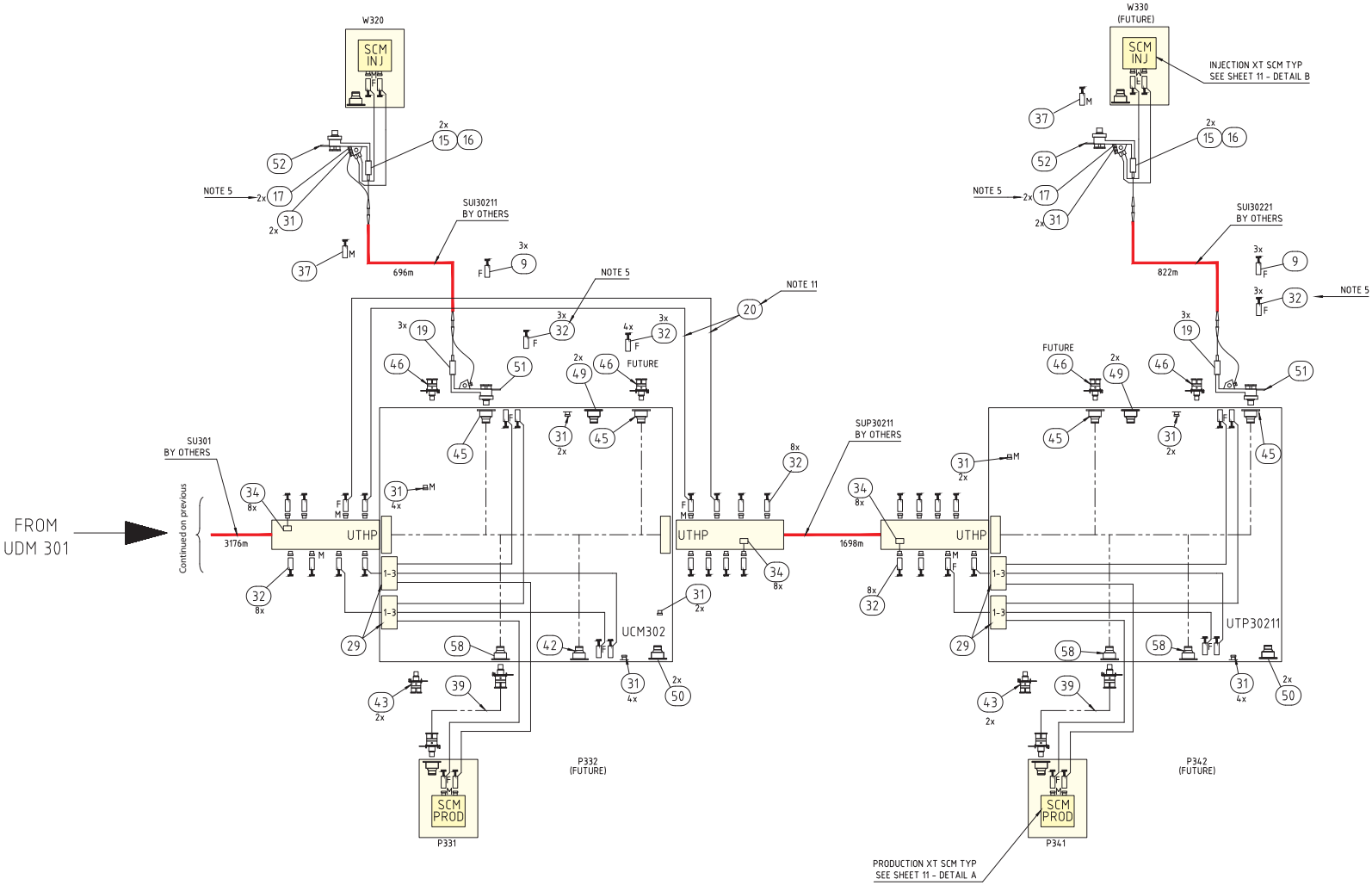

Control Hydraulic Schematic

REFERENCE IS MADE TO DA600032394/AO-040-SF-400-150001

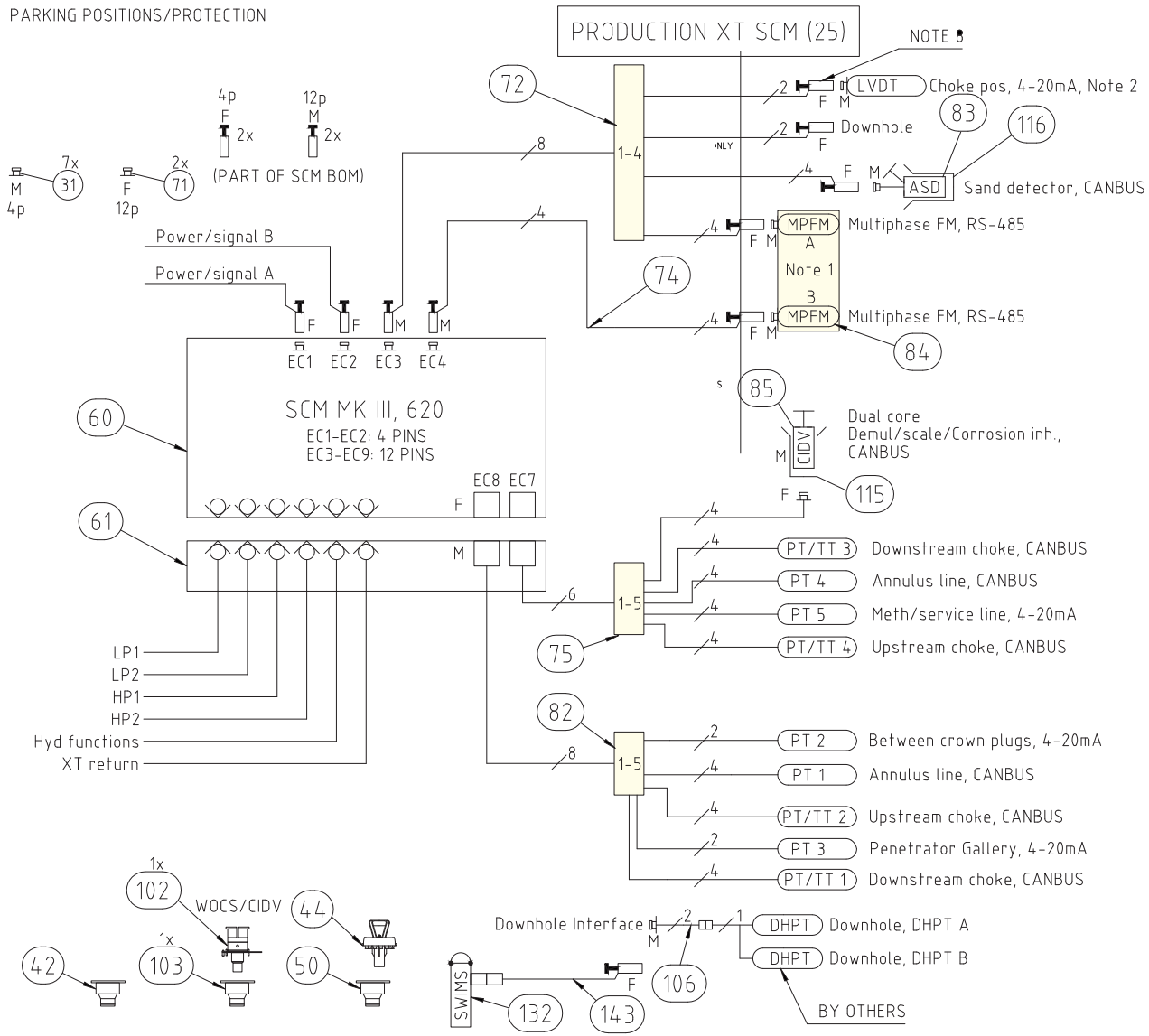

SCM CONFIGURATION
LP HYD FUNCTIONS
1. HC3: PMV
2. HC4: PWV
3. HC5: PCV (O)
4. HC6: PCV (C)
5. HC7: AMV
6. HC8: AWV
7. HC9: AAV WOCS MODE C
8. HC10: XOV
9. HC11: MIV A
10. HC12: MIV B
11. HC13: BLINDED
12. HC14: CIV A
13. HC15: CIV B
14. HC16: CIV C
15. HC17: BLINDED
16. HC18: BLINDED
17. HC19: BLINDED
18. HC20: BLINDED
HP HYD FUNCTIONS
1. HC21: BLINDED
2. HC22: BLINDED
3. HC23: BLINDED
4. HC24: BLINDED
5. HC25: SCSSV OPEN
6. HC26: NOT IN USE
HYD SUPPLY/RETURN LINE
1. HC1: LP1 supply
2. HC2: LP2 supply
3. HC51: HP1 supply
4. HC52: HP2 supply
5. HC61: RETURN

REFERENCE IS MADE TO
DA600032394/AO-040-SF-400-150001

Control Hydraulic Schematic

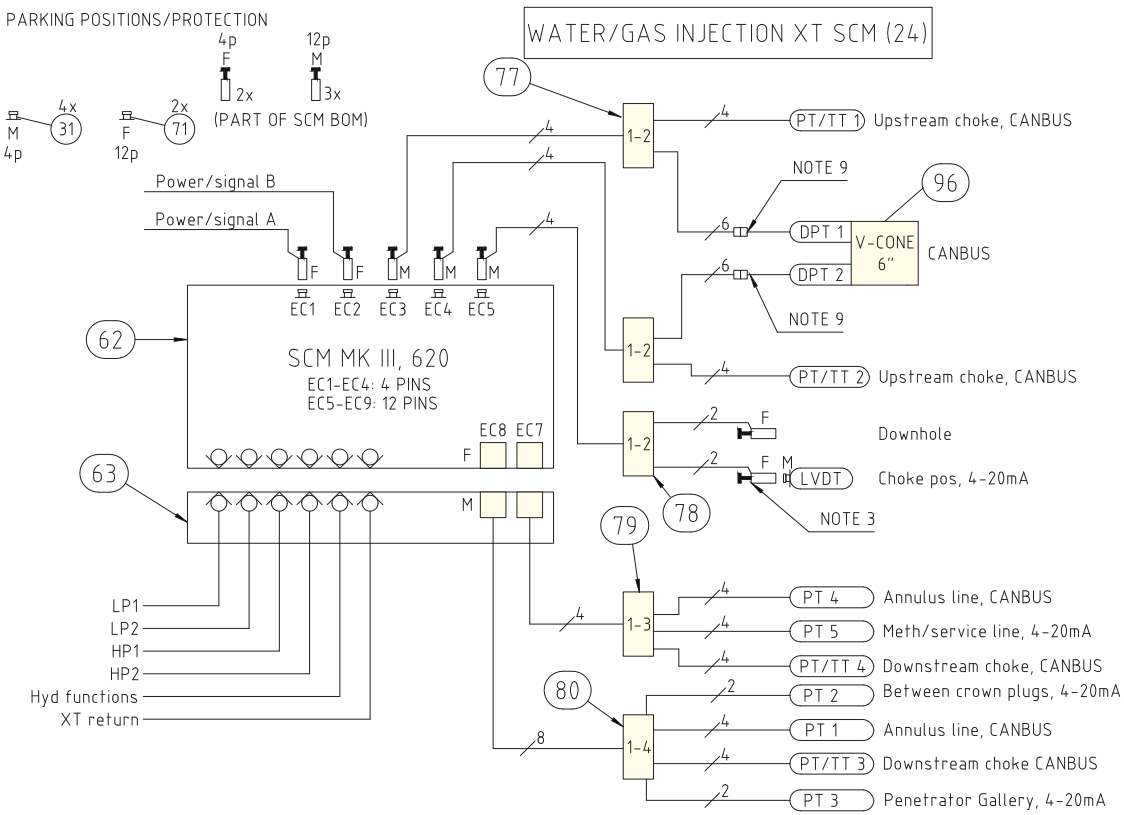

SCM CONFIGURATION

LP HYD FUNCTIONS
1. HC3: IMV
2. HC4: IWV
3. HC5: ICV (O)
4. HC6: ICV (C)
5. HC7: AMV
6. HC8: AWV
7. HC9: AAV WOCS MODE ONLY
8. HC10: XOV
9. HC11: MIVA
10. HC12: BLINDED
11. HC13: BLINDED
12. HC14: BLINDED
13. HC15: BLINDED
14. HC16: BLINDED
15. HC17: BLINDED
16. HC18: BLINDED
17. HC19: BLINDED
18. HC20: BLINDED
HP HYD FUNCTIONS
1. HC21: BLINDED
2. HC22: IWC 2
3. HC23/53: IWC 1/2
4. HC24/54: BLINDED
5. HC25/55: SCSSV OPEN/IWC 1
6. HC26/56: SCSSV FLUSHING
HYD SUPPLY/RETURN LINES
1. HC1: LP1 SUPPLY
2. HC2: LP2 SUPPLY
3. HC51: HP1 SUPPLY
4. HC52: HP2 SUPPLY
5. HC61: RETURN

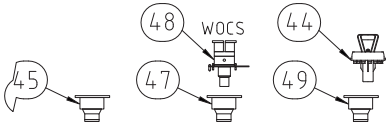

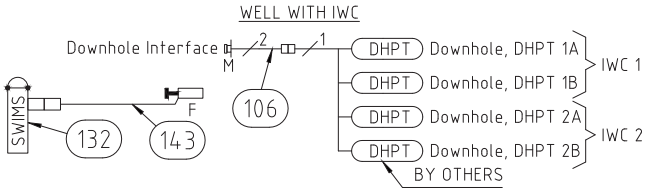

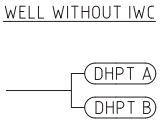

DETAIL B

Control Hydraulic Schematic

REFERENCE IS MADE TO
DA600032394/AO-040-SF-400-150001

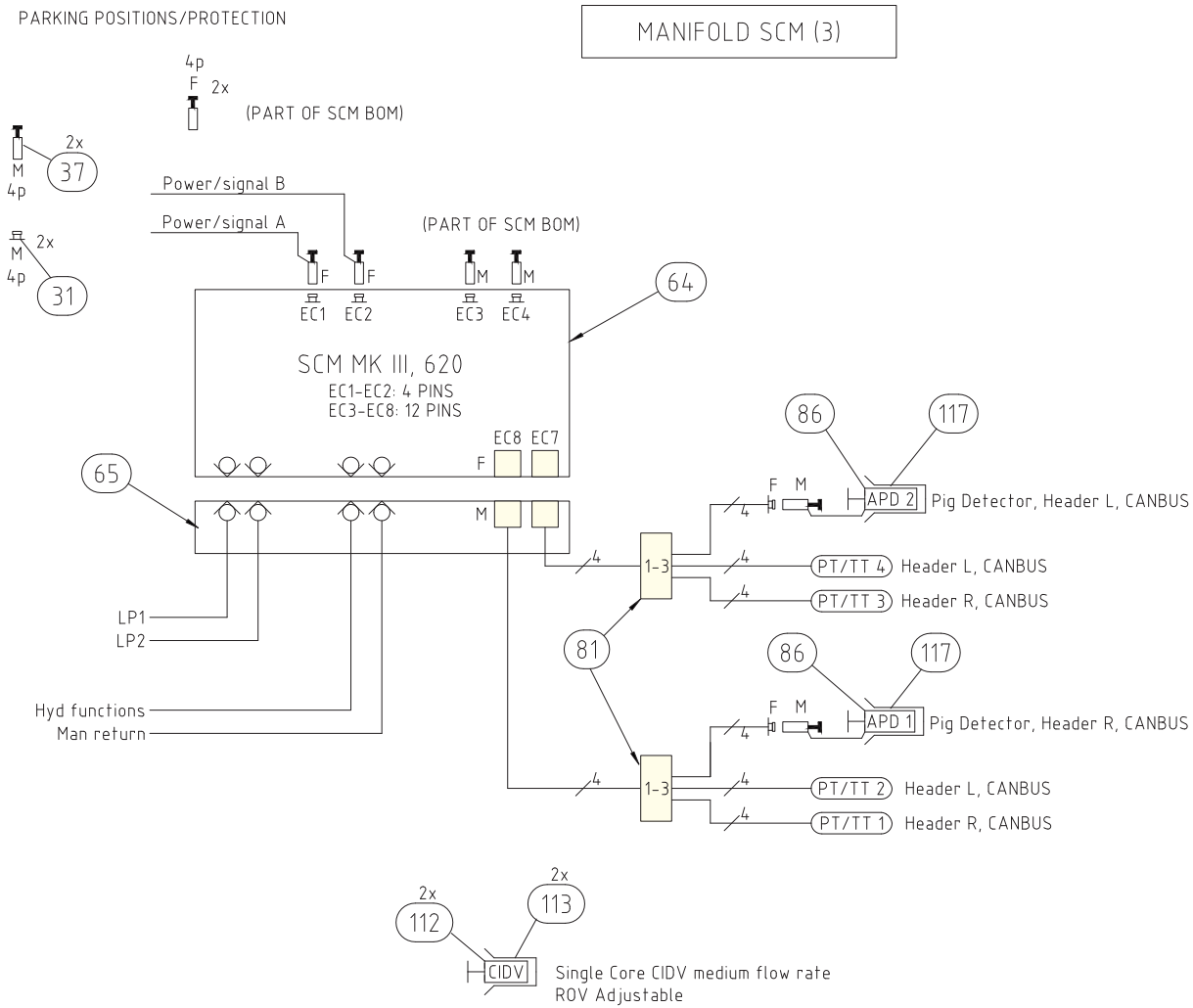

SCM CONFIGURATION

LP HYD FUNCTIONS
1. HC3: HV L
2. HC4: HV R
3. HC5: BV01 L
4. HC6: BV01 R
5. HC7: BV02 L
6. HC8: BV02 R
7. HC9: BV03 L
8. HC10: BV03 R
9. HC11: BV04 L
10. HC12: BV04 R
11. HC13: CIV R
12. HC14: CIV L
13. HC15: MIV
14. HC16: BLINDED
15. HC17: BLINDED
16. HC18: BLINDED
17. HC19: BLINDED
18. HC20: BLINDED
19. HC21: NOT USED, SIV ONLY
20. HC22: BLINDED
21. HC23: BLINDED
22. HC24: BLINDED
23. HC25: BLINDED
24. HC26: BLINDED
HYD SUPPLY/RETURN LINES
1. HC1: LP1 SUPPLY
2. HC2: LP2 SUPPLY
5. HC61: RETURN

DETAIL C

REFERENCE IS MADE TO
DA600032394/AO-040-SF-400-150001

Control Hydraulic Schematic

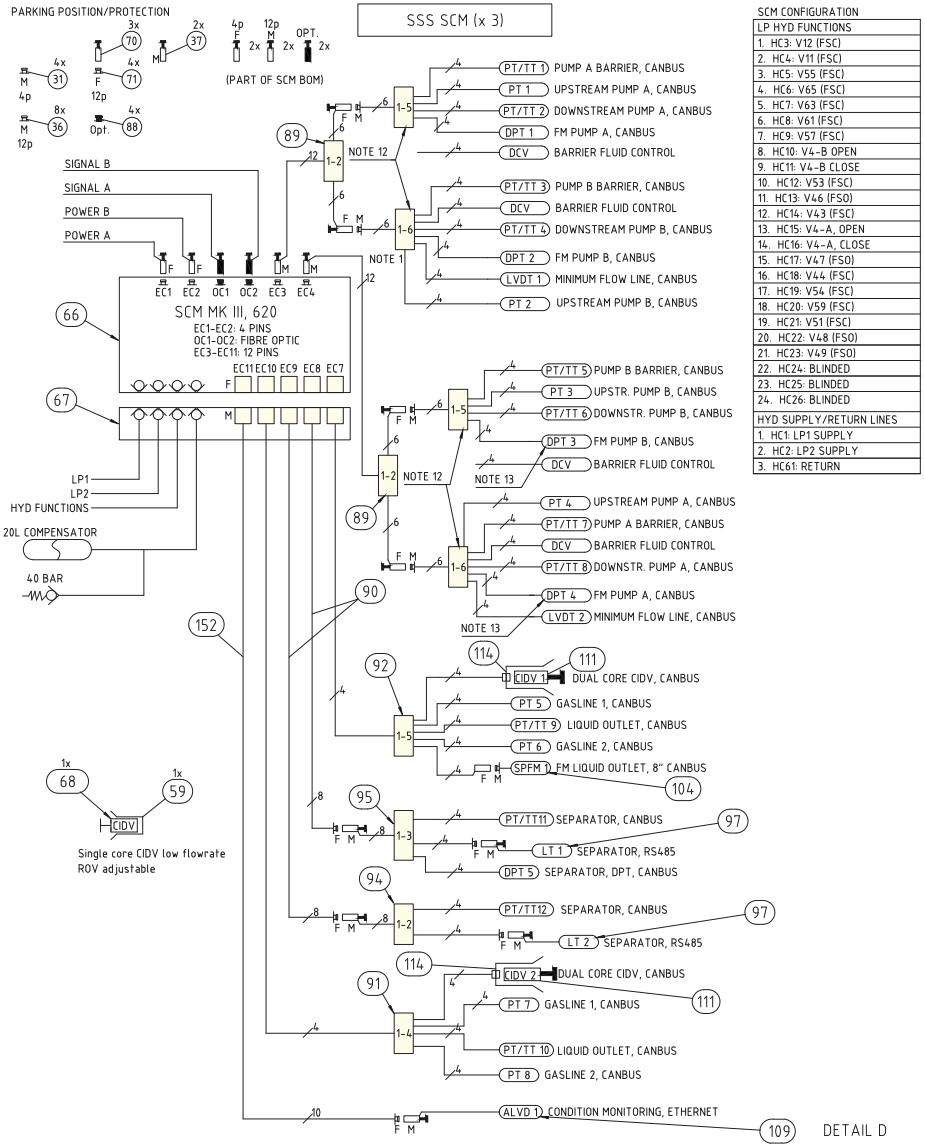

SCM CONFIGURATION

LP HYD FUNCTIONS
1. HC3: V12 (FSC)
2. HC4: V11 (FSC)
3. HC5: V55 (FSC)
4. HC6: V65 (FSC)
5. HC7: V63 (FSC)
6. HC8: V61 (FSC)
7. HC9: V57 (FSC)
8. HC10: V4-B OPEN
9. HC11: V4-B CLOSE
10. HC12: V53 (FSC)
11. HC13: V46 (FSO)
12. HC14: V43 (FSC)
13. HC15: V4-A, OPEN
14. HC16: V4-A, CLOSE
15. HC17: V47 (FSO)
16. HC18: V44 (FSC)
17. HC19: V54 (FSC)
18. HC20: V59 (FSC)
19. HC21: V51 (FSC)
20. HC22: V48 (FSO)
21. HC23: V49 (FSO)
22. HC24: BLINDED
23. HC25: BLINDED
24. HC26: BLINDED
HYD SUPPLY/RETURN LINES
1. HC1: LP1 SUPPLY
2. HC2: LP2 SUPPLY
3. HC61: RETURN

Control Hydraulic Schematic

REFERENCE IS MADE TO
DA600032394/AO-040-SF-400-150001

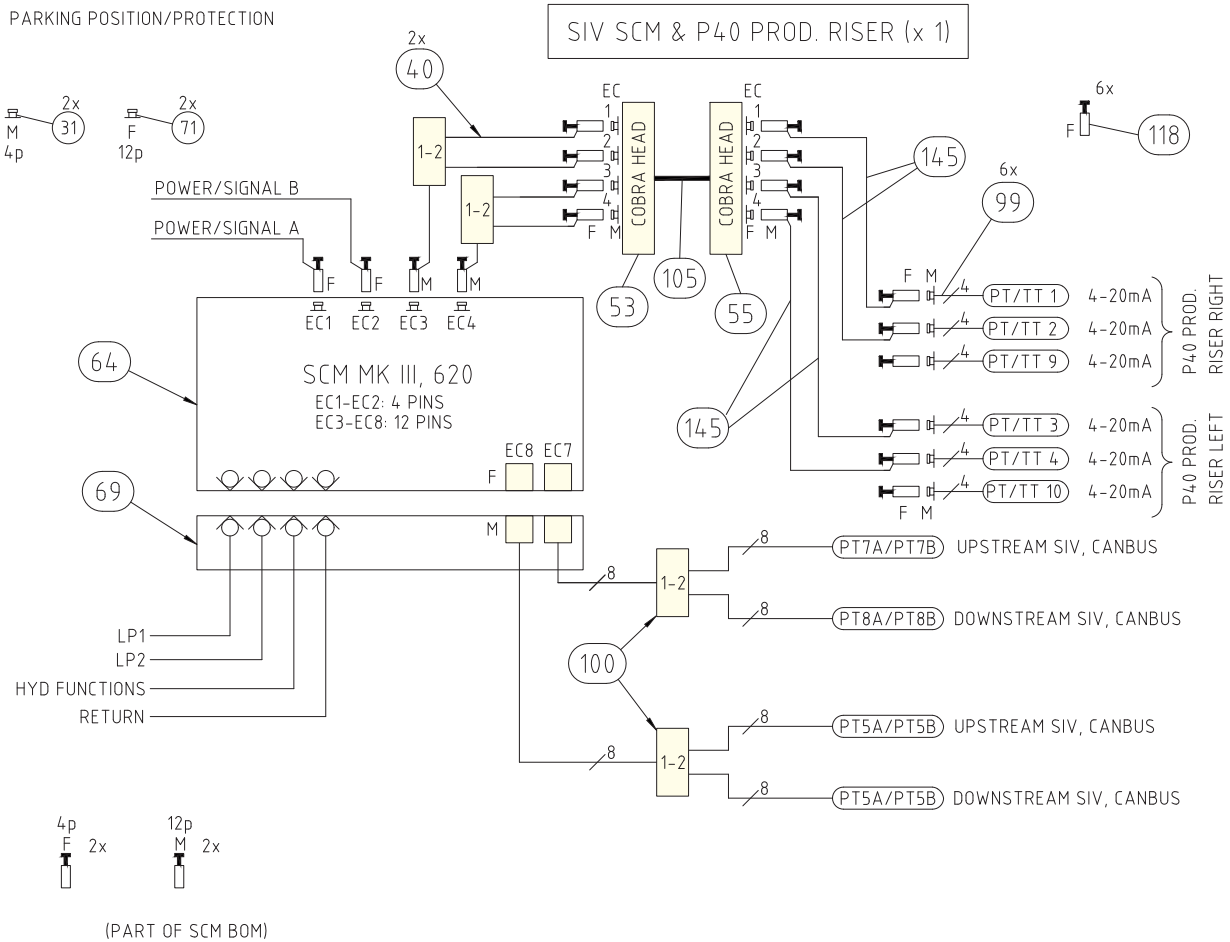

SCM CONFIGURATION

LP HYD FUNCTIONS
1. HC3: N/A (MANIFOLD ONLY)
2. HC4: N/A (MANIFOLD ONLY)
3. HC5: N/A (MANIFOLD ONLY)
4. HC6: N/A (MANIFOLD ONLY)
5. HC7: N/A (MANIFOLD ONLY)
6. HC8: N/A (MANIFOLD ONLY)
7. HC9: N/A (MANIFOLD ONLY)
8. HC10: N/A (MANIFOLD ONLY)
9. HC11: N/A (MANIFOLD ONLY)
10. HC12: N/A (MANIFOLD ONLY)
11. HC13: N/A (MANIFOLD ONLY)
12. HC14: N/A (MANIFOLD ONLY)
13. HC15: N/A (MANIFOLD ONLY)
14. HC16: BLINDED
15. HC17: BLINDED
16. HC18: BLINDED
17. HC19: BLINDED
18. HC20: BLINDED
19. HC21: SIV (CONT. HELD)
20. HC22: BLINDED
21. HC23: BLINDED
22. HC24: BLINDED
23. HC25: BLINDED
24. HC26: BLINDED
HYD SUPPLY/RETURN LINES
1. HC1: LP1 SUPPLY
2. HC2: LP2 SUPPLY
3. HC51: BLINDED
4. HC52: BLINDED
5. HC61: RETURN

DETAIL E

REFERENCE IS MADE TO
DA600032394/AO-040-SF-400-150001

Control Hydraulic Schematic

NO.	DESCRIPTION	QTY.	PN.
1	SCU 200, SPS	4	TYPICAL P6000044483
2	SCU 200, SSS	1	P6000042990
3	SPCU 200E, 1 X 8 LINES POWER/SIGNAL	8	TYPICAL P6000046557
4	SUBSEA PUMP, CONTROL CABINET	3	TYPICAL P6000041871
5	ALVD WS, SDPU-001	1	100025030
6	SCU HPU	1	P6000044482
7	SPCU 200E, 2 X 3 LINES WITH OPTICAL NODES	1	P6000042992
8	MPFM WS, SDPU-001	1	P6000042887
9	ELECTRICAL CONN, 04W SOCKET ROV, SUBSEA PROTECTION	61	P6000045363
10	HPU SYSTEM, 2 LP AND 2 HP	1	P6000043464
11	SERVER, DATA COLLECTION SYSTEM FOR SUBSEA DATA, SDPU-001	1	P6000043388
12	SDPU -SUBSEA DATA PROCESSING UNIT	1	P6000055338
13	MARSHALLING CABINET FOR HPU SCU	1	P6000044480
14	MARSHALLING CABINET FOR SSS SCU	1	P6000051125
15	ACT WITH HOSE AND 04W SOCKET ROV CONN, CH DS	22	P6000052343/P6000056231
16	ACT WITH HOSE AND 04W SOCKET FLOATING FLANGE ROV CONN, UTI/CH DS	39	P6000057384/P6000056235
17	ELECTRICAL CONN, 04W PIN ROV, LOOPED BETWEEN PIN 1-3 AND 2-4, TEST & PARKING	22	P6000011154
18	ELECTRICAL CONN, 04W PIN ROV, FLOATING FLANGE AND 90 DEGREE HOSE FITTING	61	200001554-3
19	ACT WITH HOSE AND 04W PIN FLOATING FLANGE ROV CONN, CH US	61	P6000045102
20	EFL, 1 X 1 LEGS, F/ DISTRIBUTION, 04W SOCKET ROV CONN, UTH - UTH	25	TYPICAL P6000044846
21	EFL, 1 X 2 LEGS, F/ DISTRIBUTION, 04W SOCKET ROV CONN, UTH - UTH	6	TYPICAL P6000044901
22	EFL, 1 X 1 LEGS, F/ DISTRIBUTION, 04W SOCKET & 04W PIN ROV CONN, SCM - CH	2	P6000048359/P6000048360
23	EFL, 1 X 4 LEGS, F/ DISTRIBUTION, 04W SOCKET ROV CONN, UTH - SCM/CH	4	TYPICAL P6000044908
24	EFL, 1 X 5 LEGS, F/ DISTRIBUTION, 04W SOCKET ROV CONN, UTH - SCM/CH	4	TYPICAL P6000044919
25	EFL, 1 X 2 LEGS, F/ DISTRIBUTION, 04W PIN & 04W SOCKET ROV CONN, UTI - SCM	14	P6000044917/P6000044918
26	EFL, 1 X 7 LEGS, F/ DISTRIBUTION, 04W SOCKET ROV CONN, UTH - SCM/CH	2	P6000044900/P6000044916
27	EFL, 1-1 LEGS, F/ DISTRIBUTION, 04W SOCKET ROV CONN, UTH-SCM (CROSS-OVER)	3	TYPICAL P6000044927
28	OFL, 1 X 1 LEGS, F/ DISTRIBUTION, 08W OPTICAL SOCKET ROV CONN, UTH - SCM	6	P6000044923
29	EFL, 1 X 3 LEGS, F/ DISTRIBUTION, 04W SOCKET ROV CONN, UTH - SCM/CH	16	TYPICAL P6000044928
30	ELECTRICAL CONN, 04W PIN ROV, LOOPED BETWEEN PIN 1-2 AND 3-4, PROTECTION	4	P6000065910
31	ELECTRICAL CONN, 04W PIN ROV, PLASTIC PARKING WITH FIXED FLANGE	546	200015548
32	ELECTRICAL CONN, 04W SOCKET ROV, LOOPED BETWEEN PIN 1-3 AND 2-4, PROTECTION	243	P6000052641
34	ACT WITH HOSE AND 04W PIN FLOATING FLANGE ROV CONN, UTHP	190	P6000057340
35	ELECTRICAL CONN, 04W SOCKET ROV WITH FIXED FLANGE, PARKING	2	200017689
36	ELECTRICAL CONN, 12W PIN ROV WITH FIXED FLANGE, PLASTIC PARKING	24	200018152
37	ELECTRICAL CONN, 04W PIN ROV, PROTECTION	36	200015708
38	ELECTRICAL CONN, 04W SOCKET ROV, WITH FLOATING FLANGE AND 90 DEGREE HOSE FITTING	35	P6000031106
39	HFL, 13-LINE, MQC-13 MKII BOTH ENDS, MAN/UDM/UTP/UCM - PXT	24+3	P6000045067/P6000045068
40	EFL, 1 X 2 LEGS, F/ DISTRIBUTION, 12W PIN & 04W SOCKET ROV CONN, SCM - CH SIV UPSTREAM	2	P6000044905
41	HFL, 5-LINE, MQC-13 MKII BOTH ENDS, UTI - IXT	13+3	P6000045069/P6000060419
42	MQC-13 (MKII), INBOARD PLATE, 13 LINES, W/O POPPETS ON METHANOL LINES, PXT	25	P6000044813
43	MQC-13 (MKII), OUTBOARD SEAL CAP, F/ 13 LINES, MAN/UDM/UTP/UCM	34	P6000044814
44	MQC-13 (MKII), OUTBOARD LTP PLASTIC	49	100017910
45	MQC-13 (MKII), INBOARD PLATE, F/5 LINES	66	100017910 + COUPLERS 100029234
46	MQC-13 (MKII), OUTBOARD SEAL CAP, F/ 5 LINES, MAN/UDM/UTP/UCM	42	P6000044817
47	MQC-13 (MKII), INBOARD PLATE, F/ 6 LINES, WOCS	24	P6000044818
48	MQC-13 (MKII), OUTBOARD LOGIC CAP, F/ 6 LINES, IXT	24	P6000055259
49	MQC-13 (MKII), INBOARD PARKING, F/ 5 LINES	42	P6000049872
50	MQC-13 (MKII), INBOARD PARKING, F/ 13 LINES, PROD SYSTEM	32	P6000044821
51	COBRA-HEAD MECH ASSY, UPSTREAM	59	P6000055392
52	COBRA-HEAD MECH ASSY, DOWNSTREAM	11	P6000055393
53	COBRA-HEAD MECH ASSY, UPSTREAM - SIV	1	P6000055394
54	COBRA-HEAD MECH ASSY, DOWNSTREAM - SIV END	1	P6000055395
55	COBRA-HEAD MECH ASSY, DOWNSTREAM - P40 END	1	P6000055396
56	MQC-13 (MKII), INBOARD PLATE, F/ 8 LINES, SSS	6	100001135+COUPLERS, P6000020418 AND 100041148
57	ELECTRICAL CONN, 04W PIN ROV, LOOPED BETWEEN PIN 1-3 AND 2-4, PROTECTION	16	P6000062750
58	MQC-13 (MKII), INBOARD PLATE, 13 LINES, MAN/UDM/UTP/UCM	34	100001135+COUPLERS P6000016555
59	CIDV RECEPTACLE, SINGLE CORE, LOW FLOW HORIZONTAL DOCKING, SSS MAN	3	P6000058902
60	SCM MK III, 620, PROD XT, SPS	25+1	P6000042968
61	SCMMB MKIII, PROD XT, SPS	25	P6000048955
62	SCM MK III, 620, IXT, SPS	24+1	P6000042969
63	SCMMB MKIII, IXT, SPS	24	P6000048955
64	SCM MK III, 620, MAN/SIV, SPS	4+1	P6000042970
65	SCMMB MKIII, MAN, SPS	3	P6000048955
66	SCM MK III, 620, MAN, SSS	3+1	P6000043122
67	SCMMB MKIII, MAN, SSS	3	P6000042975
68	CIDV, SINGLE CORE, LOW FLOW ROV, SSS MANIFOLD	3	P6000044443
69	SCMMB MKIII, SIV, SPS	1	P6000042972
70	ELECTRICAL CONN, 12W PIN ROV, PROTECTION	131	200017136
71	ELECTRICAL CONN, 12W SOCKET ROV, PARKING WITH FIXED FLANGE	112	200017702
72	EFL, 1 X 4 LEGS, F/ DISTRIBUTION, 12W PIN ROV FOR SCM EC3, 04W SOCKET ROV FOR DHPT/ASD/MPFM1, 04W SOCKET PADDLE ROV W/V-NOTCH FOR LVDT, PXT	25	P6000044718
73	MQC-13 (MKII), INBOARD PLATE, F/ 7 LINES, SSS	6	100001135+COUPLERS P6000020418 AND 100041148
74	EFL, 1 X 1 LEGS, F/DISTRIBUTION, 12W PIN ROV FOR SCM EC4, 04W SOCKET ROV FOR MPFM 2, PXT	25	P6000044720
75	SENSOR HARNESS, 1 X 5 LEGS, 12W PIN STP FOR SCM EC7, 04W SOCKET STP FOR CIDV RECEPTACLE, 2xPT/TT, 2xPT, PXT	25	P6000044715

NO.	DESCRIPTION	QTY.	PN.
76	EFL, 1 X 1 LEGS, F/ DISTRIBUTION, UTH - SCM	10	TYPICAL P6000044926
77	SENSOR HARNESS, 1 X 2 LEGS, 12W PIN ROV FOR SCM EC3/EC4, 04W SOCKET DVR FOR DPT, PT/TT, IXT	48	P6000058336
78	EFL, 1 X 2 LEGS, F/ DISTRIBUTION, 12W PIN ROV FOR SCM EC5, 04W SOCKET ROV FOR DHPT, 04W SOCKET PADDLE ROV W/V-NOTCH FOR LVDT, IXT	24	P6000044851
79	SENSOR HARNESS, 1 X 3 LEGS, 12W PIN STP FOR SCM EC7, 2xPT/TT, PT, IXT	24	P6000044721
80	SENSOR HARNESS, 1 X 4 LEGS, 12W PIN STP FOR SCM EC8, 2xPT/TT, 2xPT, IXT	24	P6000044722
81	SENSOR HARNESS, 1 X 3 LEGS, 12W PIN STP FOR SCM EC7/EC8, 04W SOCKET ROV FOR DPT, 2xPT/TT, MAN	6	P6000044940
82	SENSOR HARNESS, 1 X 5 LEGS, 12W PIN STP FOR SCM EC8, 3xPT/TT, 2xPT, PXT	25	P6000044719
83	SENSOR HARNESS, 1 X 1 LEGS, 04W PIN ROV W/FLOATING FLANGE FOR EC, ROV ASD, PXT	25	P6000046447
84	MPFM, RS485, ROXAR, PXT	25	P6000042048
85	CIDV, DUAL CORE, SKOFLO, VERTICAL DOCKING, PXT	25+2	P6000044445
86	SENSOR HARNESS, 1 X 1 LEGS, 04W PIN ROV FOR EC, ROV APD, MAN	6	P6000046449
87	OPTICAL CONN, HYDRALIGHT, 08W, SOCKET ROV, PROTECTION	6	200017831
88	OPTICAL CONN, HYDRALIGHT, 08W PIN ROV, PARKING WITH FIXED FLANGE	12	200015522
89	EFL, 1 X 2 LEGS, F/ DISTRIBUTION, 12W PIN & ROV 12W SOCKET ROV CONN, SCM EC3/EC4 - PUMP, SSS	6	P6000044942
90	EFL, 1 X 1 LEGS, F/ DISTRIBUTION, 12W PIN STP CONN & 12W SOCKET ROV CONN, SCM EC8/EC9 - SEPARATOR, SSS	6	P6000044967
91	SENSOR HARNESS, 1 X 4 LEGS, 12W PIN STP FOR SCM EC10, 04W SOCKET STP W/SPLIT FOR CIDV RECEPTACLE, 3xPT/TT, SSS	3	P6000044944
92	SENSOR HARNESS, 1 X 5 LEGS, 12W PIN STP FOR SCM EC7, 04W SOCKET STP W/SPLIT FOR CIDV RECEPTACLE, 04W SOCKET DVR FOR SPFM1, 3xPT/TT, SSS	3	P6000044945
93	MQC-13 (MKII), OUTBOARD TEST PLATE, F/ 13 LINES, W/O POPPETS FOR METHANOL LINES, PXT	4	P6000042983
94	SENSOR HARNESS, 1 X 2 LEGS, 12W PIN ROV FOR EC9, 04W SOCKET ROV W/FLOATING FLANGE TO LT2, PT/TT, SSS	4	P6000044946
95	SENSOR HARNESS, 1 X 3 LEGS, 12W PIN ROV FOR EC8, 04W SOCKET ROV W/FLOATING FLANGE TO LT1, PT/TT, DPT, SSS	3	P6000044947
96	SENSOR HARNESS, 2 X 2 LEGS, 04W PIN DVR TO EC3 & EC4, V-CONE, DUAL DPT, IXT	24	P6000058338
97	SENSOR HARNESS, 1 X 1 LEGS, 04W PIN ROV FOR EC, ROV LT, SSS	6	P6000042368
98	EFL, 1 X 1 LEGS, F/ DISTRIBUTION, UTHP - CH	2	TYPICAL P6000044986
99	SENSOR HARNESS, 1 X 1 LEGS, 04W PIN ROV W/FLOATING FLANGE CONN, PT/TT, SPS	6	TYPICAL P6000044848
100	SENSOR HARNESS, 1 X 2 LEGS, 12W PIN STP W/FLOATING FLANGE FOR EC7/EC8, 2xPT/TT, SPS	2	P6000044852
101	V-CONE FLOWMETER W/DUAL DPT, SSS	6	P6000042953
102	MQC-13 (MKII), LOGIC CAP, W/CIDV ROV ADJ. VALVE, PXT	25+1	P6000044822
103	MQC-13 (MKII), INBOARD PLATE, 8 LINES, PXT	25	P6000044823
104	FLOWMETER, SPFM, WI, CANOPEN, SIGURD SORUM, SINGLE DPT (SSS)	3	P6000043394
105	P40 RISER ELECTRICAL CABLE INCLUDING CH ASSY	1	P6000056902
106	EFL, 1 X 1 LEGS, F/ DISTRIBUTION, 04W PIN ROV W/FLOATING FLANGE FOR EC9, DRY MATE CONN FOR DHPT, PXT/IXT	49	P6000044716
107	ACT WITH HOSE AND 8W PIN ROV FIBRE OPTIC CONN, UTH, SSS	6	P6000048354
109	LEAK DETECTOR, ACOUSTIC, ETHERNET, ALVD	3	P6000044757
110	OPTICAL JUMPER, 1 X 2 LEGS, F/ DISTRIBUTION, UTH - SCM, SPARE, SSU-JUMPER	6	P6000044925
111	CIDV, DUAL CORE, LOW/MEDIUM FLOW, HORIZONTAL DOCKING, SSS	6+1	P6000044442
112	CIDV, SINGLE CORE, MEDIUM FLOW, HORIZONTAL DOCKING, SPS	6+1	P6000044444
113	RECEPTACLE FOR SINGLE CORE CIDV, HORIZONTAL DOCKING, SPS	6	P6000058906
114	RECEPTACLE FOR DUAL CORE CIDV, HORIZONTAL DOCKING, SSS	6	P6000058905
115	RECEPTACLE FOR DUAL CORE CIDV, VERTICAL DOCKING, PXT	25	P6000044417
116	CLAMP FOR ASD	25	P6000048153
117	CLAMP FOR APD	6	P6000048339
118	ELECTRICAL CONN, 04W SOCKET ROV, LANYARD IN 30 DEGREE ORIENTATION, DRAG ONLY, DWARF PROTECTION, SPS	6	P6000063068
119	TEST & FLUSHING HPU - TFHPU, EX RATED	4	P6000045329
120	TEST & FLUSHING HPU - TFHPU, FOR NON HAZARDOUS ENV.	4	P6000043468
121	SENSOR SIMULATOR, SPS	8	P6000043050
122	TRANSPORTATION SKID, FOR MRT/SCM MK III	5	100028733
123	SCM MK III, TEST STAND, PAZFLOR	5	P6000042979
124	SCMMB MK III, TEST & FLUSHING PLATE	2	P6000042980
125	SMART TOOL 200, LAPTOP INCL. LICENSE AND TRANSPORTATION BOX	2	P6000051561
126	SPCTU 200, E, 620 VAC	8	P6000046536
127	SENSOR SIMULATOR, SSS	2	P6000043049
128	MQC-13 (MKII), OUTBOARD, 13 LINES, TEST AND FLUSHING PLATE	10	100009271
129	EFL, 1 X 1 LEGS, F/ DISTRIBUTION, ELECTRICAL TEST CABLES, 10 m/100m	2+2	P6000045048/P6000045049
130	OFL, 1 X 1 LEGS, F/ DISTRIBUTION, OPTICAL TEST CABLE, 08W SOCKET ROV, SSS	2	P6000038341
131	ELECTRICAL TEST CONNECTORS WITH PIG-TAIL	52	VARIOUS
132	SWIMS SUBSEA EQUIPMENT	2	P6000042644
133	SWIMS TOPSIDE EQUIPMENT	1	P6000042645
134	SWIMS TEST TOOL SET	1	P6000044835
135	SCM DUMMY, MK III	2	P6000042981
136	PSEMS 200, SPS	1	P6000042995
137	PSEMS 200 W/FIBER, SSS (NOT SOS)		P6000052864
138	TEM SIMULATOR 200 (ETU)	8	P6000036581
139	MPFM SIMULATOR, RS485, ROXAR, SPS	1	P6000042889
140	MQC-13 (MKII), INBOARD, 13 LINES, TEST AND FLUSHING PLATE	6	100009270
143	SENSOR HARNESS, 1 X 1 LEGS, 04W PIN DVR to SWIMS, 04W SOCKET ROV FOR DHPT, SWIMS	2	P6000042643
145	EFL, 1X1 LEGS, F/ DISTRIBUTION, 04W PIN ROV FOR CH, 04W SOCKET ROV FOR PRODUCTION RISER, SPS	4	TYPICAL P6000052340
146	OPTICAL CONN, HYDRALIGHT, 08W SOCKET ROV, LOOP-BACK CH 1-5, 2-6, 3-7, 4-8, PROTECTION, SSS	6	P6000018831
147	SSPS WS W/SMART TOOL, SDPU-001	1	P6000059561
149	SSPS WS DESKTOP, CCR	1	P6000059562
150	HFL, MQC-13 MKII BOTH ENDS, 8-LINE, 24 M, MAN - UTH, SSS	3	P6000048758
151	HFL, MQC-13 MKII BOTH ENDS, 7-LINE, 23 M, MAN - INLET MODULE, SSS	3	P6000048759
152	EFL, 1 X 1 LEGS, F/ DISTRIBUTION, 12W PIN STP FOR SCM EC11, 12W SOCKET ROV TO ALVD, SSS	3	P6000048365
153	MPFM WS DESKTOP, CCR	1	P6000060228
154	MQC-13 (MKII), OUTBOARD SEAL CAP, F/ 8 LINES, SSS	6	P6000053184
155	MQC-13 (MKII), OUTBOARD SEAL CAP, F/7 LINES, SSS	6	P6000053183
156	MQC-13 (MKII), INBOARD PARKING, 8 LINES, SSS	6	100001135+COUPLERS 7105050
157	MQC-13 (MKII), INBOARD PARKING, 7 LINES SSS	3	100001135+COUPLERS 7105050

REFERENCE IS MADE TO
DA600032394/AO-040-SF-400-150001

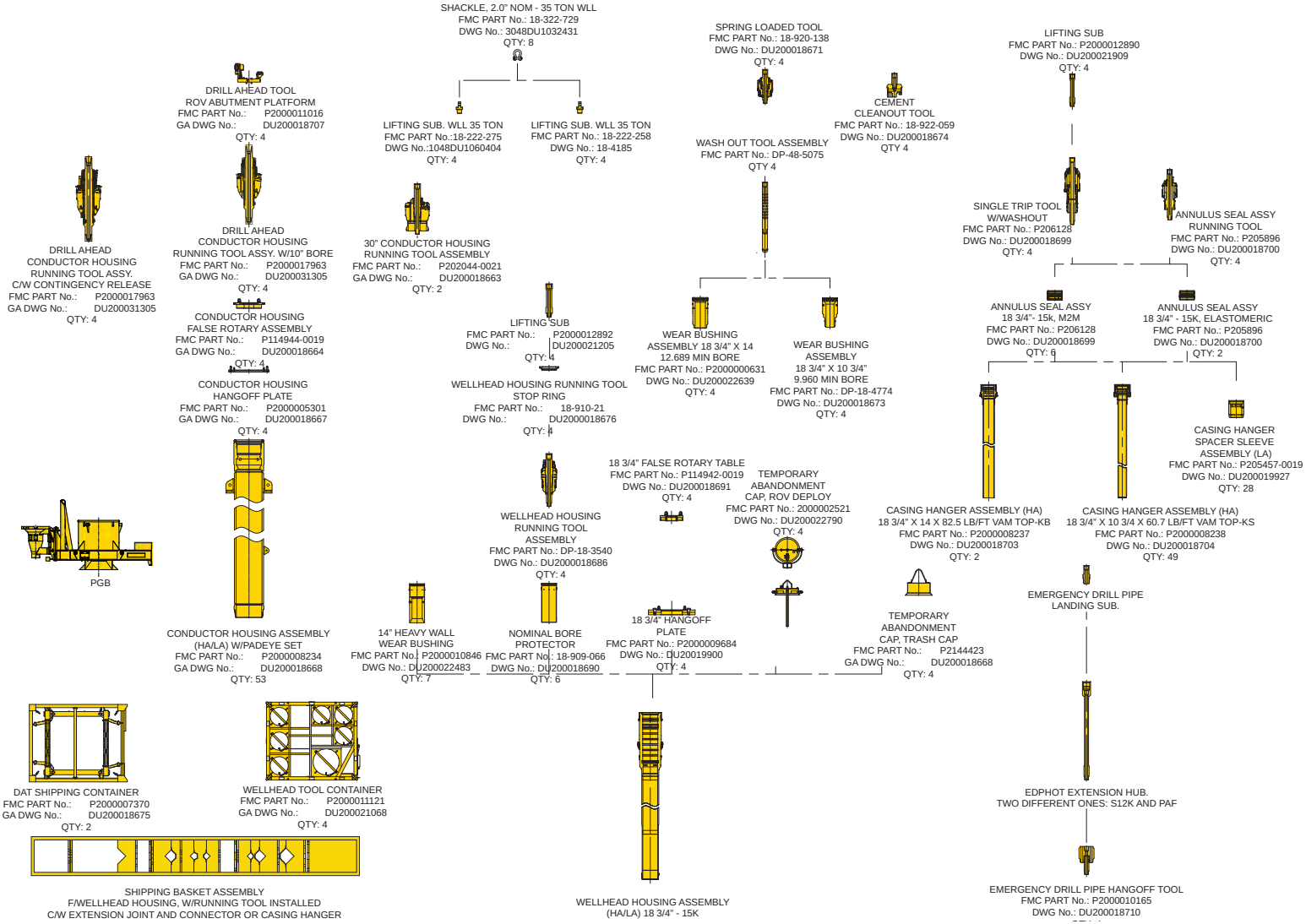

5.1 Wellhead Scope of Supply

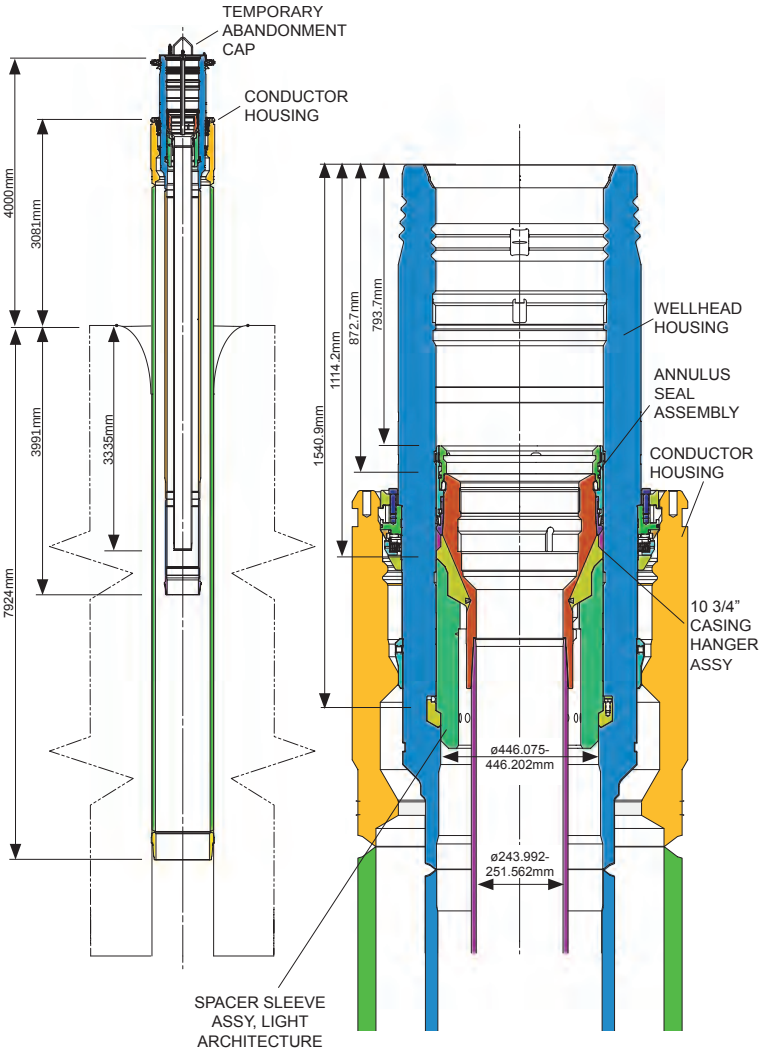

NOTE: HEAVY ARCHITECTURE WITH 14" CASING HANGER

5.2 Wellhead and Conductor Housing

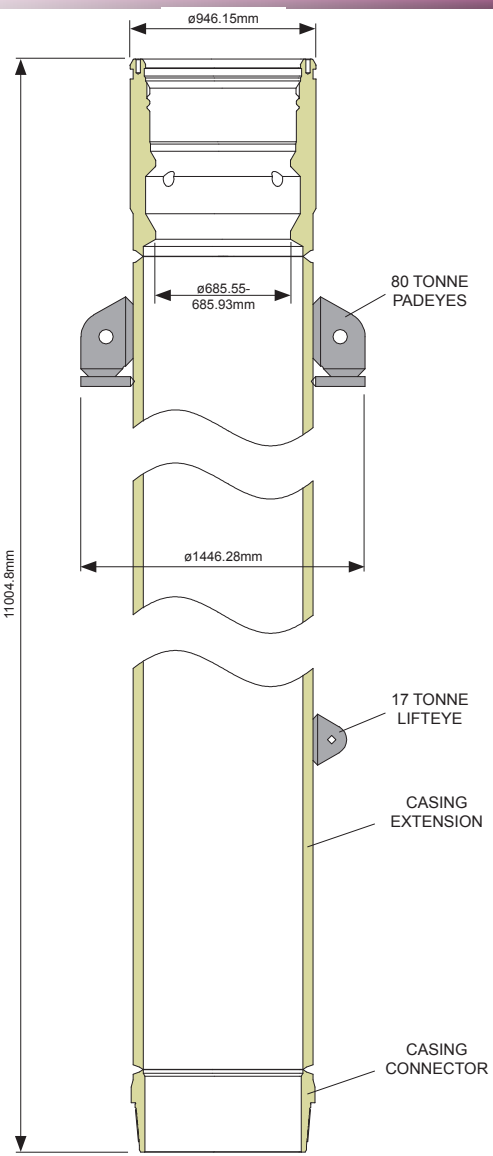

5.3 Conductor Housing

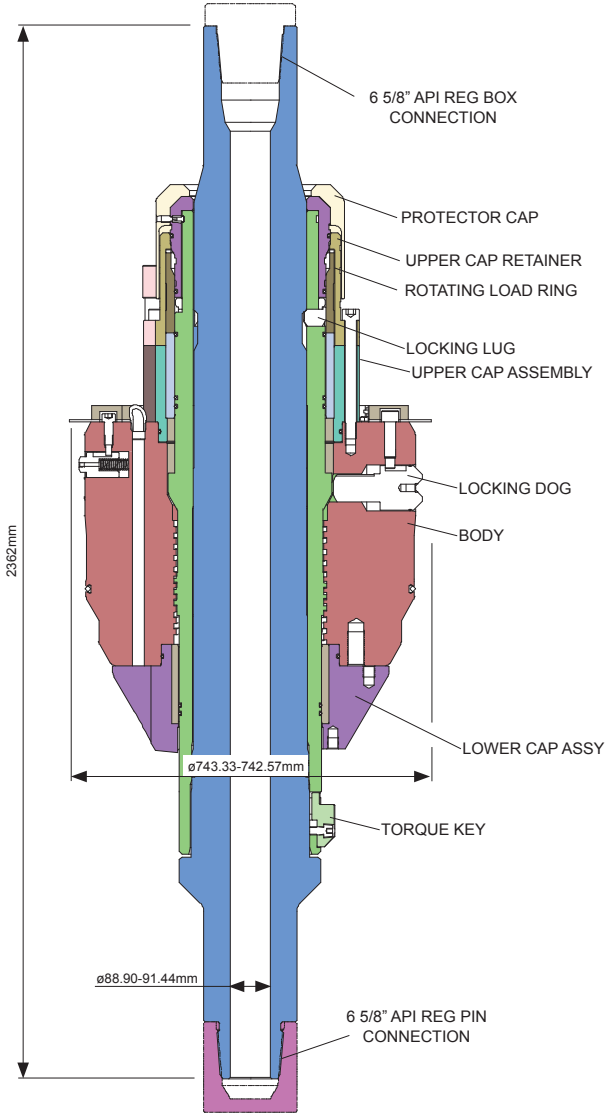

5.4 Drill Ahead Conductor Housing RT Assy w/10" bore Inner Sleeve

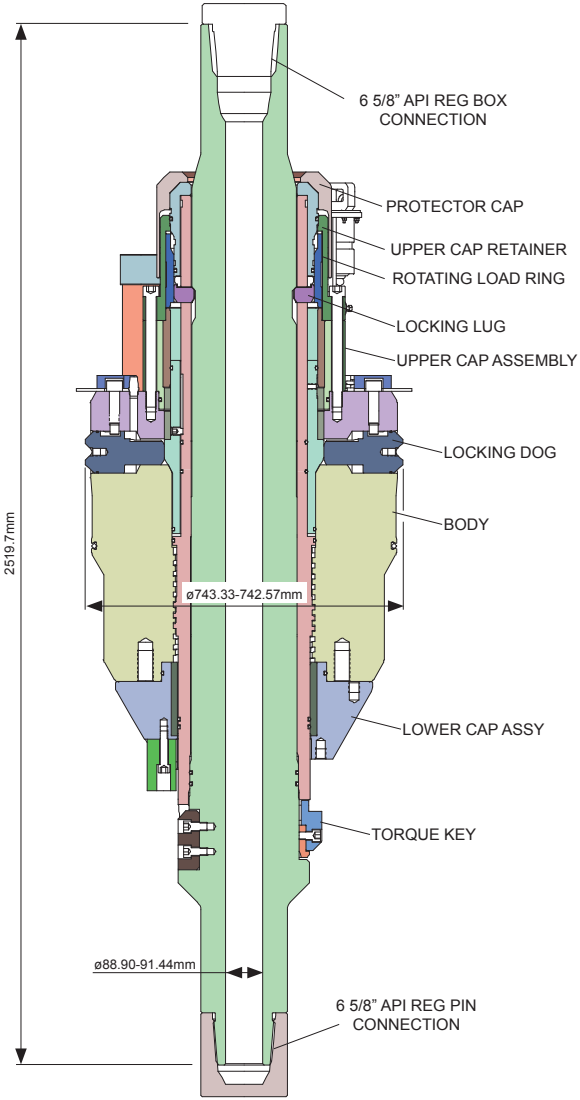

5.5 Drill Ahead Conductor Housing Running Tool Assy

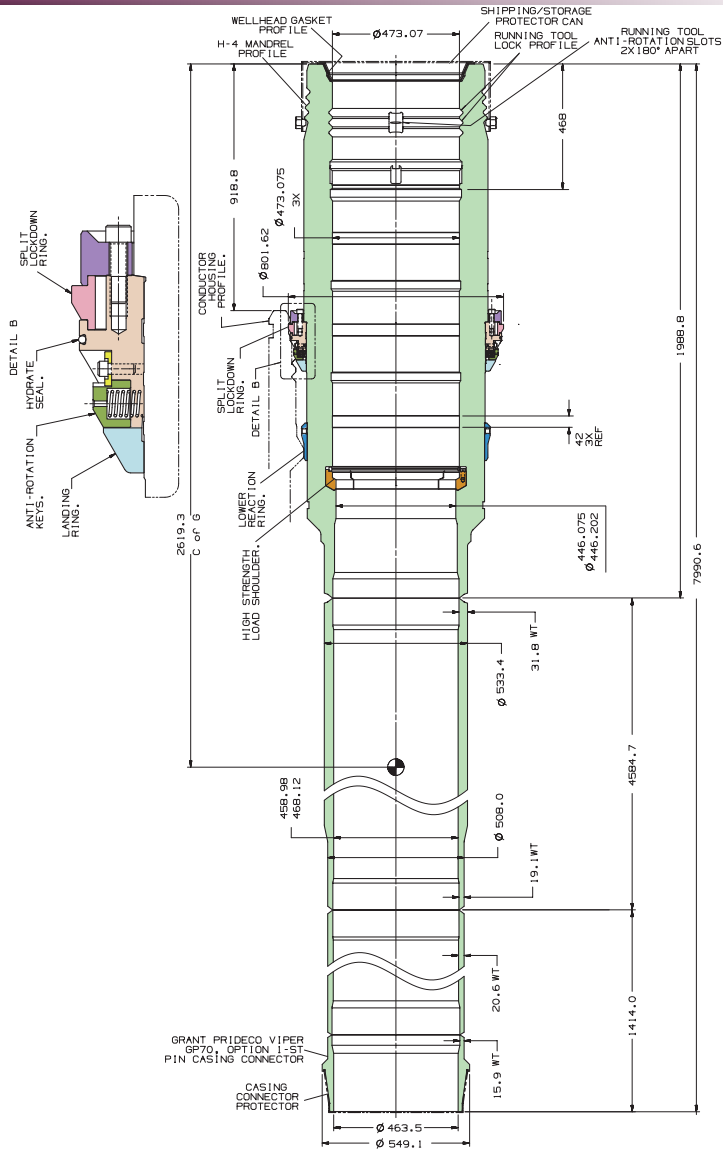

5.6 Wellhead Housing

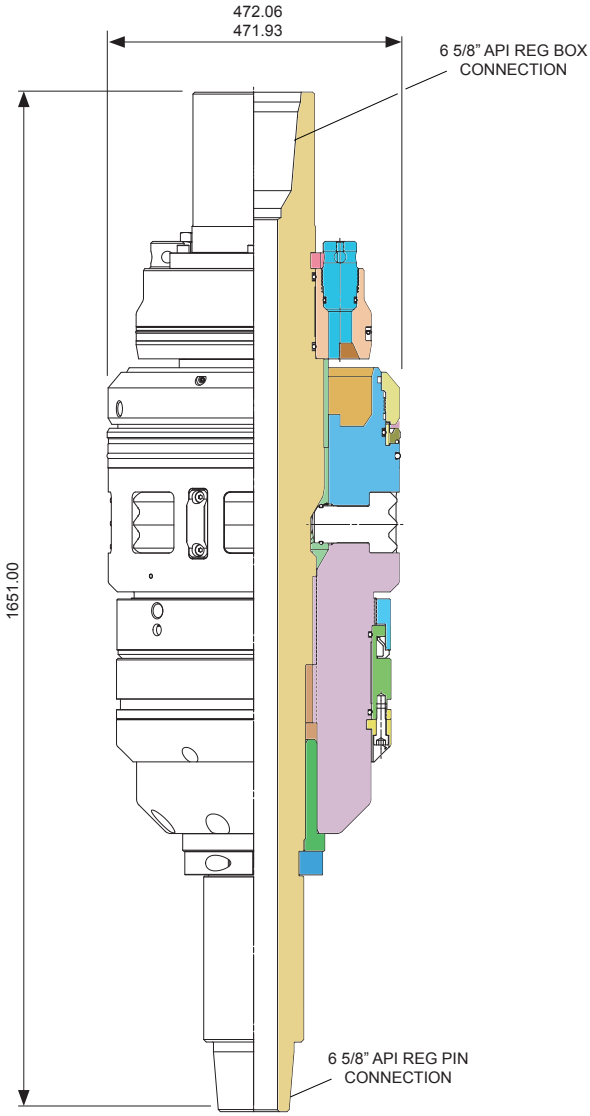

5.7 Wellhead Housing Running Tool

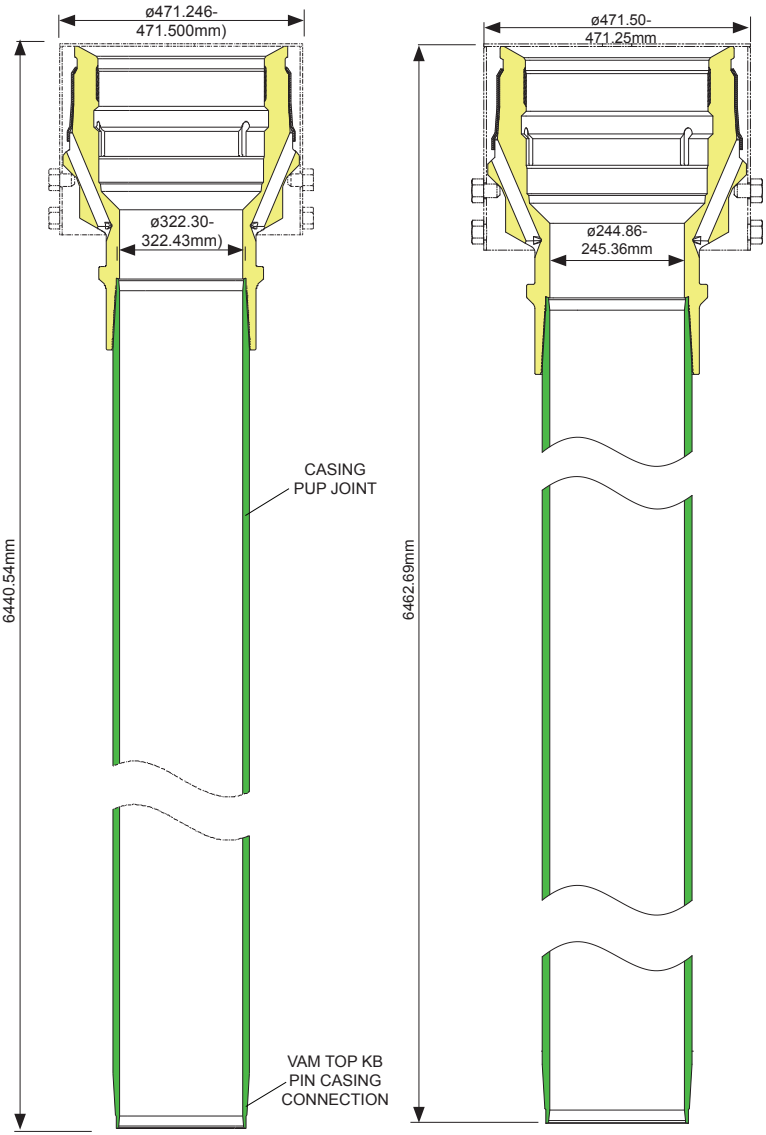

5.8 Casing Hanger 14” and 10 3/4”

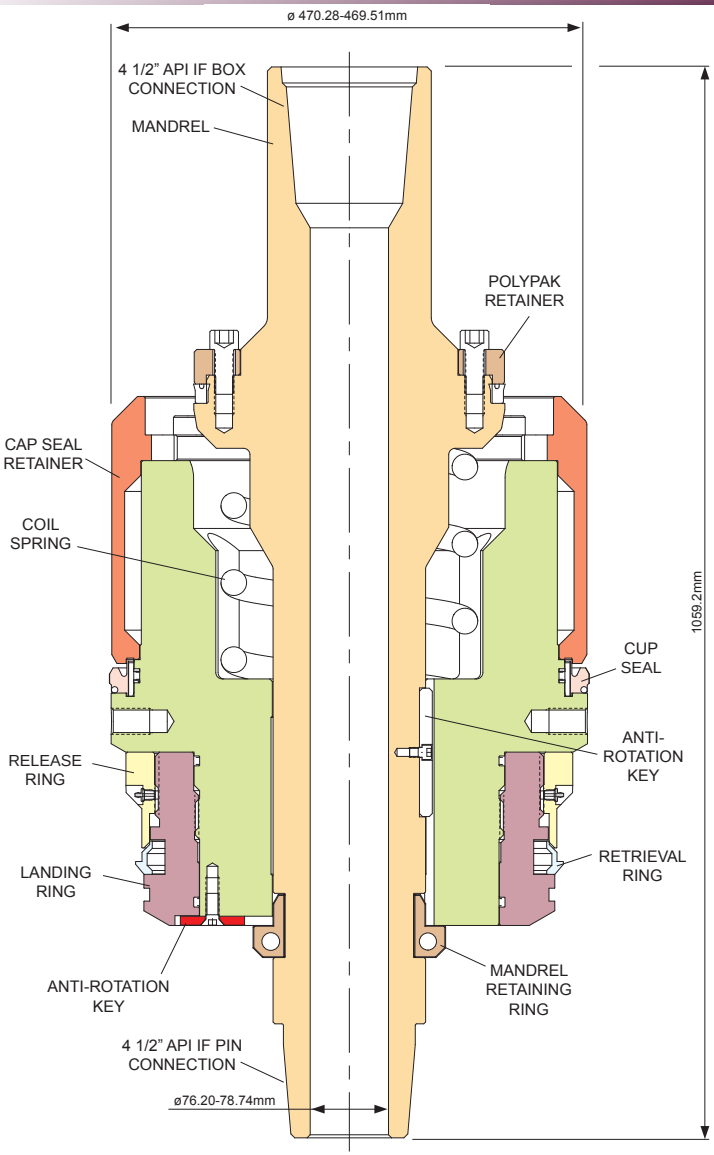

5.9 Spring Loaded Tool

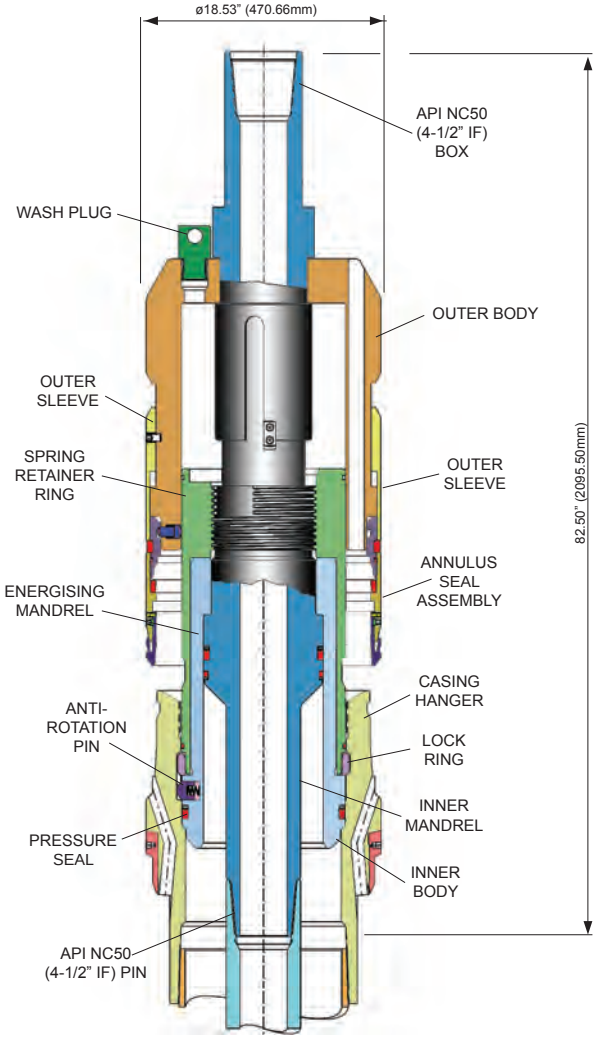

5.10 Single Trip Tool

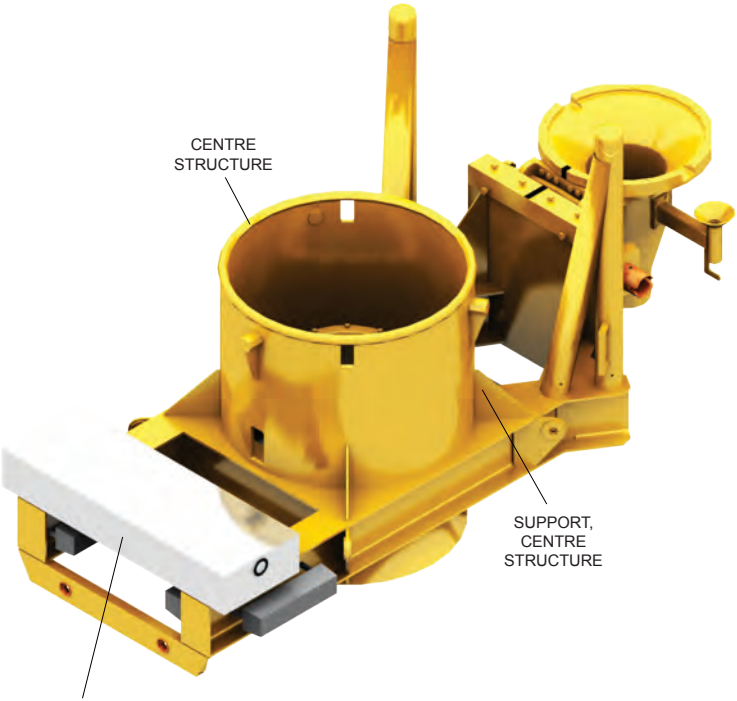

NOTE: TEMPORARY USE FOR ALIGNMENT
OF CONDUCTOR HOUSING

5.11 PGB

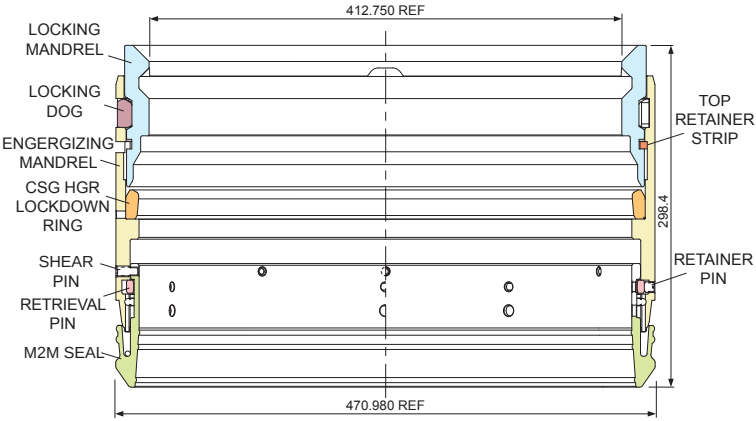

5.12 Metal to Metal (M2M) Seal

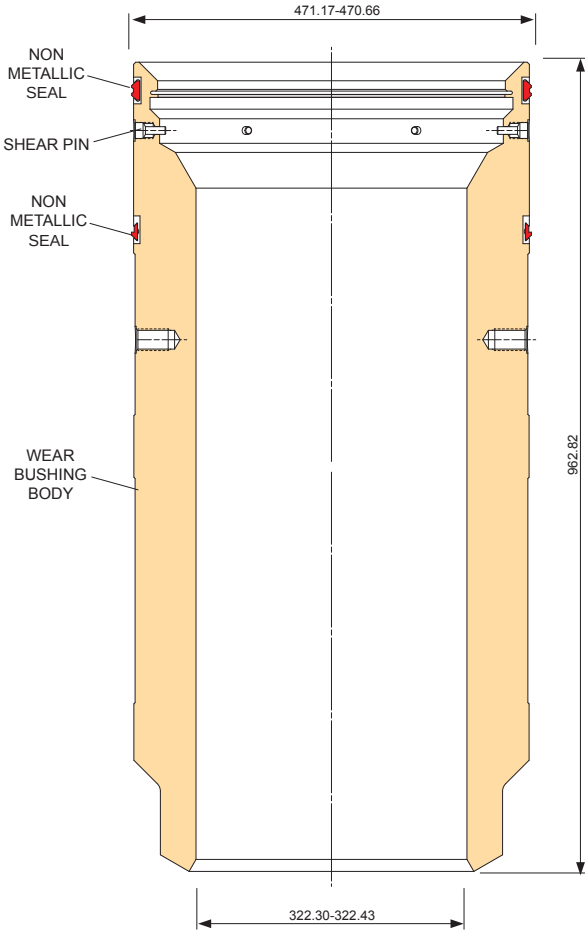

5.13 14” Wear Bushing

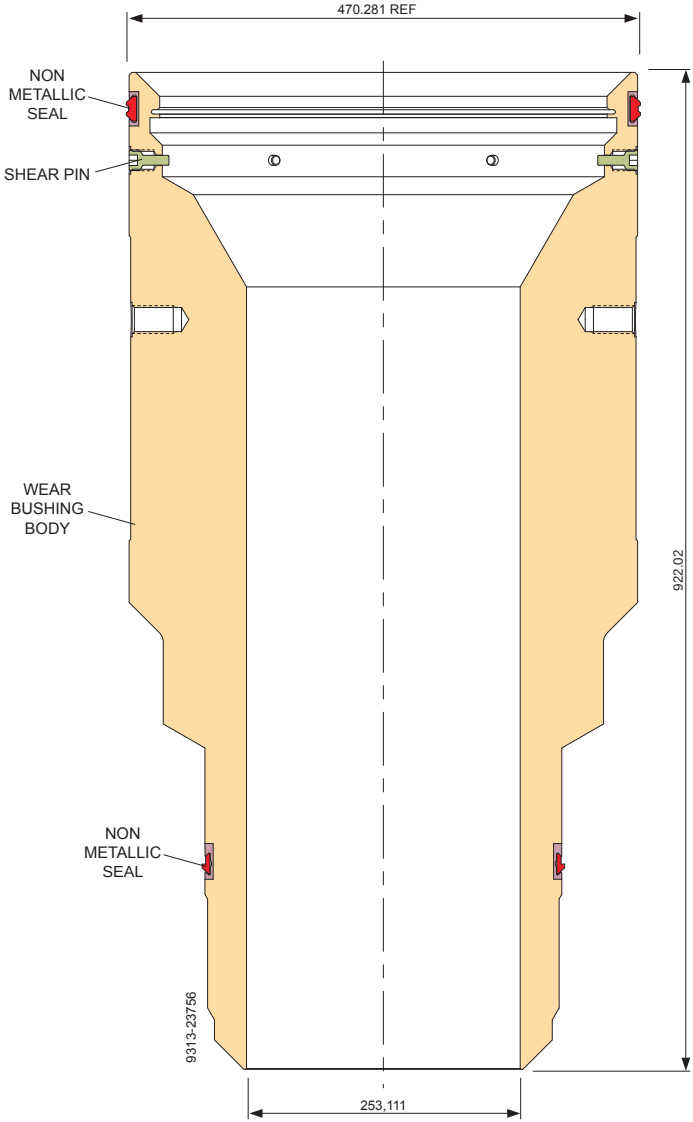

5.14 10 3/4” Wear Bushing

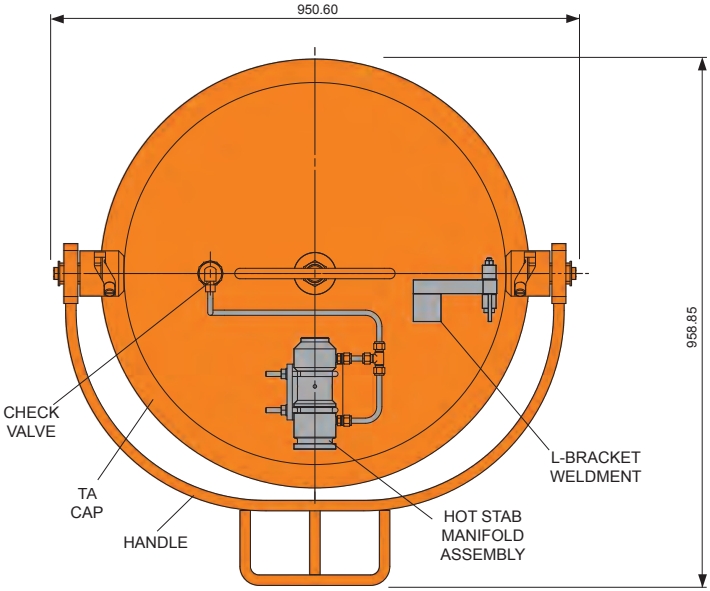
950.60
958.85
CHECK
VALVE
TA
CAP
HANDLE
L-BRACKET
WELDMENT
HOT STAB
MANIFOLD
ASSEMBLY

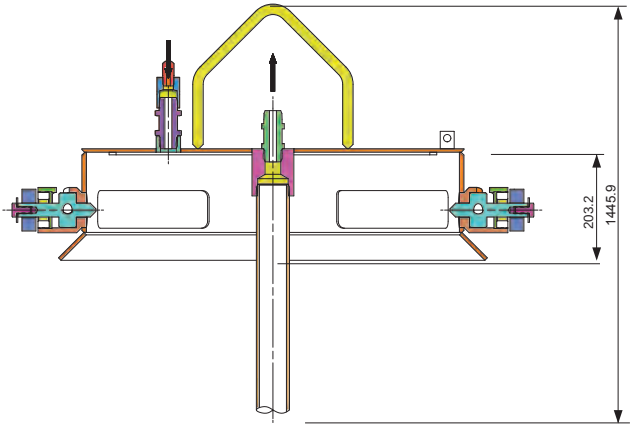
203.2
1445.9

5.15 TA Cap

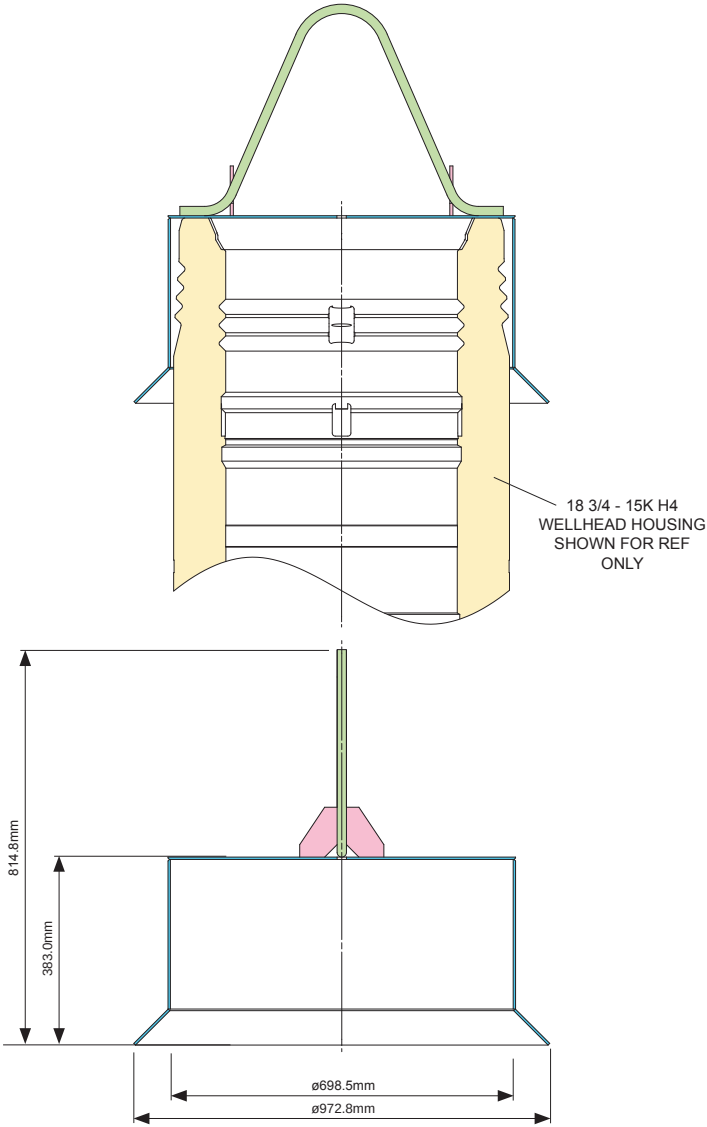

5.16 Trash Cap

6 Xmas Tree System

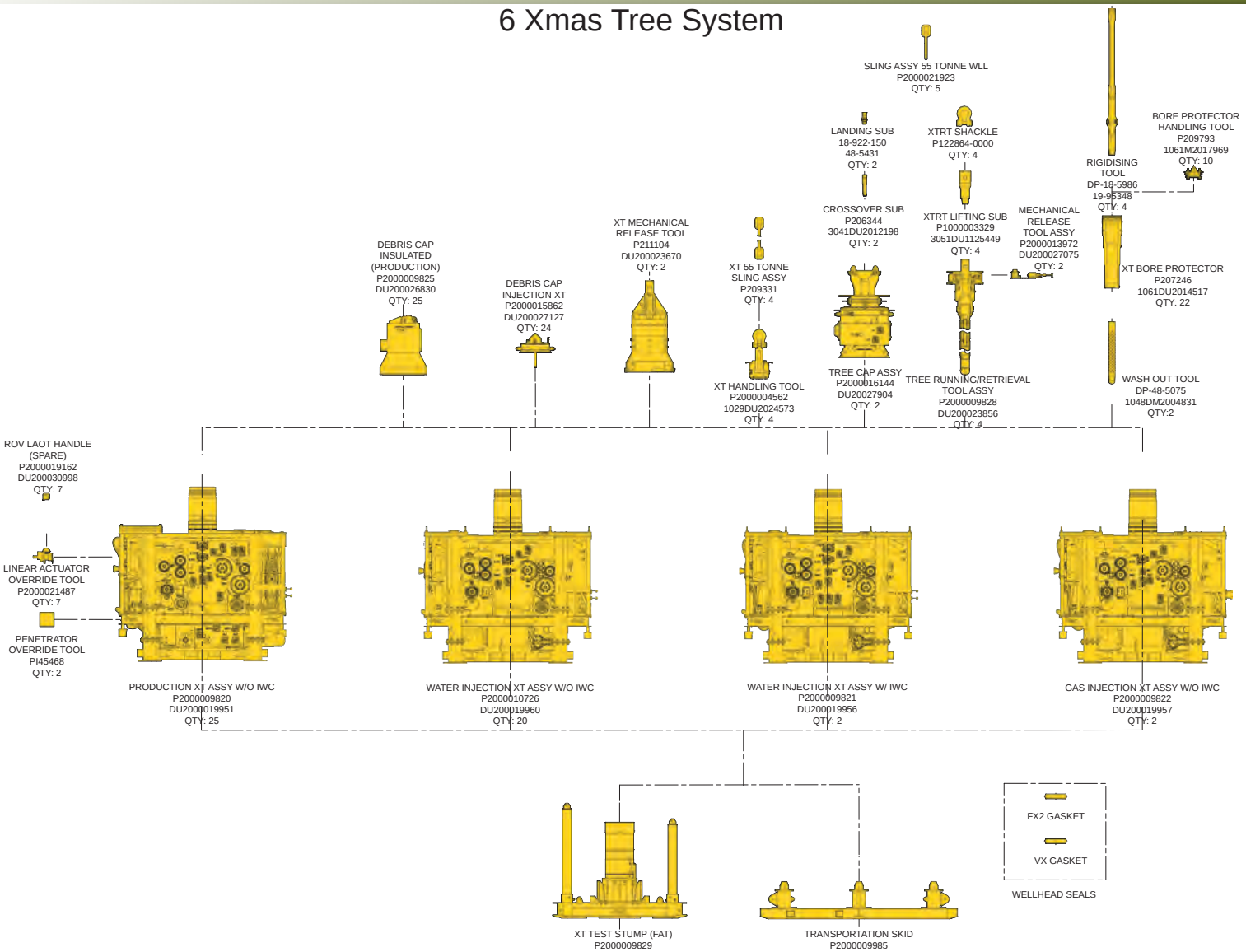

6.1 XT System, Scope of Supply

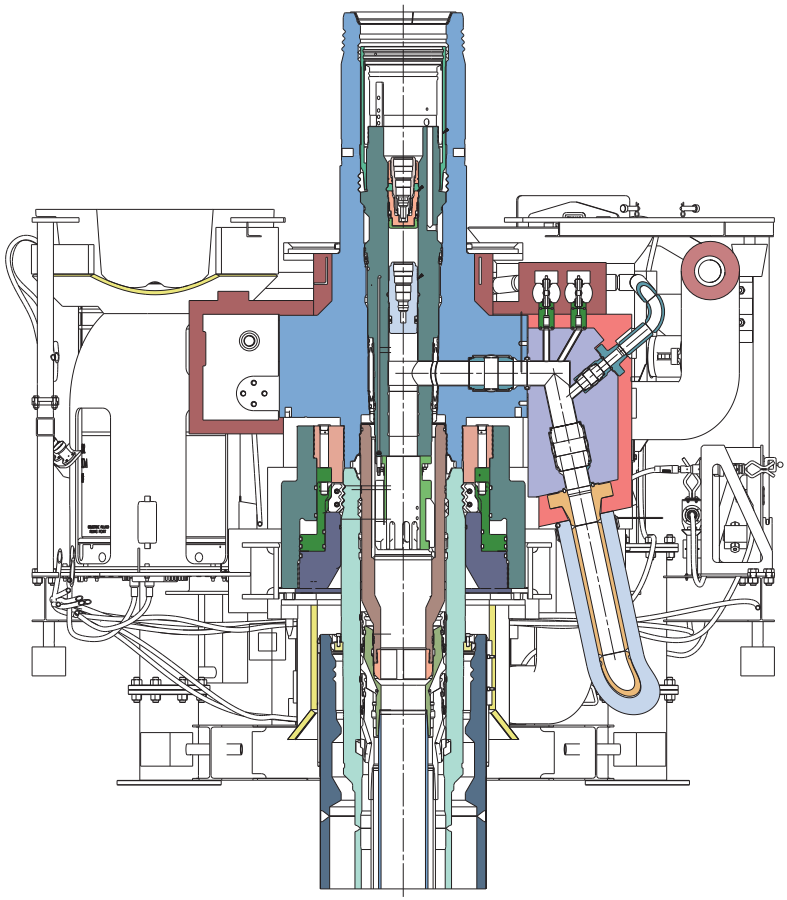

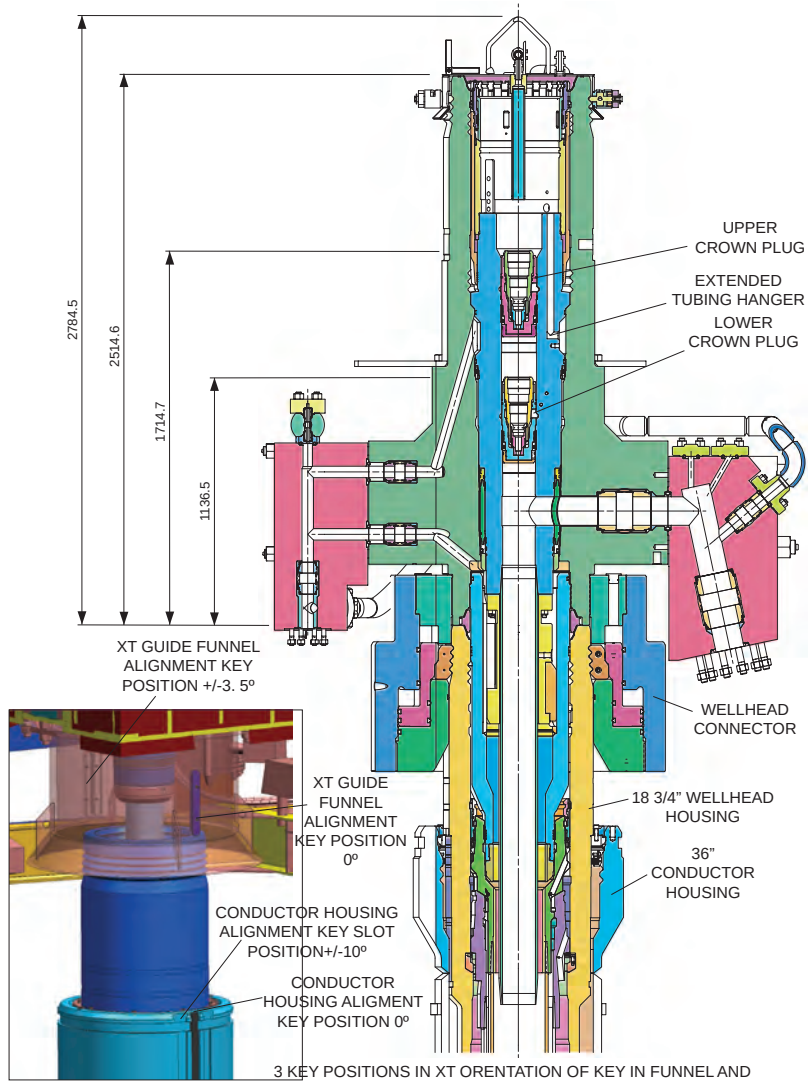

SETUP FOR CORRECT XT ORIENTATION TO WH

3 KEY POSITIONS IN XT ORENTATION OF KEY IN FUNNEL AND 3 KEY SLOT POSITIONS ON CONDUCTOR HOUSING. REFER TO MATRIX IN XT ICP TO DETERMINE LOCATION OF KEY IN XT FUNNEL AND TARGET KEY SLOT IN CONDUCTOR HOUSING.

6.2 Conductor/Wellhead/XT Stack-up

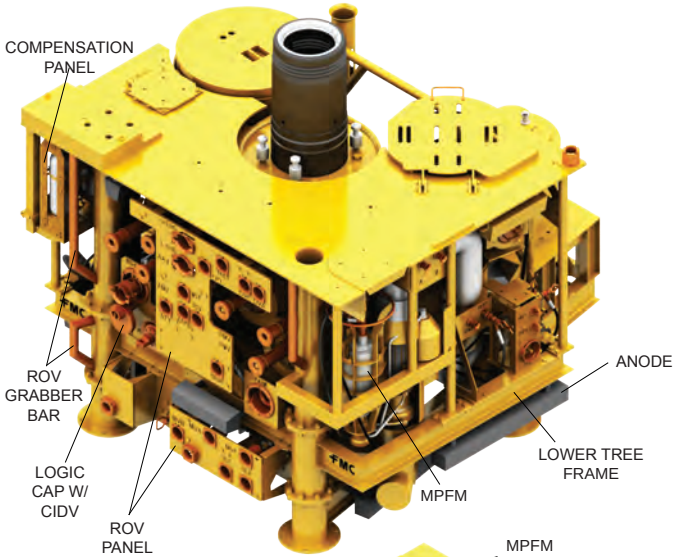

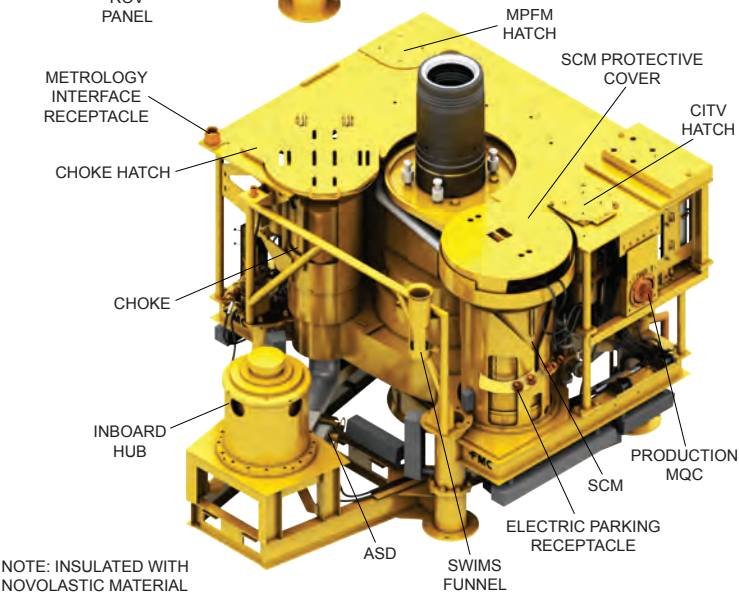

NOTE: INSULATED WITH NOVOLASTIC MATERIAL

6.3 Xmas Tree Production, insulated

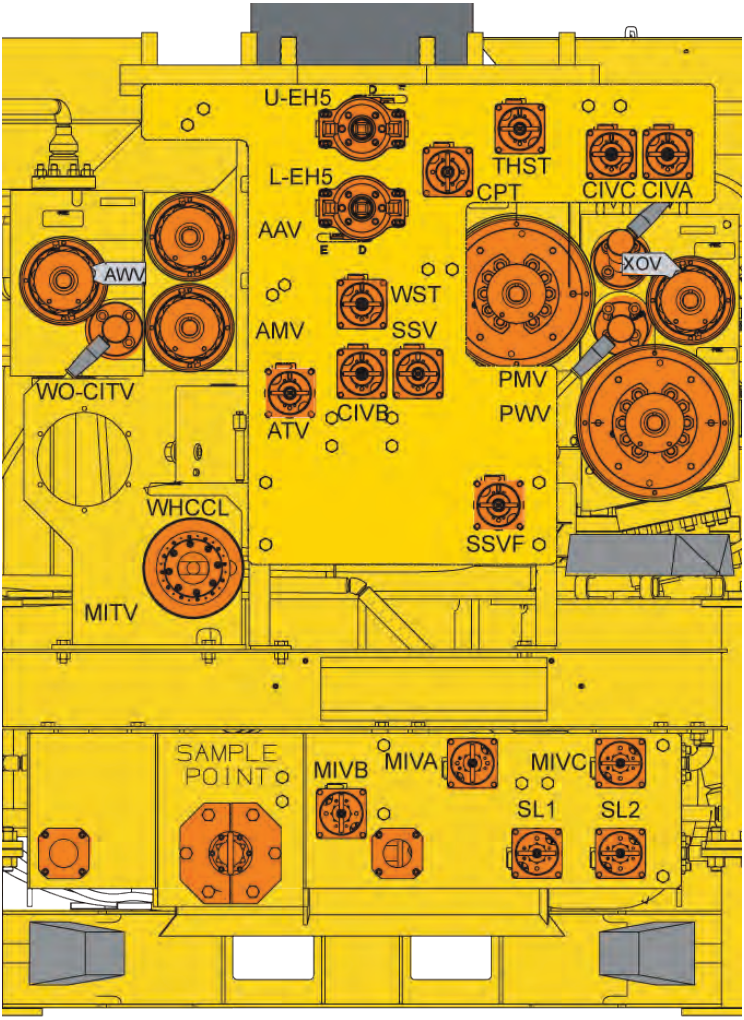

6.3.1 ROV Panel

LINEAR OVERRIDE INTERFACES									
Label	**Type**	**Description**	**ROV Interface**	**Crack Open Load (lbf) (1)**	**Crack Open Pressure via LAOT (psi) (2)**	**Hold Open Load (lbf) (1)**	**Hold Open Pressure via LAOT (psi) (2)**	**Damage Load (lbf) (3)**	**Damage Pressure via LAOT (psi) (3)**
AAV	Hydraulic Linear Actuator	2, 1/6" – 10K M3000, Block Mounted, Actuator/ Gate Valve	ISO 13628-8 Type B	10,651 (0 psi Bore Pressure)	159 (0 psi Bore Pressure)	9,672 (0 psi Bore Pressure)	144 (0 psi Bore Pressure)	138,600	2,068
				33,189 (10 ksi Diff Pressure)	495 (10 ksi Diff Pressure)	24,206 (10 ksi Diff Pressure)	361 (10 ksi Diff Pressure)		
AWV	Hydraulic Linear Actuator	2, 1/16" – 10K M3000, Block Mounted, Actuator/ Gate Valve	ISO 13628-8 Type B	10,651 (0 psi Bore Pressure)	159 (0 psi Bore Pressure)	9,672 (0 psi Bore Pressure)	144 (0 psi Bore Pressure)	138,600	2,068
				33,189 (10 ksi Diff Pressure)	495 (10 ksi Diff Pressure)	24,206 (10 ksi Diff Pressure)	361 (10 ksi Diff Pressure)		
AMV	Hydraulic Linear Actuator	2, 1/16" – 10K M3000, Block Mounted Actuator/ Gate Valve	ISO 13628-8 Type B	10,651 (0 psi Bore Pressure)	159 (0 psi Bore Pressure)	9,672 (0 psi Bore Pressure)	144 (0 psi Bore Pressure)	138,600	2,068
				33,189 (10 ksi Diff Pressure)	495 (10 ksi Diff Pressure)	24,206 (10 ksi Diff Pressure)	361 (10 ksi Diff Pressure)		
PWV	Hydraulic Linear Actuator	5,1/8" – 10K M3000, Block Mounted, Actuator/ Gate Valve	ISO 13628-8 Type B	37,115 (0 psi Bore Pressure)	554 (0 psi Bore Pressure)	41,456 (0 psi Bore Pressure)	618 (0 psi Bore Pressure)	>167,500	>2,500
				110,230 (10 ksi Diff Pressure)	1,645 (10 ksi Diff Pressure)	72,414 (10 ksi Diff Pressure)	1,080 (10 ksi Diff Pressure)		
PMV	Hydraulic Linear Actuator	5,1/8" – 10K M3000, Block Mounted, Actuator/ Gate Valve	ISO 13628-8 Type B	37,115 (0 psi Bore Pressure)	554 (0 psi Bore Pressure)	41,456 (0 psi Bore Pressure)	618 (0 psi Bore Pressure)	>167,500	>2,500
				110,230 (10 ksi Diff Pressure)	1,645 (10 ksi Diff Pressure)	72,414 (10 ksi Diff Pressure)	1,080 (10 ksi Diff Pressure)		
XOV	Hydraulic Linear Actuator	2,1/16" – 10K M3000, Block Mounted, Actuator/ Gate Valve	ISO 13628-8 Type B	10,651 (0 psi Bore Pressure)	159 (0 psi Bore Pressure)	9,672 (0 psi Bore Pressure)	144 (0 psi Bore Pressure)	138,600	2,068
				33,189 (10 ksi Diff Pressure)	495 (10 ksi Diff Pressure)	24,206 (10 ksi Diff Pressure)	361 (10 ksi Diff Pressure)		

6.3.2 Valve Description

ROTARY OVERRIDE INTERFACES								
Label	**Type**	**Description**	**ROV Interface**	**No. of Turns**	**Dir'n to Close / Engage**	**Torque**		
						Nominal	Max. Op.	Damage
U-EH5	Rotary Penetrator [1}	Electro-Hydraulic, 5 Stab, 10K, Penetrator Assembly	ISO 13628-8 Class 4	13	CW	200 ft-lbf (271 Nm)	350 ft-lbf (475 Nm)	513 ft-lb (695 Nm)
L-EH5	Rotary Penetrator [1]	Electro-Hydraulic, 5 Stab, 10K, Penetrator Assembly	ISO 13628-8 Class 4	13	CW	200 ft-lbf (271 Nm)	350 ft-lbf (475 Nm)	513 ft-lb (695 Nm)
CIV C	Hydraulic Rotary Valve [2]	½" –10K M175, Block Mounted, Gate Valve	ISO 13628-8 Type B	5.75	CW	50 ft-lbf (68 Nm)	50 ft-lbf (68 Nm)	400 ft-lb (542 Nm)
CIV A	Hydraulic Rotary Valve [2]	½" –10K M175, Block Mounted, Gate Valve	ISO 13628-8 Type B	5.75	CW	50 ft-lbf (68 Nm)	50 ft-lbf (68 Nm)	400 ft-lb (542 Nm)
CIV B	Hydraulic Rotary Valve [2]	½" –10K M175, Block Mounted, Gate Valve	ISO 13628-8 Type B	5.75	CW	50 ft-lbf (68 Nm)	50 ft-lbf (68 Nm)	400 ft-lb (542 Nm)
THST	Rotary Valve [3]	½" – 15K, Panel Mounted, Oliver Needle Valve	ISO 13628-8 Type B	4-5	CW	50 lbf-ft (68 Nm)	200 lbf-ft (271 Nm)	300 lbf-ft (407 Nm)
CPT	Rotary Valve [3]	½" – 15K, Panel Mounted, Oliver Needle Valve	ISO 13628-8 Type B	4-5	CW	50 lbf-ft (68 Nm)	200 lbf-ft (271 Nm)	300 lbf-ft (407 Nm)
SSV	Rotary Valve [3]	½" – 15K, Panel Mounted, Oliver Needle Valve	ISO 13628-8 Type B	4-5	CW	50 lbf-ft (68 Nm)	200 lbf-ft (271 Nm)	300 lbf-ft (407 Nm)
ATV	Rotary Valve [3]	½" – 15K, Panel Mounted, Oliver Needle Valve	ISO 13628-8 Type B	4-5	CW	50 lbf-ft (68 Nm)	200 lbf-ft (271 Nm)	300 lbf-ft (407 Nm)
SSVF	Rotary Valve [3]	½" – 15K, Panel Mounted, Oliver Needle Valve	ISO 13628-8 Type B	4-5	CW	50 lbf-ft (68 Nm)	200 lbf-ft (271 Nm)	300 lbf-ft (407 Nm)

ROTARY OVERRIDE INTERFACES								
Label	**Type**	**Description**	**ROV Interface**	**No. of Turns**	**Dir'n to Close / Engage**	**Torque**		
						Nominal	Max. Op.	Damage
MIVB	Gate Valve [4]	1 -10K, W/ Actuator, FF, P-U Multi-lip Stack Stem Seal	ISO 13628-8 Type B	10-11	CW	70-90 lbf-ft (95-122 Nm)	250 lbf-ft (339 Nm)	365 lbf-ft (495 Nm)
MIVA	Gate Valve [5]	1 -10K, W/ Actuator, FF, P-U Multi-lip Stack Stem Seal, W/ 1" Check Valve	ISO 13628-8 Type B	10-11	CW	70-90 lbf-ft (95-122 Nm)	250 lbf-ft (339 Nm)	365 lbf-ft (495 Nm)
MIVC	Gate Valve [4]	1 -10K, W/ Manual, FF, P-U Multi-lip Stack Stem Seal	ISO 13628-8 Type B	10-11	CW	70-90 lbf-ft (95-122 Nm)	250 lbf-ft (339 Nm)	365 lbf-ft (495 Nm)
SL1	Gate Valve [6]	1 -10K, W/ Manual, FF, P-U Multi-lip Stack Stem Seal, High Torque	ISO 13628-8 Type B	10-11	CW	70-90 lbf-ft (95-122 Nm)	250 lbf-ft (339 Nm)	365 lbf-ft (495 Nm)
SL2	Gate Valve [6]	1 -10K, W/ Manual, FF, P-U Multi-lip Stack Stem Seal, High Torque	ISO 13628-8 Type B	10-11	CW	70-90 lbf-ft (95-122 Nm)	250 lbf-ft (339 Nm)	365 lbf-ft (495 Nm)

STAB PLATE INTERFACES								
Label	**Type**	**Desc.**	**ROV Interface**	**No. of Turns**	**Dir'n to Close**	**Torque**		
						Nominal	**Max. Op.**	**Damage**
WO-CITV (LOGIC CAP)	Stab Plate [1]	FKS MQC Mk II 13 Way, Panel Mounted, Stab Plate	ISO 13628-8 Class 4	11-11.5	CW	Nom. 546 lbf-ft (740 Nm) Max. 738 lbf-ft (1000 Nm)	Nom. 546 lbf-ft (740 Nm) Max. 738 lbf-ft (1000 Nm)	1106 lbf-ft (1500Nm)

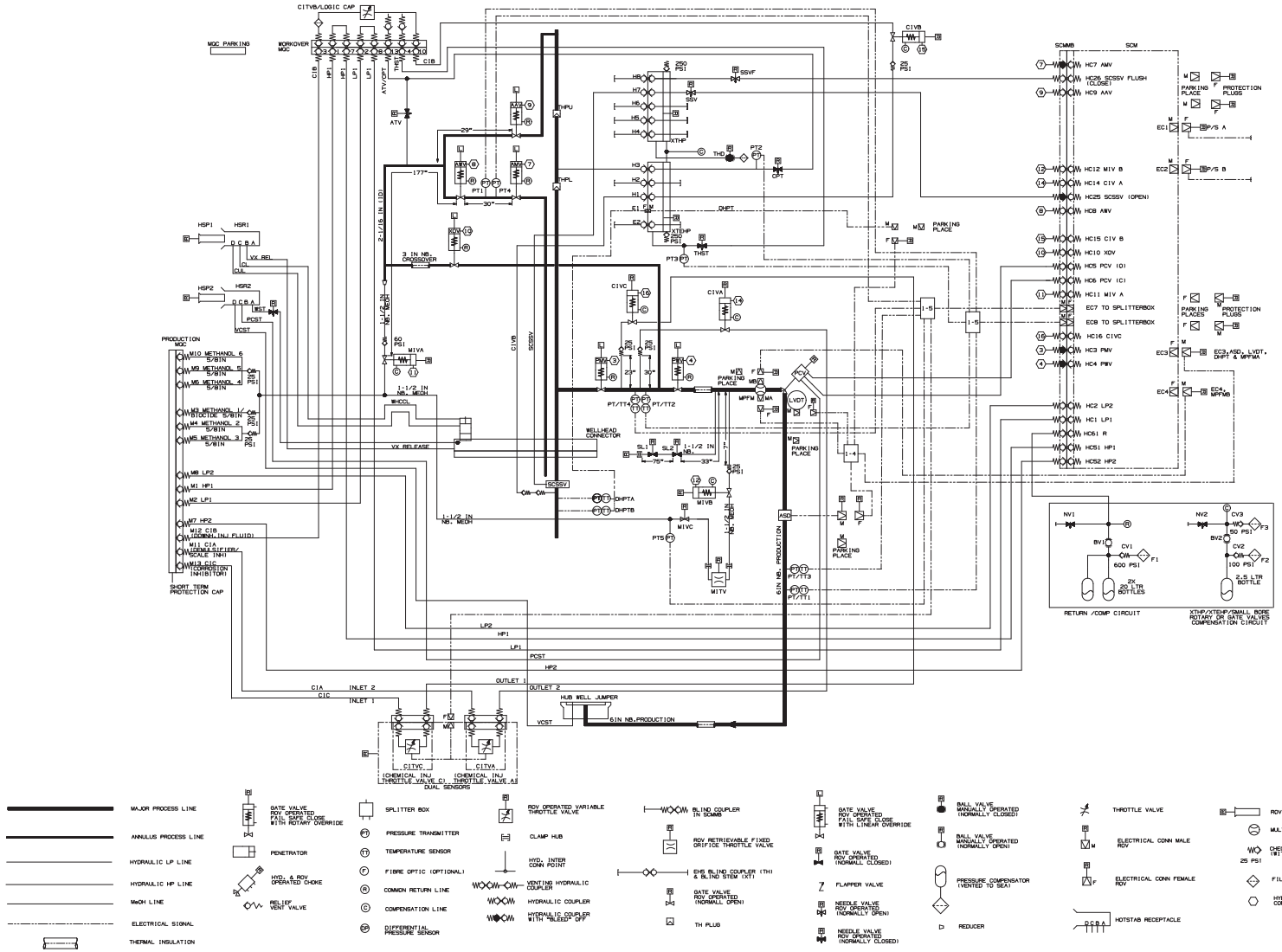

REFERENCE IS MADE TO
DU200019054/AO-040-SX-400-130587

6.3.3 XT Schematic Production

TOP VIEW

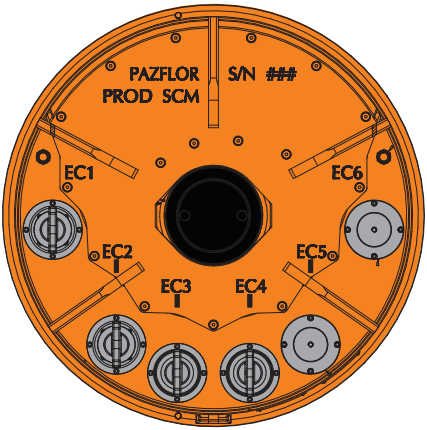

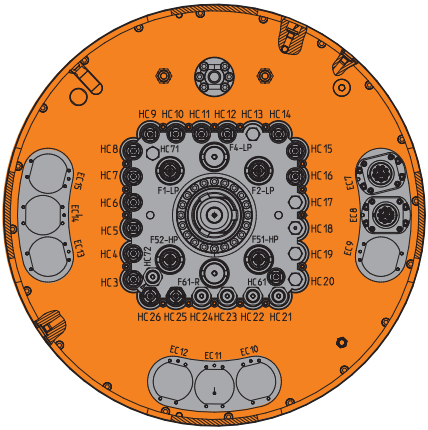

BOTTOM VIEW

6.4 SCM Production

Notes:
1. not to be used in this mode
2. To be tested at SCM FAT

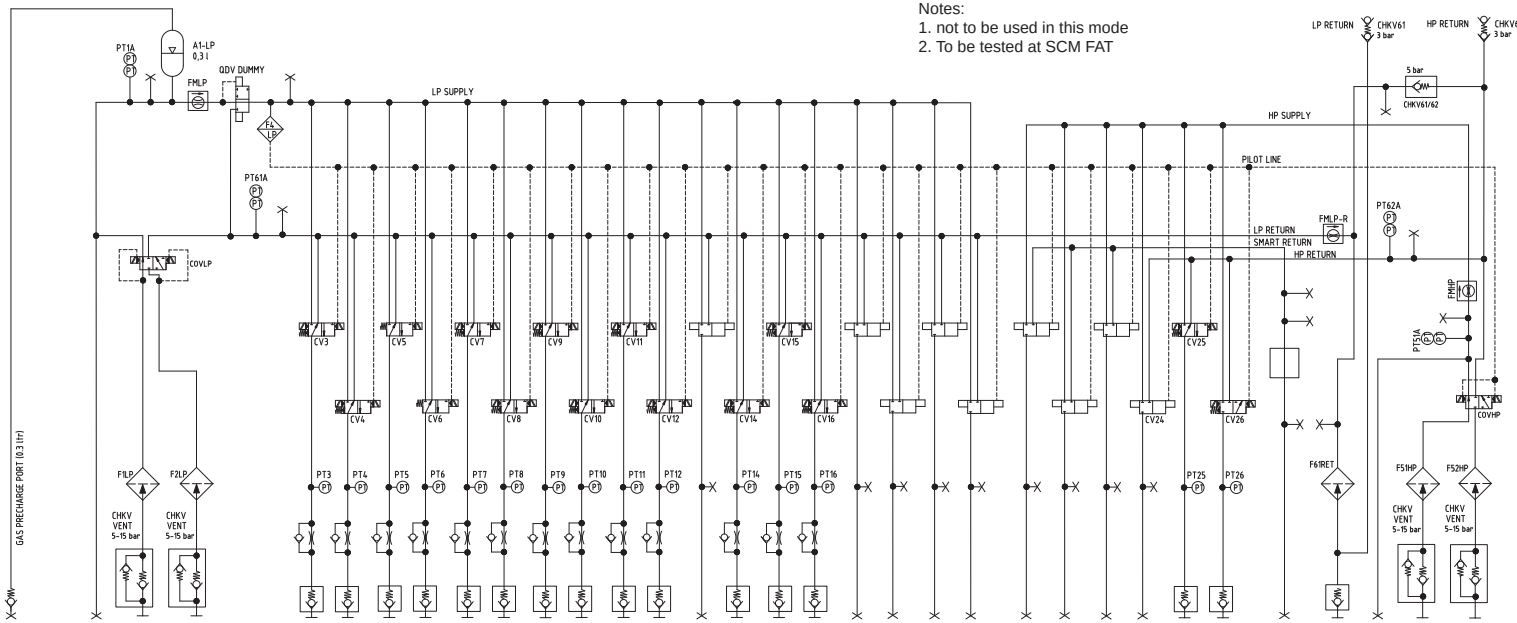

HYDR. LINES:	HC71	HC1	HC2	HC3	HC4	HC5	HC6	HC7	HC8	HC9	HC10	HC11	HC12	HC13	HC14	HC15	HC16	HC17	HC18	HC19	HC20	HC21	HC22	HC23	HC24	HC25	HC26	HC61	HC72	HC51	HC52
W.P. [BAR]:		345	345	345	345	345	345	345	345	345	345	345	345		345	345	345					-	-	-		690	690	50		690	690
RETURN CONFIGURATION:																										HP	HP				
FLOW RESTRICTION [BAR / (l/s)²]:				1600	1600	5900	5900	1600	1600	1600	1600	1600	1600		1600	1600	1600					-	-	-							
Function main mode: Production XT		LP 1	LP 2	PMV	PWV	PCV(O)	PCV(C)	AMV	AWV		XOV	MIV A	MIV B		CIV A	CIV B	CIV C									SCSSV OPEN	NOTE 1	RETURN		HP 1	HP 2
-		-	-	-	-	-	-	-	-		-	-	-		-	-	-					-	-	-		-	-	-		-	-
Function sub mode: WOCS Production XT		LP 1	LP 2	PMV	PWV	PCV(O)	PCV(C)	AMV	AWV	AAV	XOV	MIV A	MIV B		CIV A	CIV B	CIV C									SCSSV OPEN	NOTE 1	RETURN		HP 1	HP 2
-		-	-	-	-	-	-	-	-	-	-	-	-		-	-	-					-	-	-		-	-	-		-	-
NOTE:																											NOTE 2				

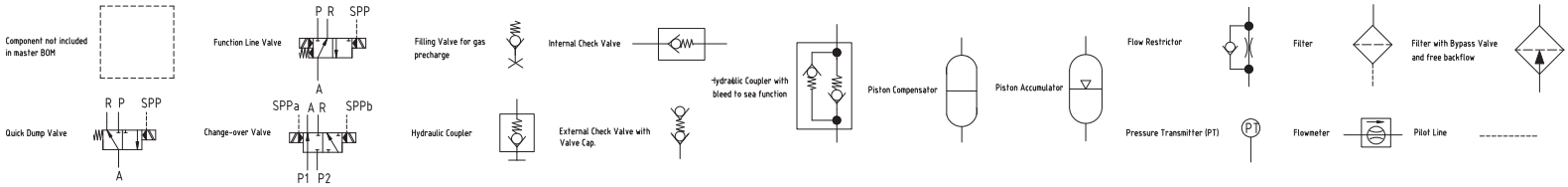

6.4.1 SCM Schematic, Production

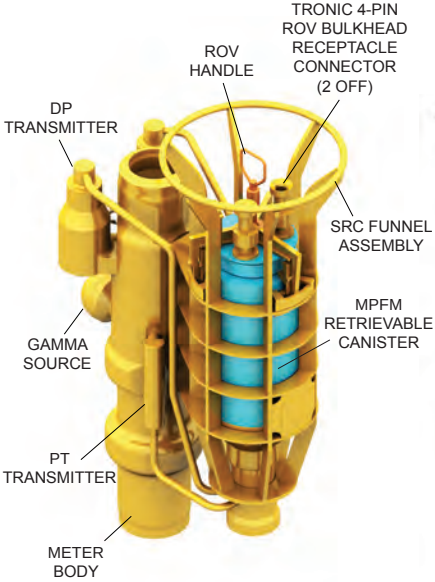

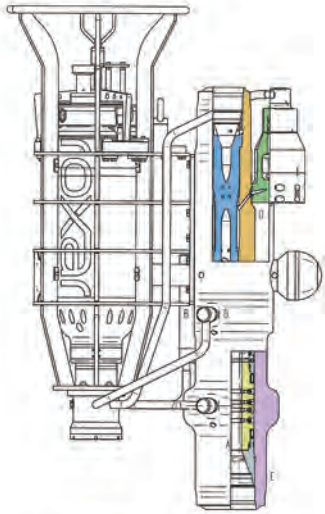

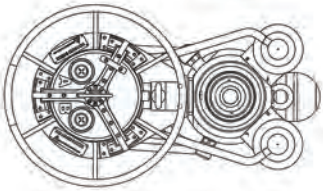

TOP VIEW

NOTE: INSULATION
REMOVED FOR CLARITY

6.5 Multiphase Flowmeter

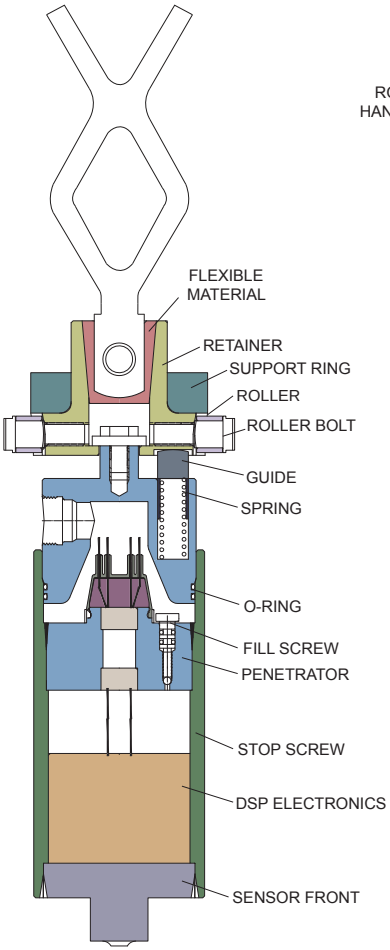

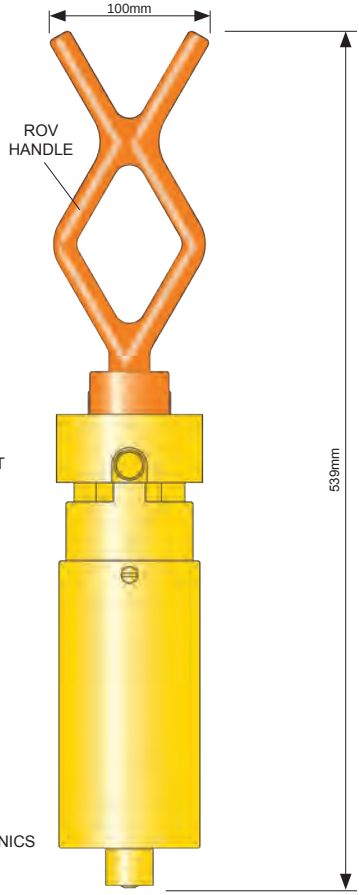

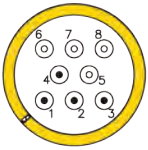

6.6 Acoustic Sand Detector

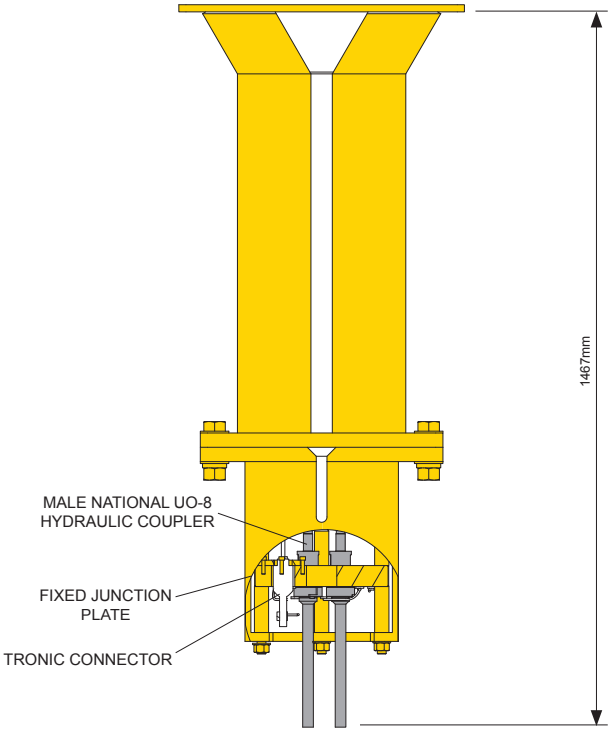

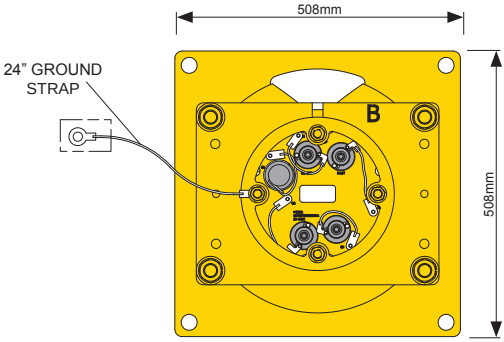

6.7 CIDV, Dual Core

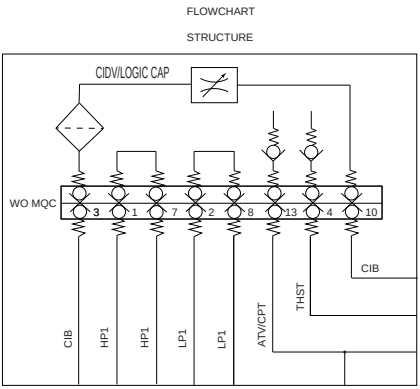

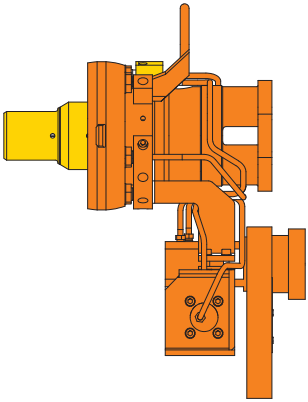

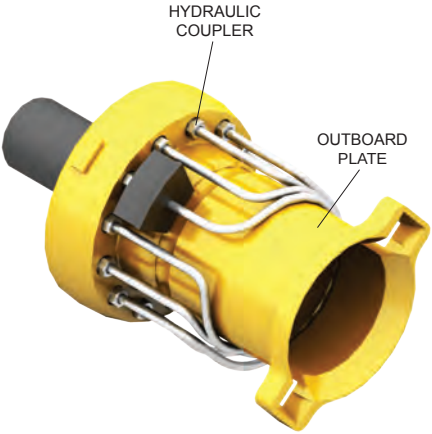

6.8 Logic Cap, 6 lines

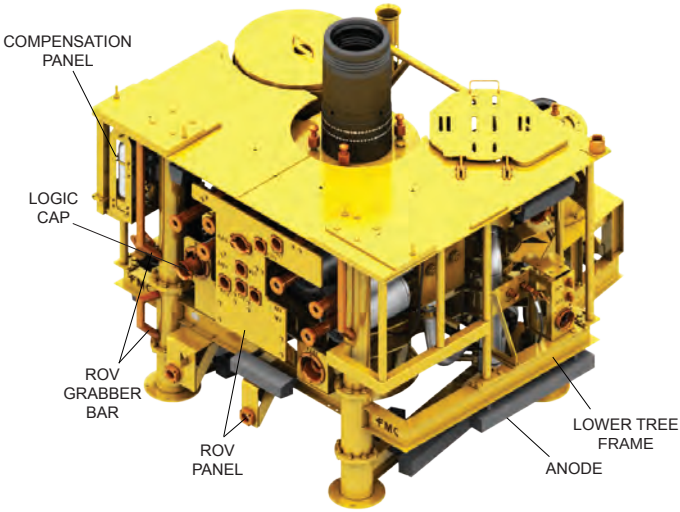

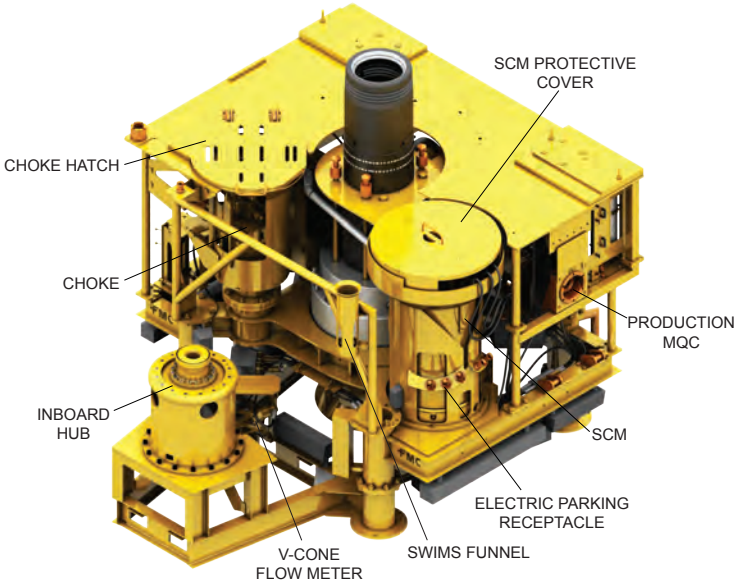

6.9 Xmas Tree Gas and Water Injection

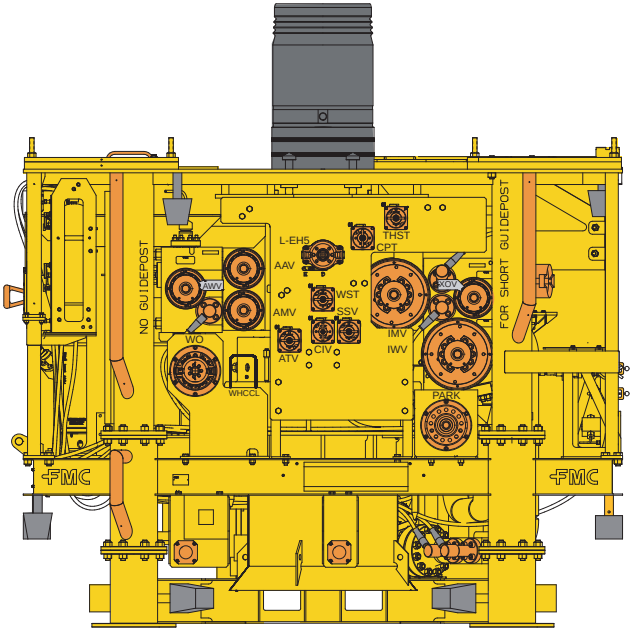

LINEAR OVERRIDE INTERFACES									
Label	**Type**	**Description**	**ROV Interface**	**Crack Open Load (lbf) (1)**	**Crack Open Pressure via LAOT (psi) (2)**	**Hold Open Load (lbf) (1)**	**Hold Open Pressure via LAOT (psi) (2)**	**Damage Load (lbf) (3)**	**Damage Pressure via LAOT (psi) (3)**
AAV	Hydraulic Linear Actuator	2 1/6" – 10K M3000, Block Mounted, Actuator/ Gate Valve	ISO 13628-8 Type B	10,651 (0 psi Bore Pressure)	159 (0 psi Bore Pressure)	9,672 (0 psi Bore Pressure)	144 (0 psi Bore Pressure)	138,600	2,068
				33,189 (10 ksi Diff Pressure)	495 (10 ksi Diff Pressure)	24,206 (10 ksi Diff Pressure)	361 (10 ksi Diff Pressure)		
AMV	Hydraulic Linear Actuator	2 1/16" – 10K M3000, Block Mounted Actuator/ Gate Valve	ISO 13628-8 Type B	10,651 (0 psi Bore Pressure)	159 (0 psi Bore Pressure)	9,672 (0 psi Bore Pressure)	144 (0 psi Bore Pressure)	138,600	2,068
				33,189 (10 ksi Diff Pressure)	495 (10 ksi Diff Pressure)	24,206 (10 ksi Diff Pressure)	361 (10 ksi Diff Pressure)		
IWV	Hydraulic Linear Actuator	5 1/8" – 10K M3000, Block Mounted, Actuator/ Gate Valve	ISO 13628-8 Type B	37,115 (0 psi Bore Pressure)	554 (0 psi Bore Pressure)	41,456 (0 psi Bore Pressure)	618 (0 psi Bore Pressure)	>167,500	>2,500
				110,230 (10 ksi Diff Pressure)	1,645 (10 ksi Diff Pressure)	72,414 (10 ksi Diff Pressure)	1,080 (10 ksi Diff Pressure)		
IMV	Hydraulic Linear Actuator	5 1/8" – 10K M3000, Block Mounted, Actuator/ Gate Valve	ISO 13628-8 Type B	37,115 (0 psi Bore Pressure)	554 (0 psi Bore Pressure)	41,456 (0 psi Bore Pressure)	618 (0 psi Bore Pressure)	>167,500	>2,500
				110,230 (10 ksi Diff Pressure)	1,645 (10 ksi Diff Pressure)	72,414 (10 ksi Diff Pressure)	1,080 (10 ksi Diff Pressure)		

6.9.1 ROV Panel

ROTARY OVERRIDE INTERFACES								
Label	**Type**	**Description**	**ROV Interface**	**No. of Turns**	**Dir'n to Close / Engage**	**Torque**		
						Nominal	Max. Op.	Damage
L-EH5	Rotary Penetrator [1]	Electro-Hydraulic, 5 Stab, 10K, Penetrator Assembly	ISO 13628-8 Class 4	13	CW	200 ft-lbf (271 Nm)	350 ft-lbf (475 Nm)	513 ft-lb (695 Nm)
CIV	Hydraulic Rotary Valve [2]	½" –10K M175, Block Mounted, Gate Valve	ISO 13628-8 Type B	5.75	CW	50 ft-lbf (68 Nm)	50 ft-lbf (68 Nm)	400 ft-lb (542 Nm)
THST	Rotary Valve [4]	½" – 15K, Panel Mounted, Oliver Needle Valve	ISO 13628-8 Type B	4-5	CW	50 lbf-ft (68 Nm)	200 lbf-ft (271 Nm)	300 lbf-ft (407 Nm)
CPT	Rotary Valve [4]	½" – 15K, Panel Mounted, Oliver Needle Valve	ISO 13628-8 Type B	4-5	CW	50 lbf-ft (68 Nm)	200 lbf-ft (271 Nm)	300 lbf-ft (407 Nm)
ATV	Rotary Valve [4]	½" – 15K, Panel Mounted, Oliver Needle Valve	ISO 13628-8 Type B	4-5	CW	50 lbf-ft (68 Nm)	200 lbf-ft (271 Nm)	300 lbf-ft (407 Nm)
WST	Rotary Valve [3]	½" – 15K, Block Mounted, Oliver Needle Valve	ISO 13628-8 Type B	4-5	CW	50 lbf-ft (68 Nm)	200 lbf-ft (271 Nm)	300 lbf-ft (407 Nm)

6.9.2 Valve Description

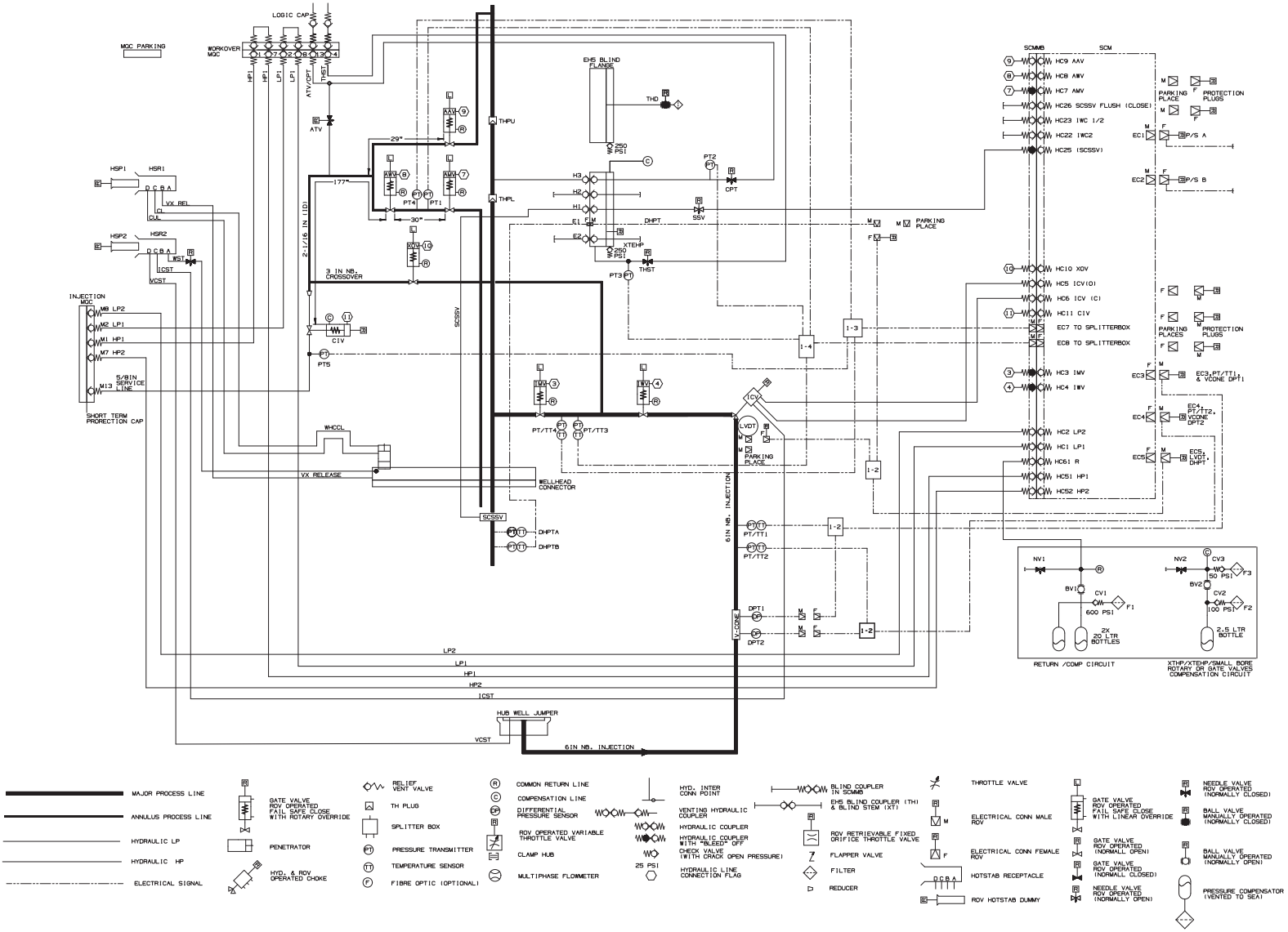

6.9.3 XT Schematic Water Injection wo/IWC

REFERENCE IS MADE TO
DU200018773/AO-040-SX-400-130584

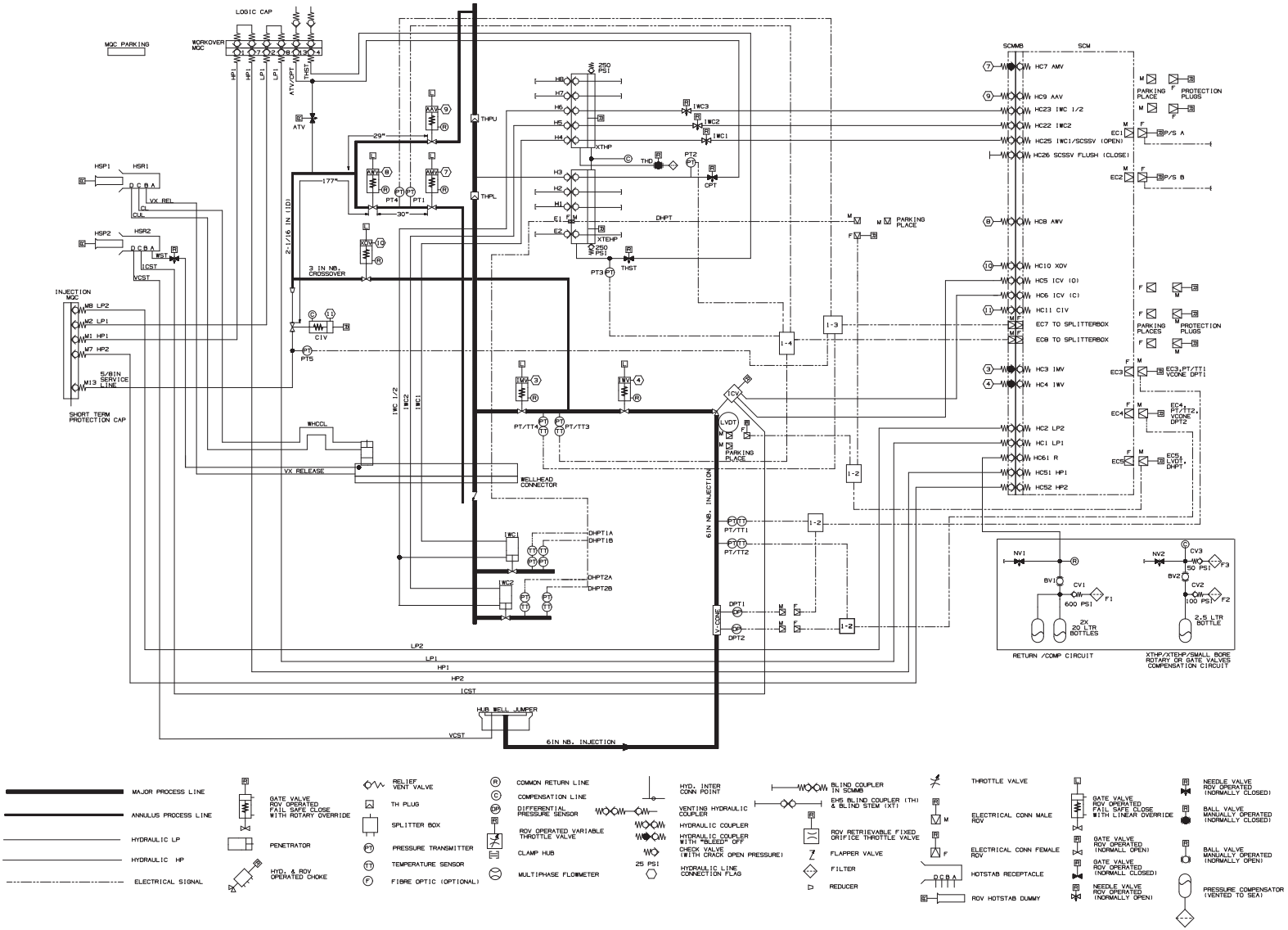

REFERENCE IS MADE TO
DU200019010/AO-040-SX-400-130586

6.9.4 XT Schematic Water injection w/IWC

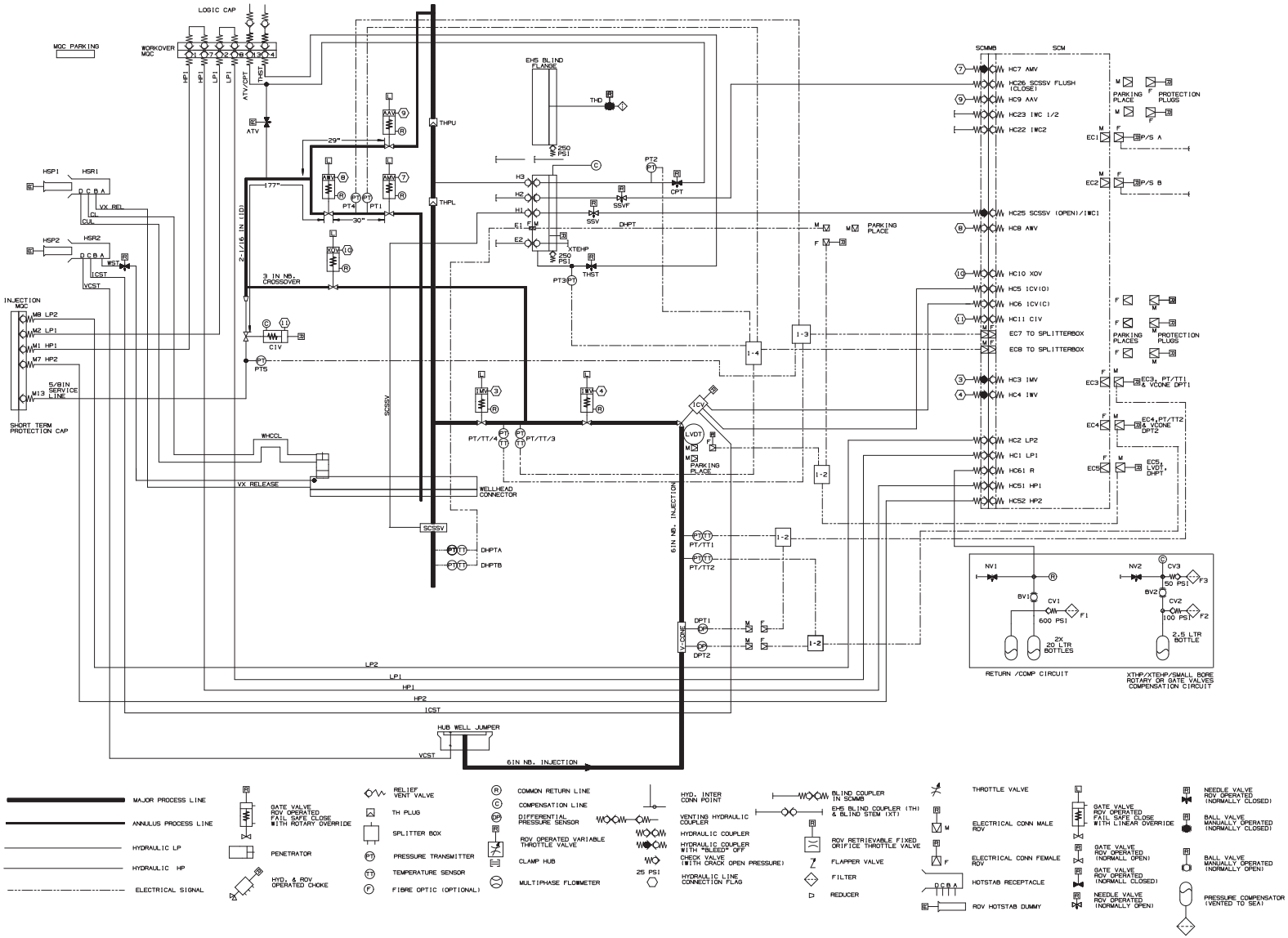

REFERENCE IS MADE TO DU200018864/AO-040-SX-400-130585

6.9.5 XT Schematic, Gas Injection

Notes:
1. not to be used in this mode
2. To be tested at SCM FAT

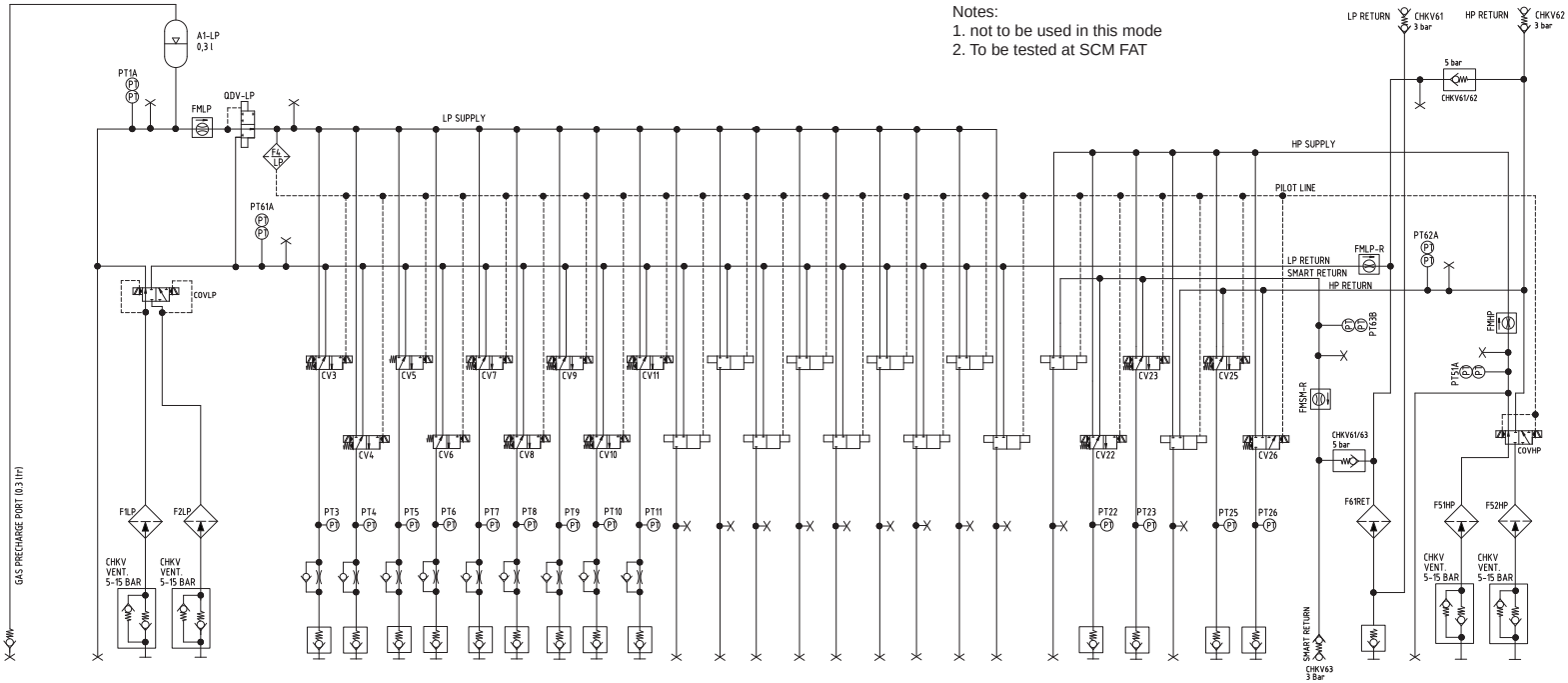

HYDR. LINES:	HC71	HC1	HC2	HC3	HC4	HC5	HC6	HC7	HC8	HC9	HC10	HC11	HC12	HC13	HC14	HC15	HC16	HC17	HC18	HC19	HC20	HC21	HC22	HC23	HC24	HC25	HC26	HC61	HC72	HC51	HC52
W.P. (BAR):		345	345	345	345	345	345	345	345	345	345	345											690	690		690	690	50		690	690
RETURN CONFIGURATION:																							SM	SM		HP	HP				
FLOW RESTRICTION (BAR / (l/s)²):				1600	1600	5900	5900	1600	1600	1600	1600	1600																			
Function mode: 1 Gas Injection		LP 1	LP 2	IMV	IWV	ICV(O)	ICV(C)	AMV	AWV	NOTE 1	XOV	CIV											NOTE 1	NOTE 1		SCSSV OPEN	NOTE 1		RETURN	HP 1	HP 2
Function mode: 2 W.I. w/IWC		LP 1	LP 2	IMV	IWV	ICV(O)	ICV(C)	AMV	AWV	NOTE 1	XOV	CIV											IWC 2	IWC 1/2		IWC1	NOTE 1		RETURN	HP 1	HP 2
Function mode: 3 W.I. w/o IWC		LP 1	LP 2	IMV	IWV	ICV(O)	ICV(C)	AMV	AWV	NOTE 1	XOV	CIV											NOTE 1	NOTE 1		SCSSV OPEN	NOTE 1		RETURN	HP 1	HP 2
Function mode: 4 WOCS Gas injection		LP 1	LP 2	IMV	IWV	ICV(O)	ICV(C)	AMV	AWV	AAV	XOV	CIV											NOTE 1	NOTE 1		SCSSV OPEN	NOTE 1		RETURN	HP 1	HP 2
Function mode: 5 WOCS W.I. w/o IWC		LP 1	LP 2	IMV	IWV	ICV(O)	ICV(C)	AMV	AWV	AAV	XOV	CIV											NOTE 1	NOTE 1		SCSSV OPEN	NOTE 1		RETURN	HP 1	HP 2
Function mode: 6 WOCS W.I. w/IWC		LP 1	LP 2	IMV	IWV	ICV(O)	ICV(C)	AMV	AWV	AAV	XOV	CIV											IWC 2	IWC 1/2		IWC1	NOTE 1		RETURN	HP 1	HP 2
NOTE:	Ext. LP Accumul.																										NOTE 2		Ext. HP Accumul.		

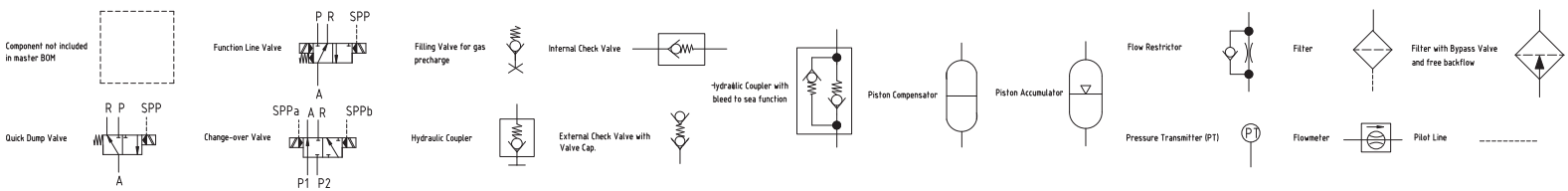

REFERENCE IS MADE TO
DA600032693/AO-040-SX-400-150011

6.10 SCM Schematic, Injection wo/IWC

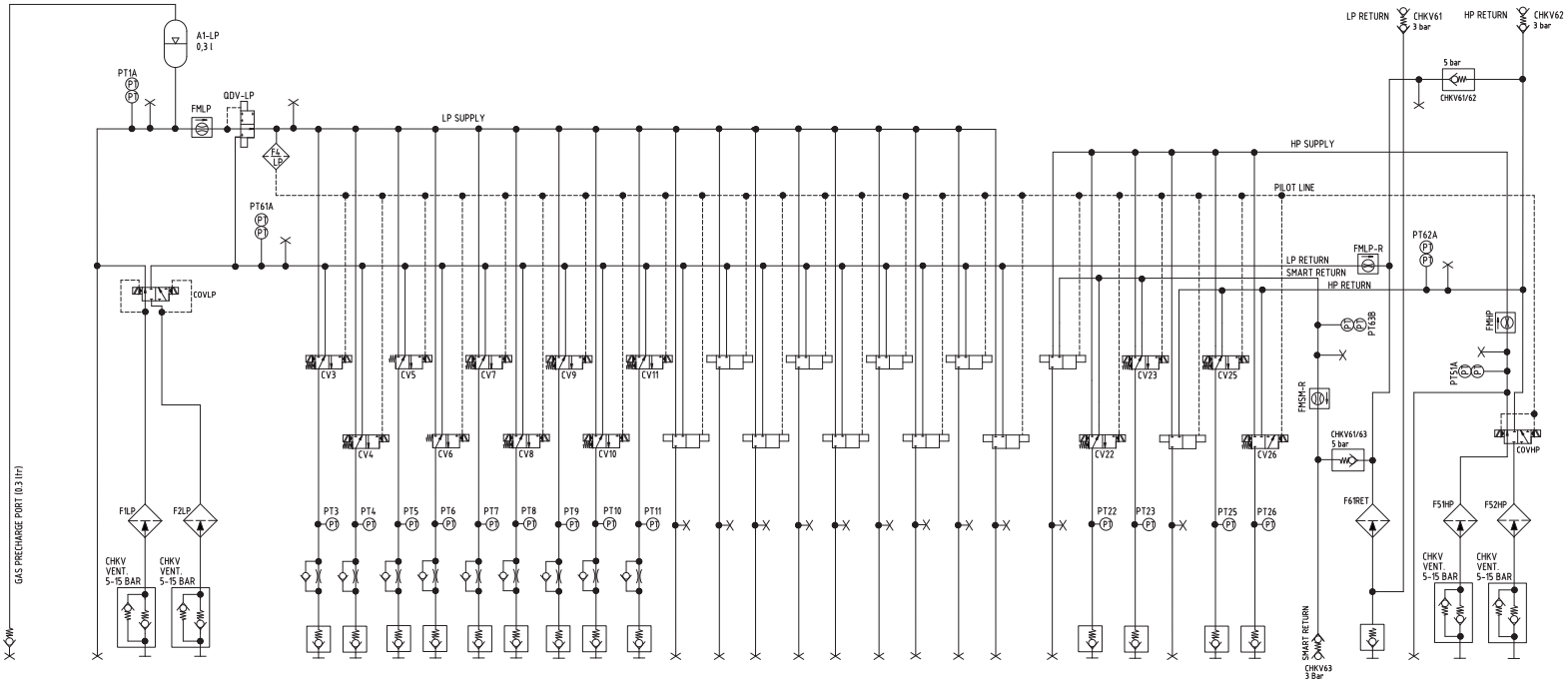

HYDR. LINES:	HC71	HC1	HC2	HC3	HC4	HC5	HC6	HC7	HC8	HC9	HC10	HC11	HC12	HC13	HC14	HC15	HC16	HC17	HC18	HC19	HC20	HC21	HC22	HC23	HC24	HC25	HC26	HC61	HC72	HC51	HC52
W.P. [BAR]:		345	345	345	345	345	345	345	345	345	345	345											690	690		690	690	50		690	690
RETURN CONFIGURATION:																							SM	SM		HP	HP				
FLOW RESTRICTION [BAR / (l/s)²]:				1600	1600	5900	5900	1600	1600	1600	1600	1600																			
Function mode: 1 Gas Injection		LP 1	LP 2	IMV	IWV	ICV(O)	ICV(C)	AMV	AWV	NOTE 1	XOV	CIV											NOTE 1	NOTE 1		SCSSV OPEN	NOTE 1	RETURN		HP 1	HP 2
Function mode: 2 W.I. w/IWC		LP 1	LP 2	IMV	IWV	ICV(O)	ICV(C)	AMV	AWV	NOTE 1	XOV	CIV											IWC 2	IWC 1/2		IWC1	NOTE 1	RETURN		HP 1	HP 2
Function mode: 3 W.I. w/o IWC		LP 1	LP 2	IMV	IWV	ICV(O)	ICV(C)	AMV	AWV	NOTE 1	XOV	CIV											NOTE 1	NOTE 1		SCSSV OPEN	NOTE 1	RETURN		HP 1	HP 2
Function mode: 4 WOCS Gas injection		LP 1	LP 2	IMV	IWV	ICV(O)	ICV(C)	AMV	AWV	AAV	XOV	CIV											NOTE 1	NOTE 1		SCSSV OPEN	NOTE 1	RETURN		HP 1	HP 2
Function mode: 5 WOCS W.I. w/o IWC		LP 1	LP 2	IMV	IWV	ICV(O)	ICV(C)	AMV	AWV	AAV	XOV	CIV											NOTE 1	NOTE 1		SCSSV OPEN	NOTE 1	RETURN		HP 1	HP 2
Function mode: 6 WOCS W.I. w/IWC		LP 1	LP 2	IMV	IWV	ICV(O)	ICV(C)	AMV	AWV	AAV	XOV	CIV											IWC 2	IWC 1/2		IWC1	NOTE 1	RETURN		HP 1	HP 2
NOTE:	Ext. LP Accumul.																										NOTE 2		Ext. HP Accumul.		

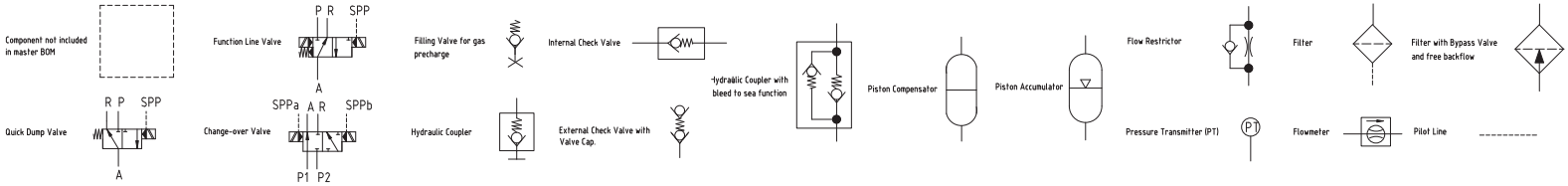

6.11 SCM Schematic, Gas Injection

REFERENCE IS MADE TO
DA600032693/AO-040-SX-400-150011

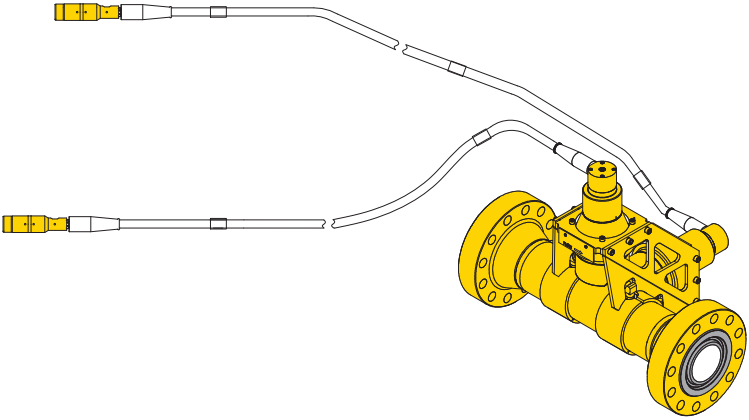

Flowrate min/max: Water application min/max: 3200 / 32000 barrels/d
Gas application min/max: 0.8 / 2.0 MSm^3/d

6.12 V-Cone, Flowmeter

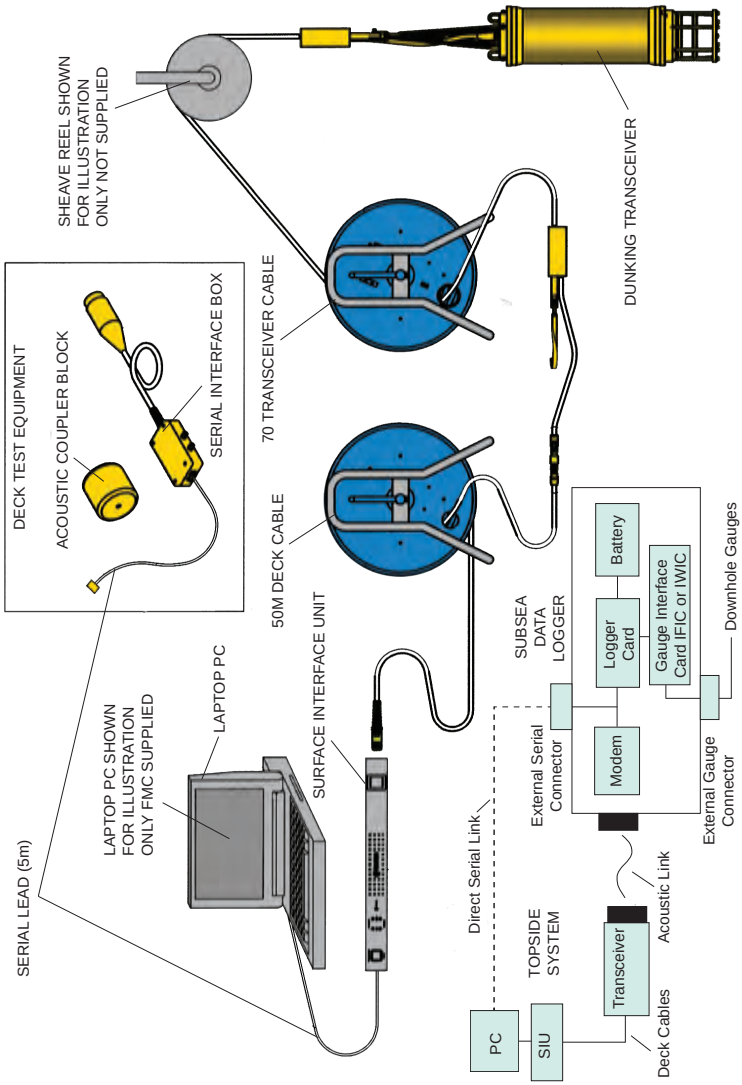

6.13 Swims, Topside

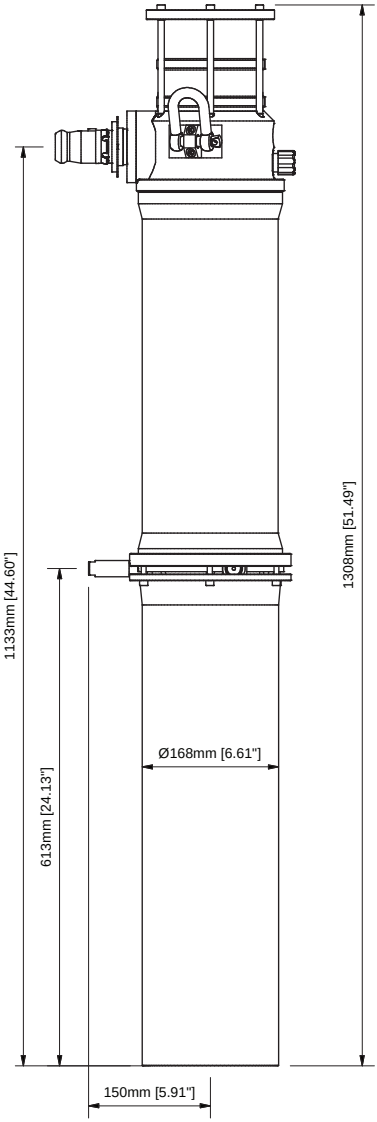

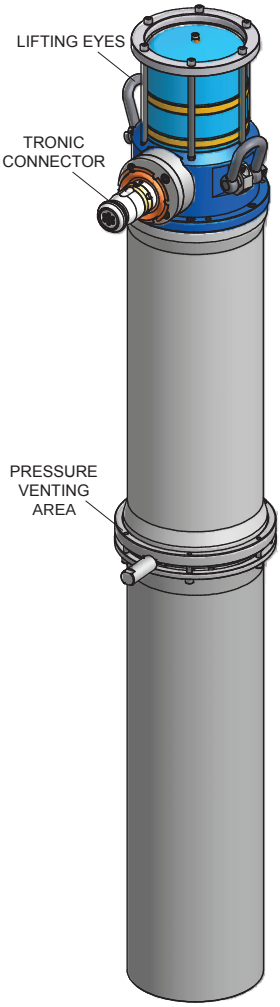

6.14 SWIMS, Subsea

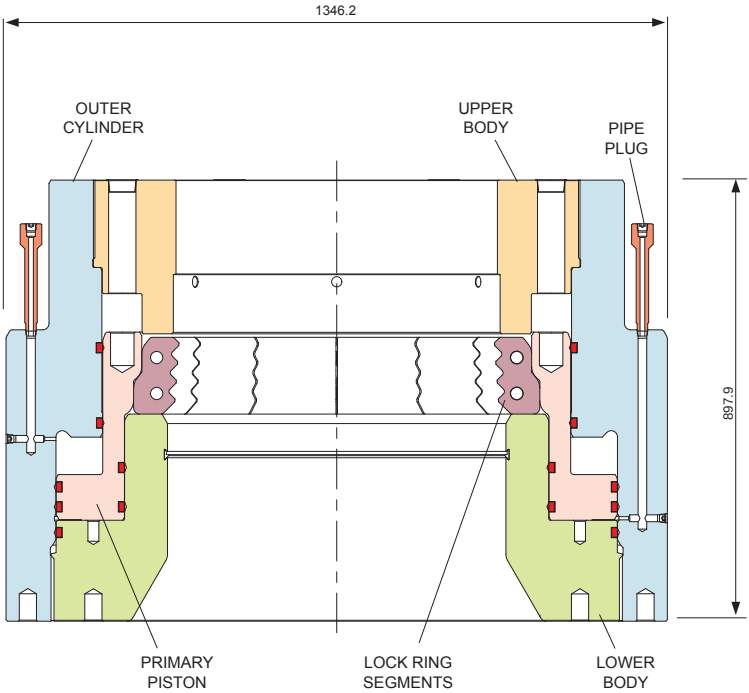

6.15 Torus IV Connector

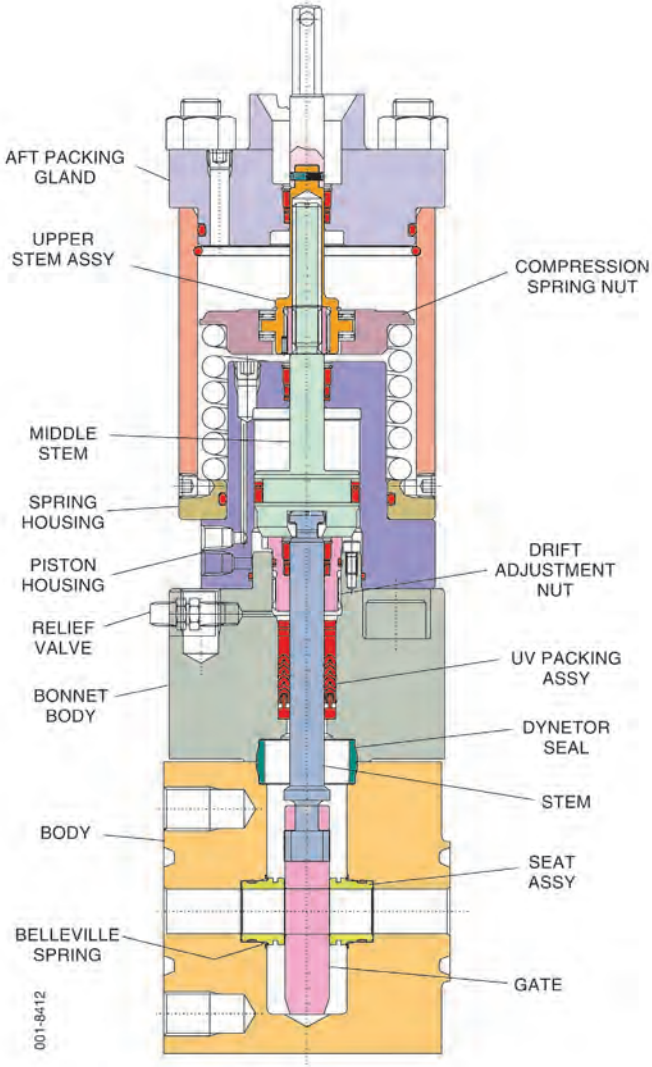

6.16 Gate valve 1” + Actuator

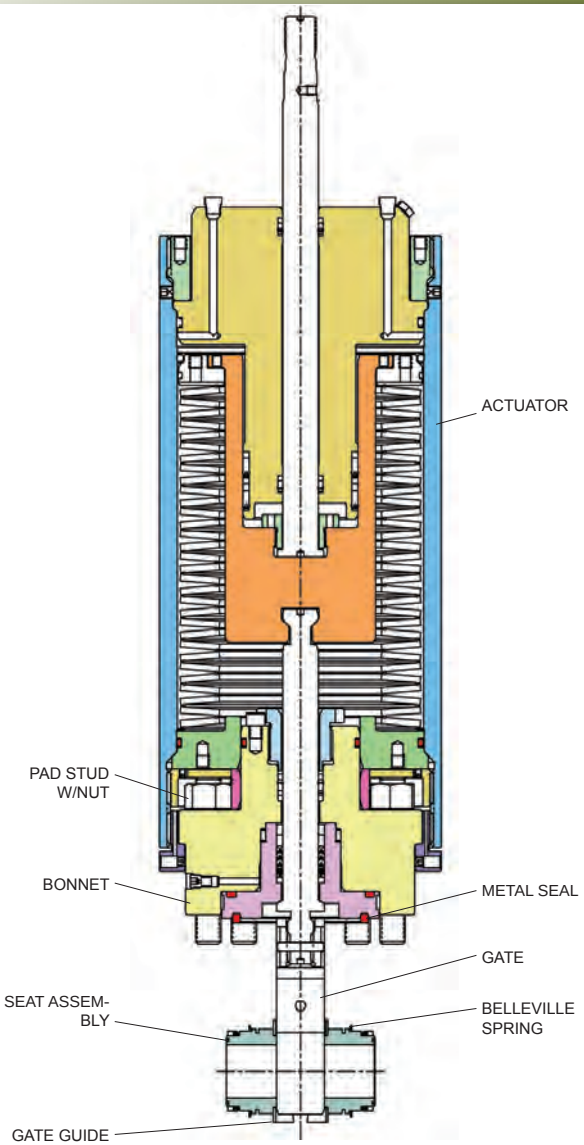

6.17 Gate Valve 2 1/16” and 5 1/8” + Actuator

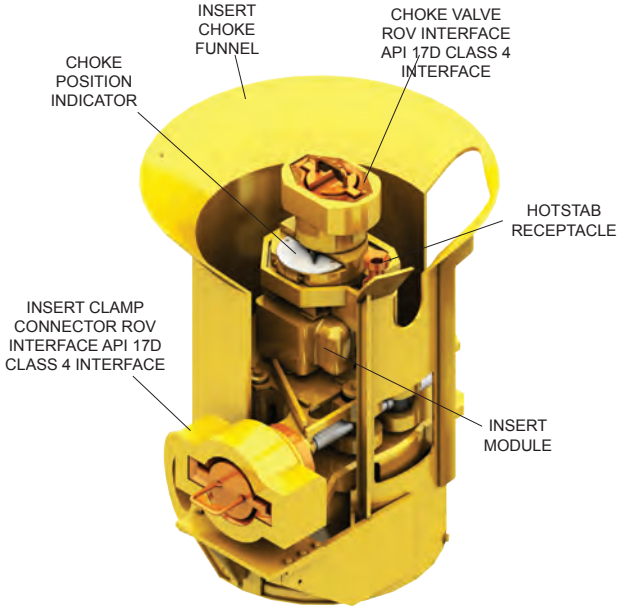

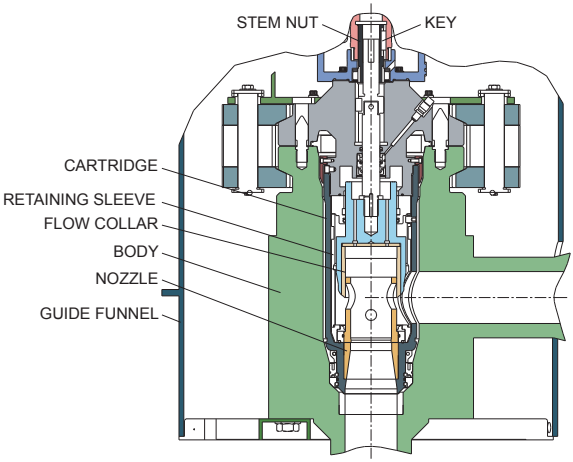

Note: Production insert: CV205
Injection insert: CV185

6.18 Insert Choke

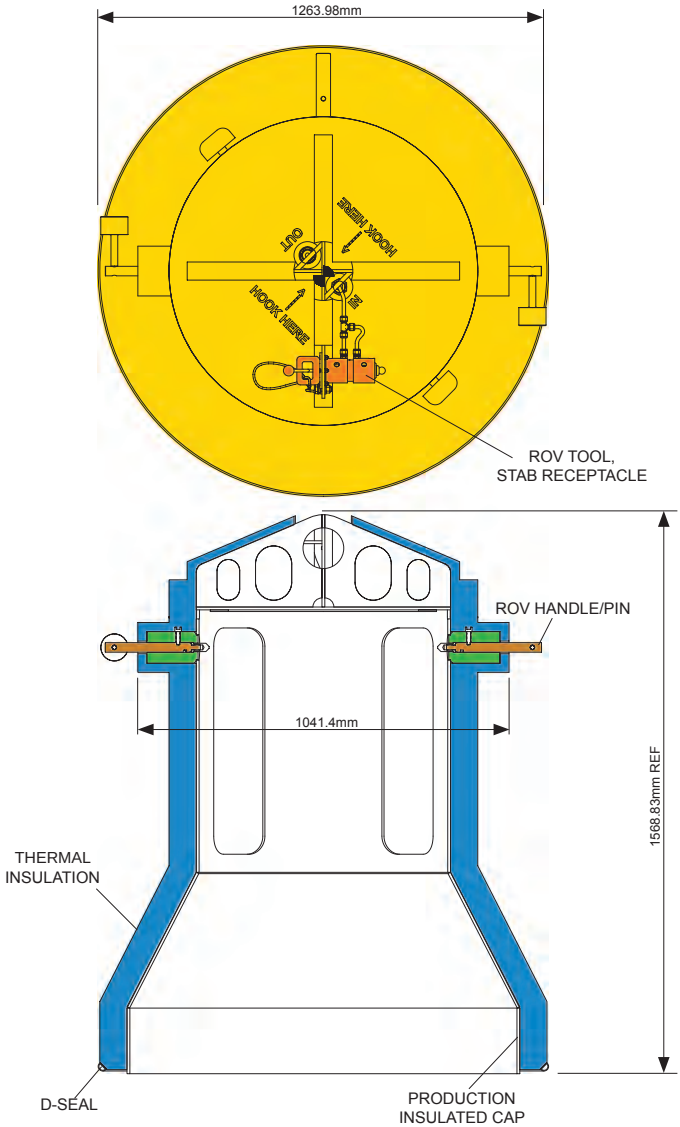

6.19 Production Insulated Cap

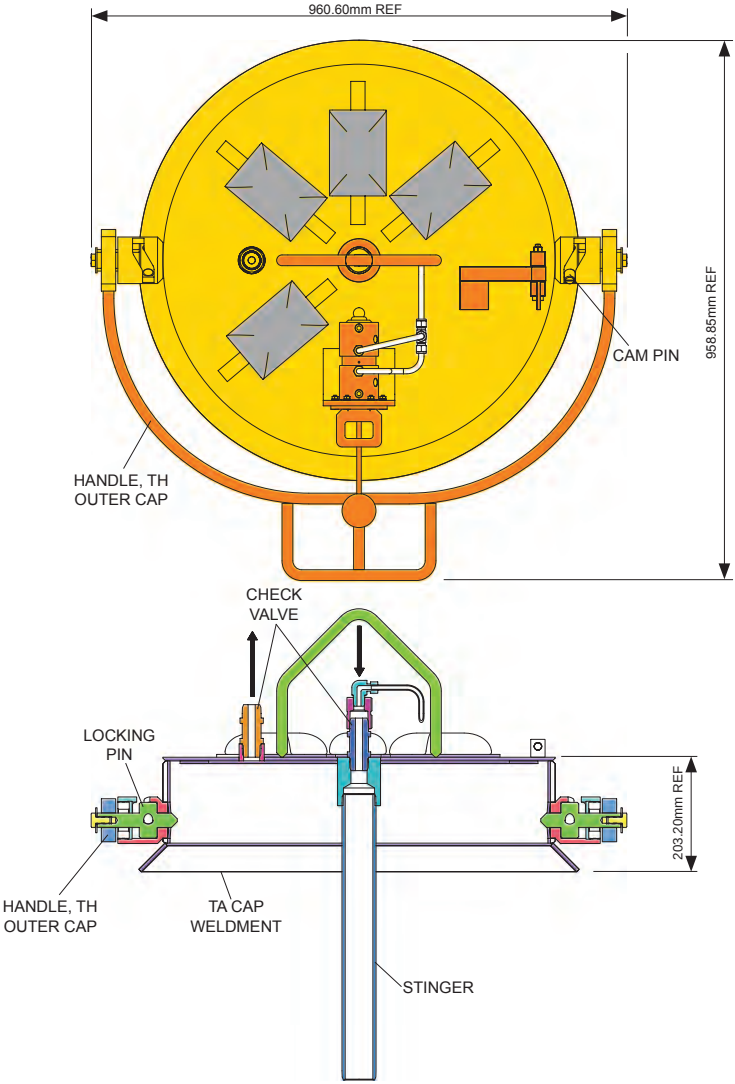

6.20 Debris Cap Injection

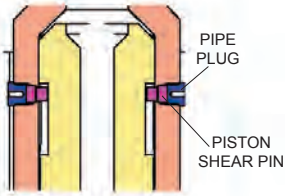

SECTION A-A

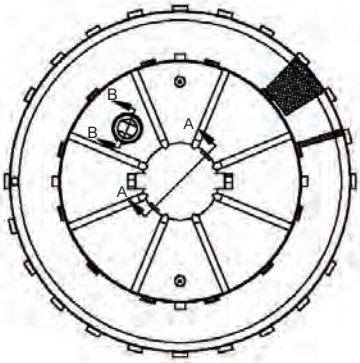

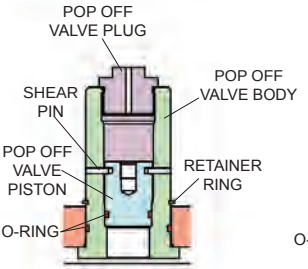

SECTION B-B

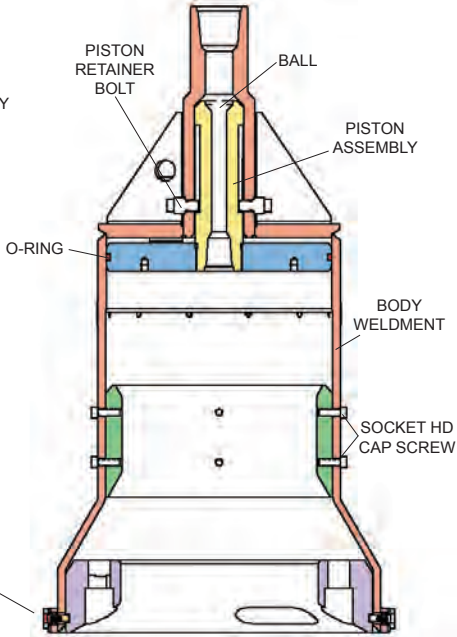

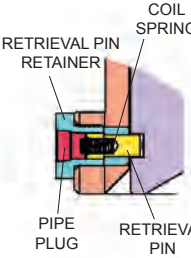

6.21 XT Mechanical Release Tool

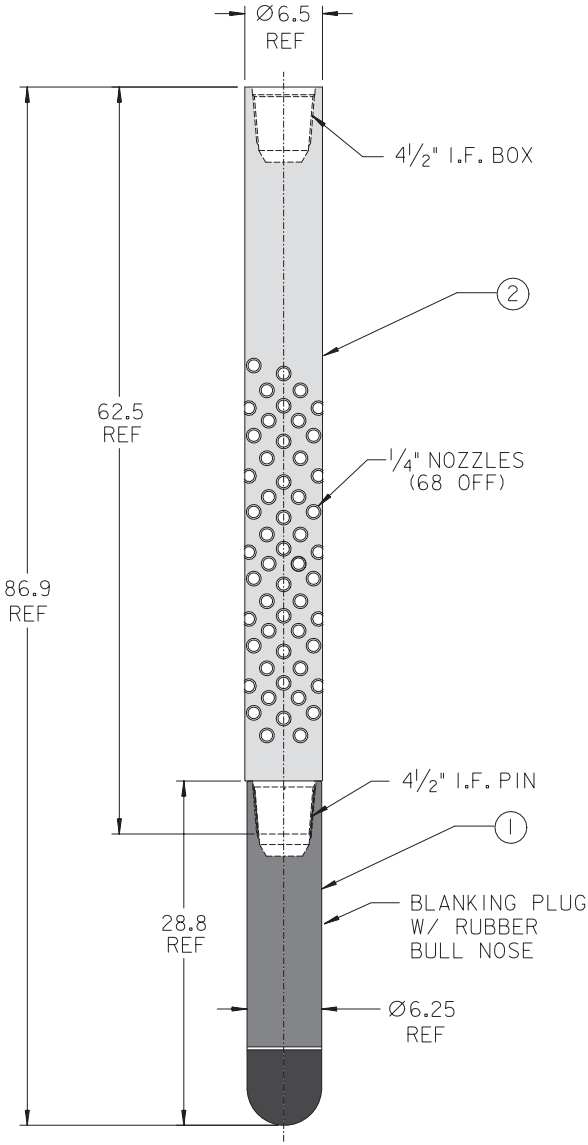

6.22 Wash-out Tool

6.23 Bore Protector Handling Tool

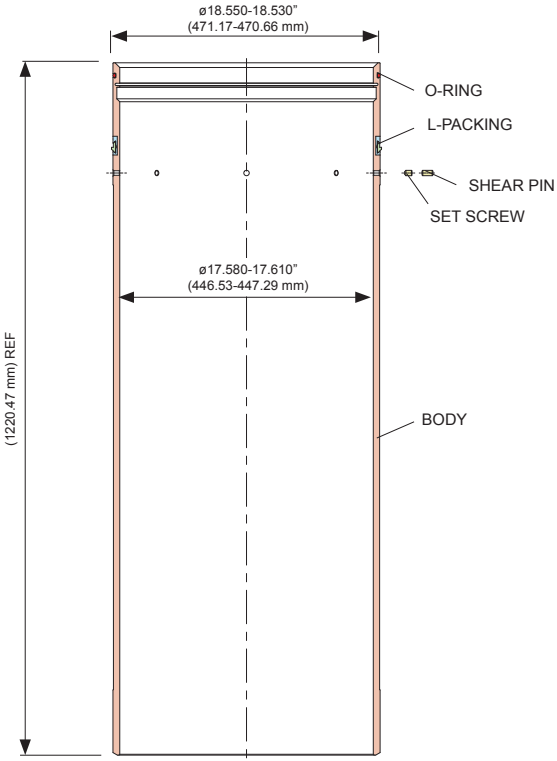

6.24 XT Bore Protector

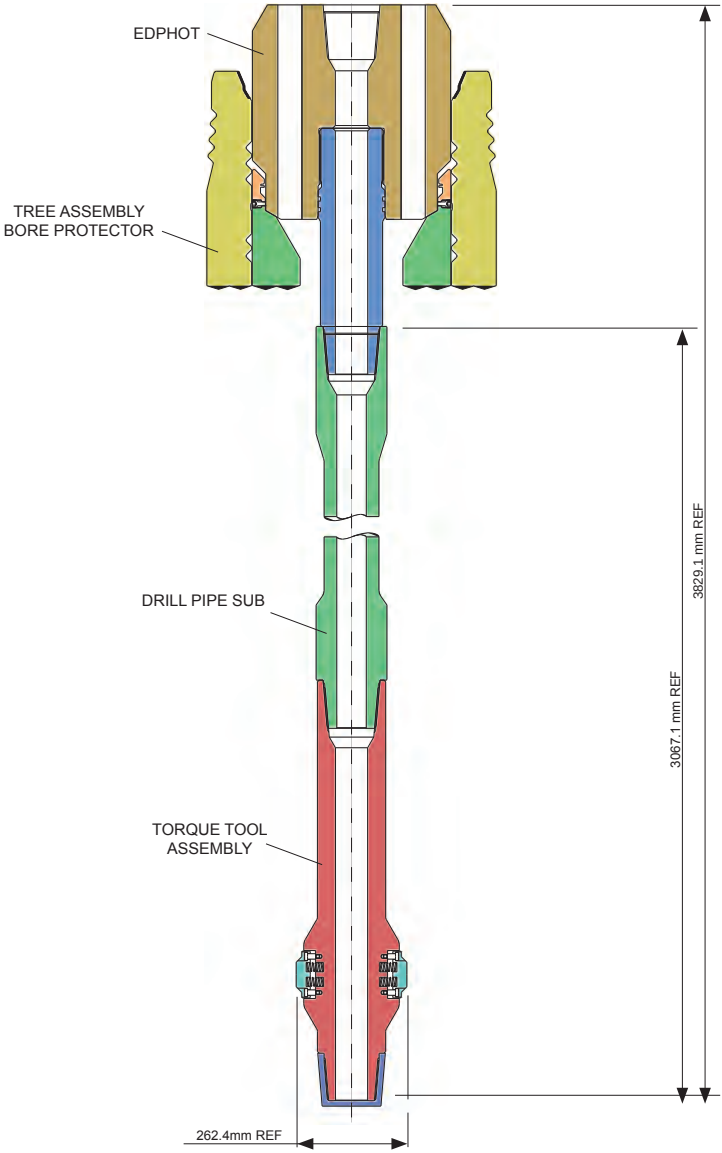

6.25 Ridigizing Tool

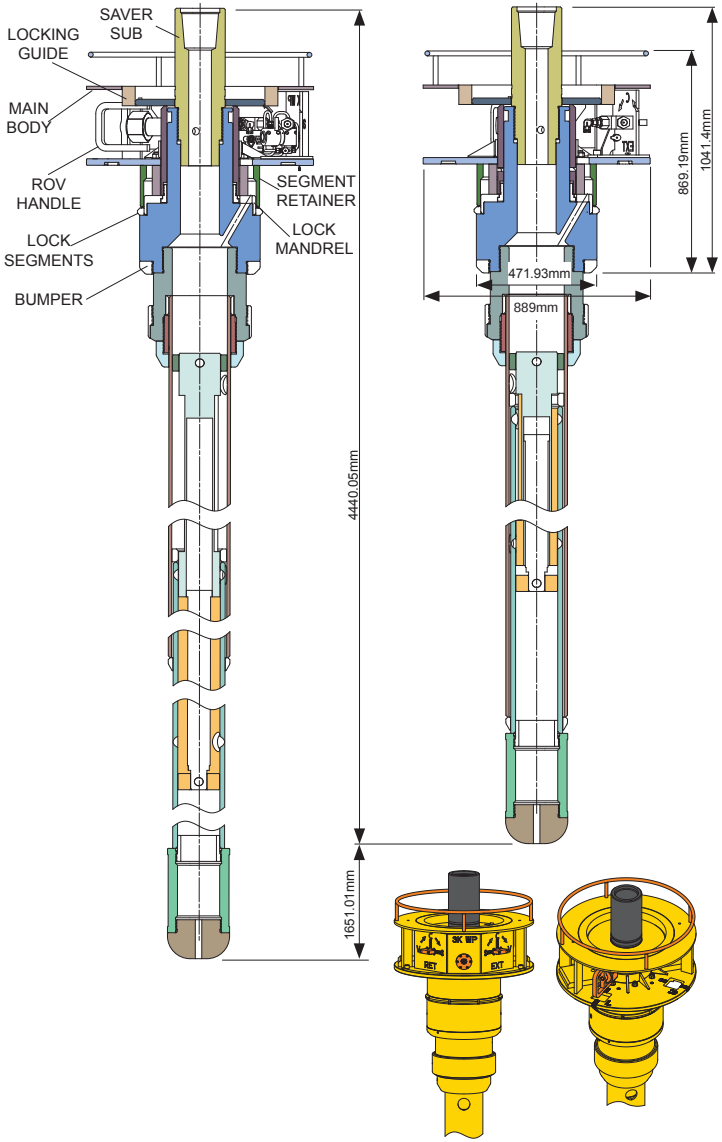

6.26 Tree Running and Retrieval Tool

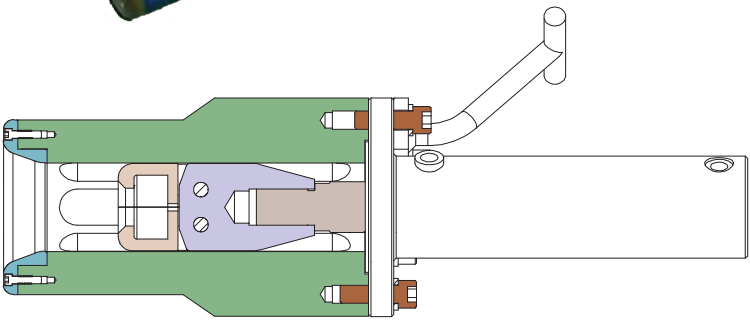

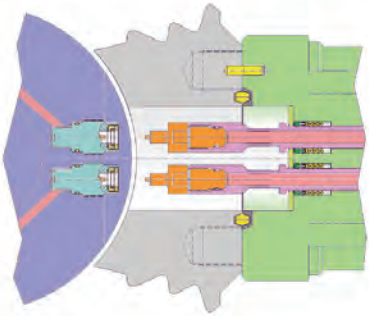

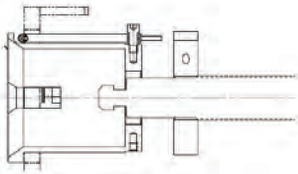

6.27 Penetrator Override Tool

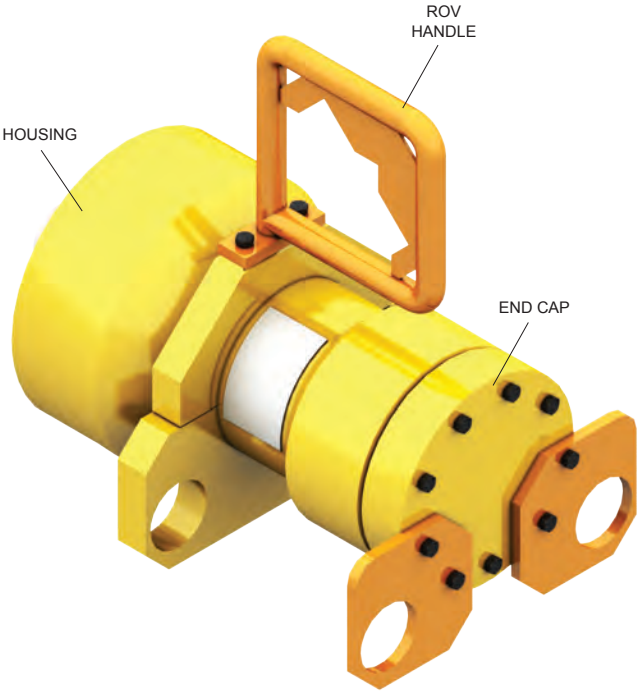

6.28 Linear Actuator Override Tool

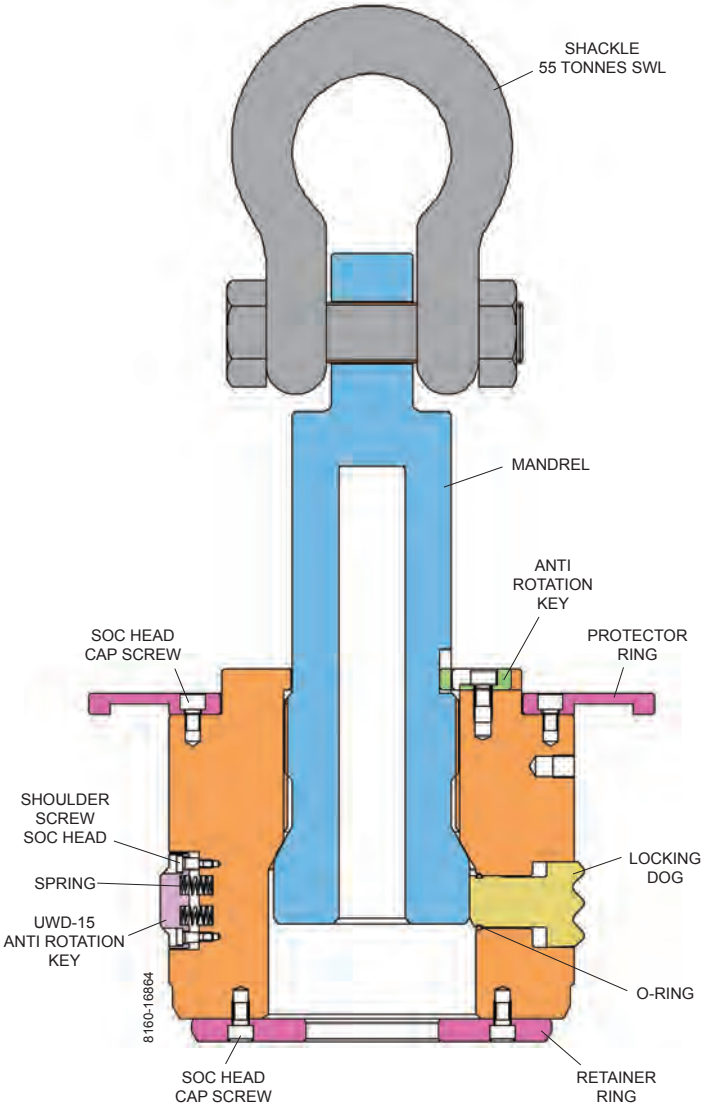

6.29 XT Handling Tool

Tubing Hanger System

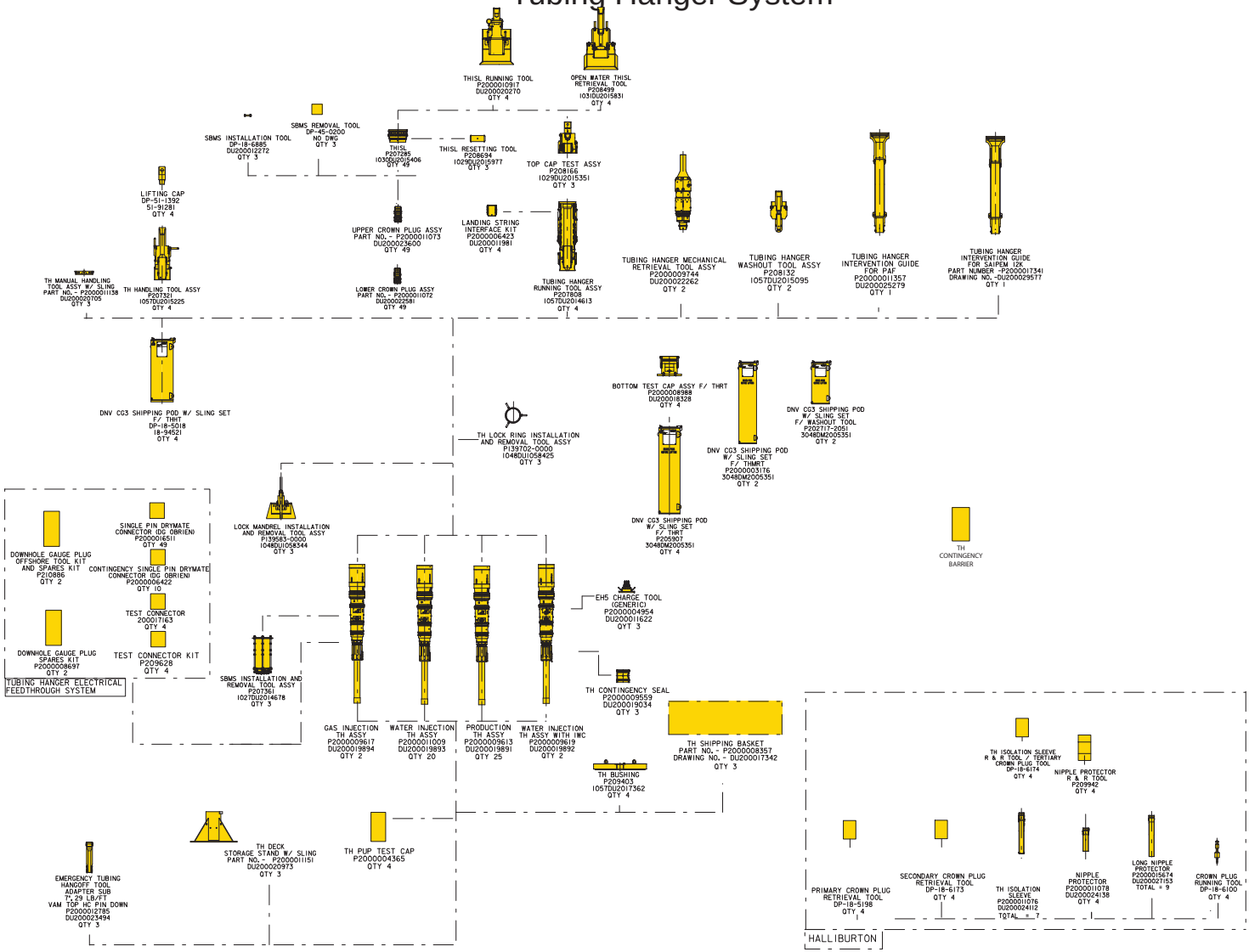

7.1 TH Scope of Supply

REFERENCE IS MADE TO
DM200018305/AO-040-SX-400-1300059

	PROD W/IWC	PROD WO/IWC	INJ W/IWC	INJ WO/IWC	GAS
E1	PTT	PTT	PTT	PTT	PTT
E2	PTT	PLUGGED	PLUGGED	PLUGGED	PLUGGED
H1	CI	CI	PLUGGED	SCSSV	SCSSV
H2	PLUGGED	PLUGGED	PLUGGED	PLUGGED	SCSSV FLUSH
H3	THPT	THPT	THPT	THPT	THPT
H4	IWC1	PLUGGED	IWC1	PLUGGED	PLUGGED
H5	IWC2	PLUGGED	IWC2	PLUGGED	PLUGGED
H6	IWC1/2	PLUGGED	IWC1/2	PLUGGED	PLUGGED
H7	SCSSV	SCSSV	PLUGGED	PLUGGED	PLUGGED
H8	SCSSV FLUSH	SCSSV FLUSH	PLUGGED	PLUGGED	PLUGGED

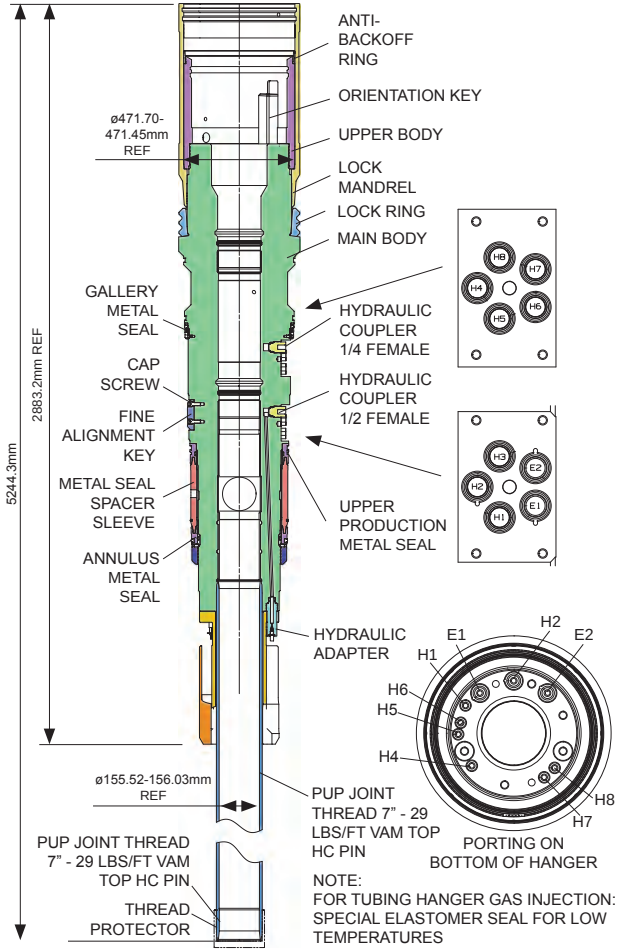

7.2 Tubing Hanger

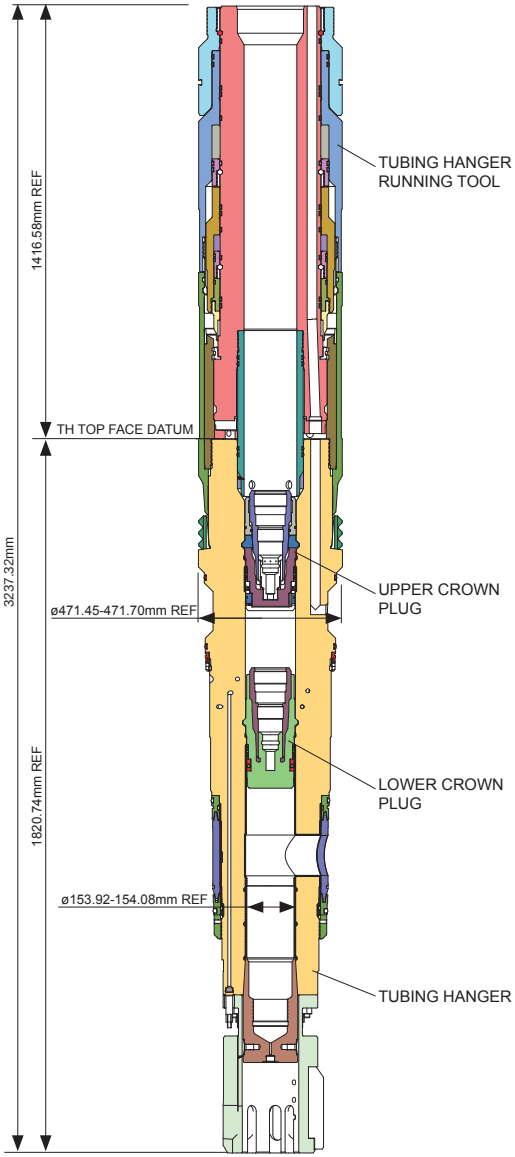

7.3 TH and TH Running Tool

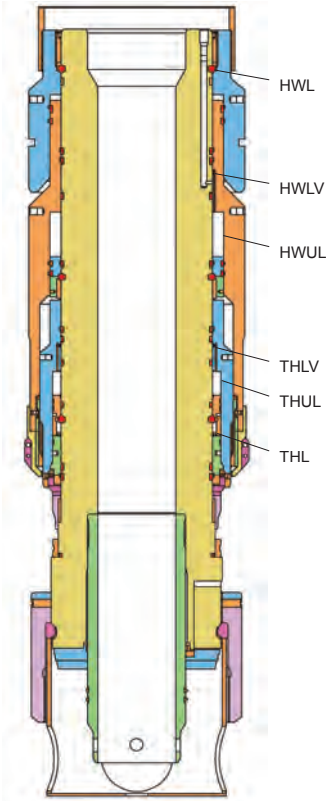

Description of Function	Max Working Pressure	Max Test Pressure
Hanger to Wellhead Lock (HWL)	5,000psi	10,000psi
Hanger to Wellhead Lock Verification (HWLV)	5,000psi	10,000psi
Hanger to Wellhead Unlock (HWUL)	5,000psi	10,000psi
Tool to Hanger Lock (THL)	5,000psi	10,000psi
Tool to Hanger Lock Verification (THLV)	5,000psi	10,000psi
Tool to Hanger Unlock (THUL)	5,000psi	10,000psi
Production Bore	10,000psi	15,000psi

7.4 THRT Hydraulic Functions and Volumes

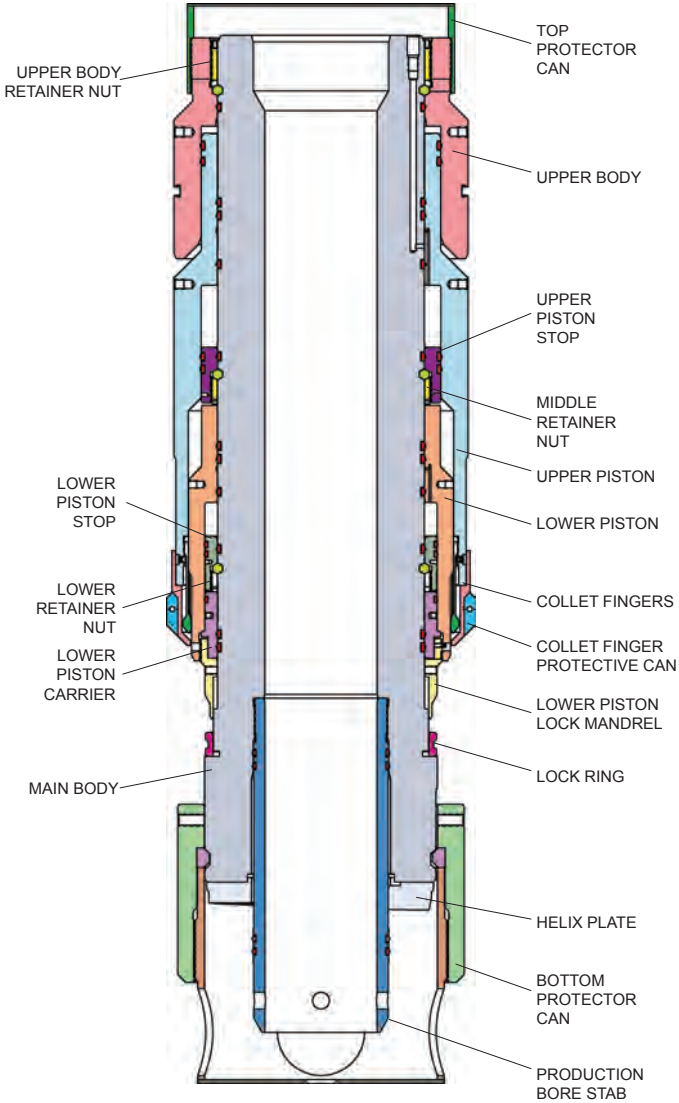

7.5 TH Running/Retrieval Tool

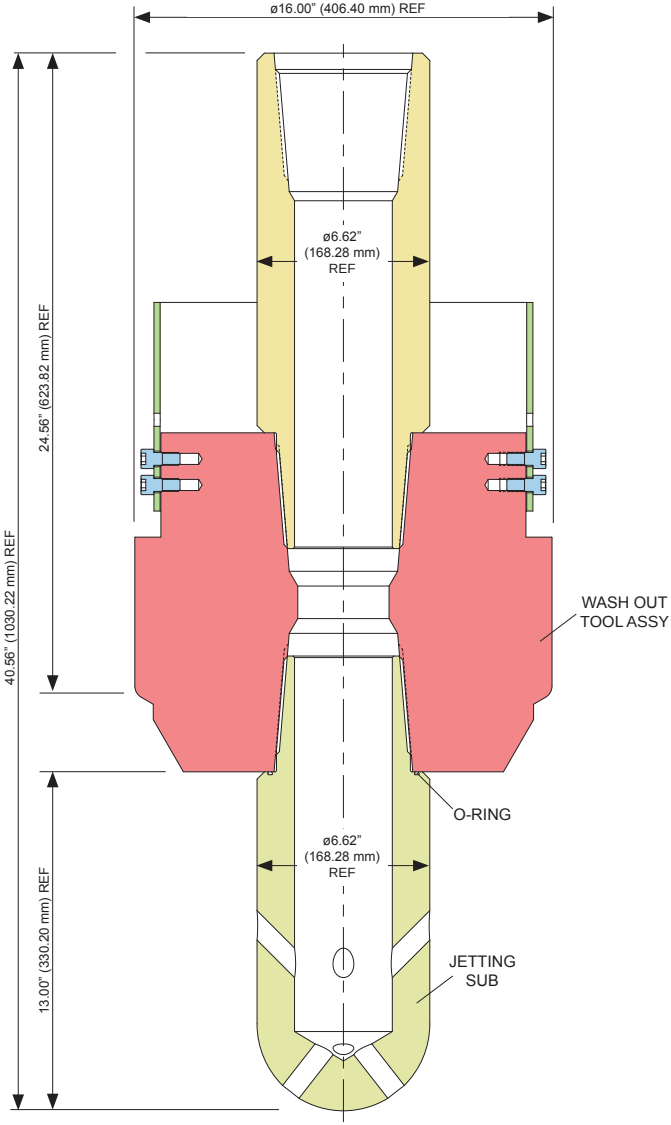

7.6 TH Washout Tool

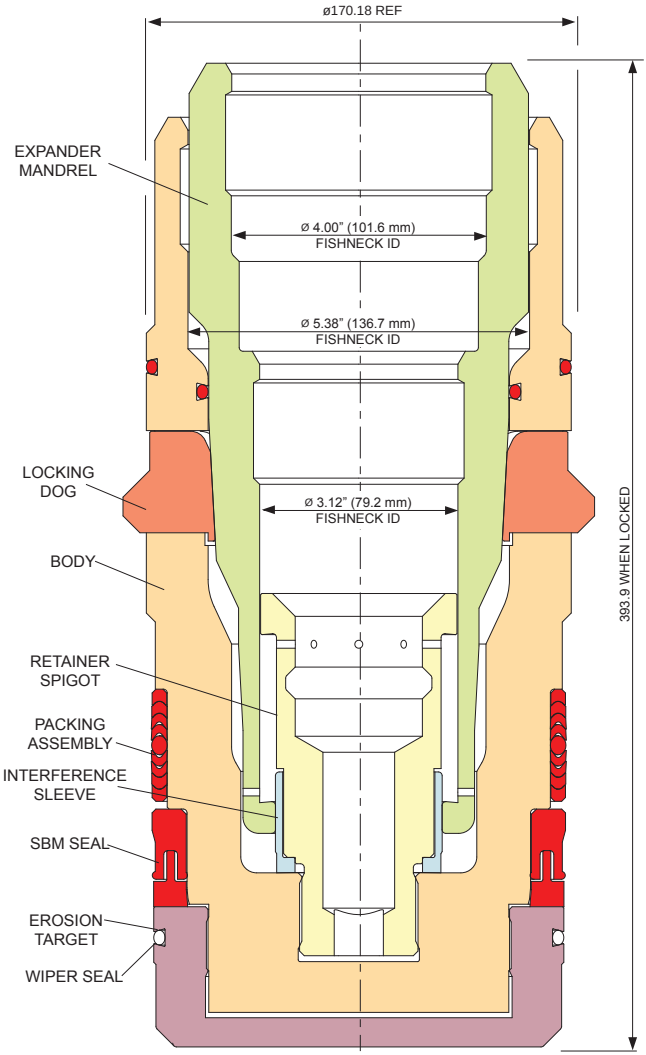

7.7 Lower Crown Plug

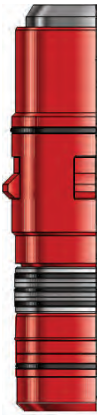

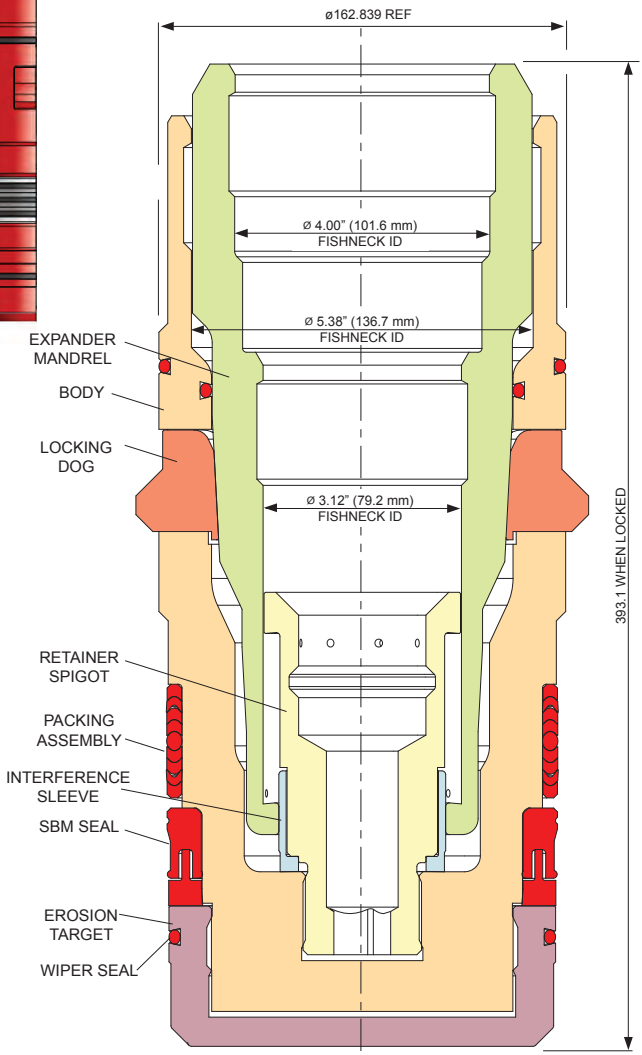

7.8 Upper Crown Plug

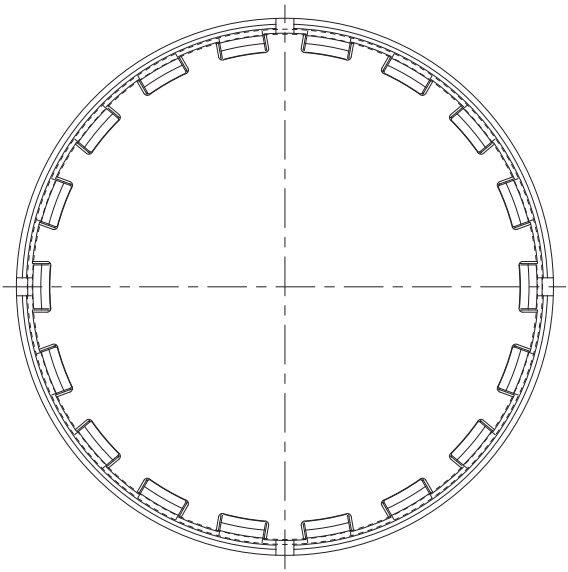

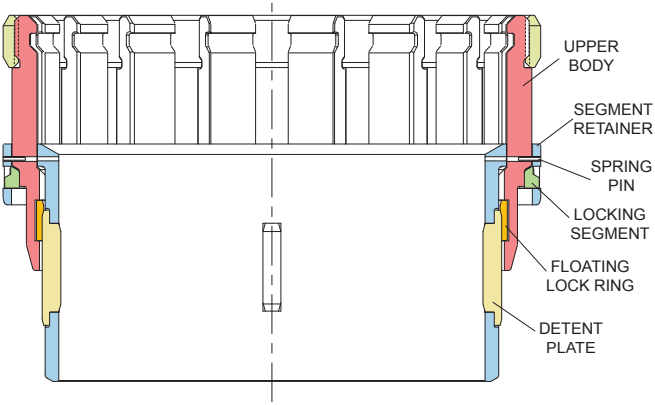

7.9 TH Independent Secondary Lock THISL

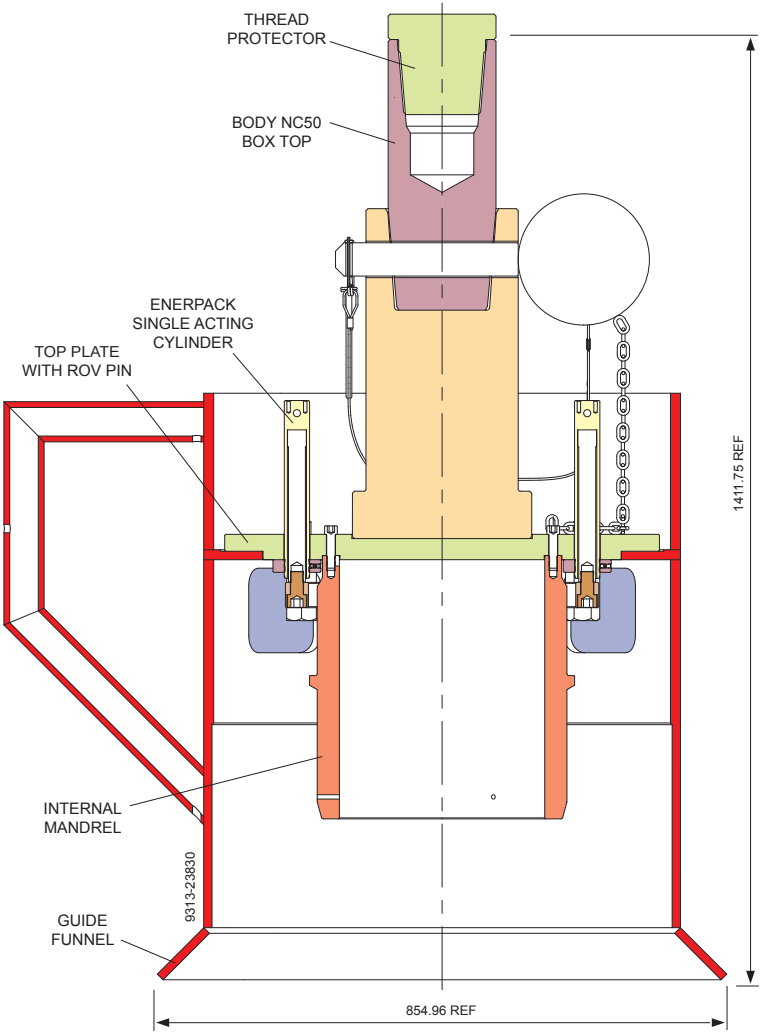

7.10 THISL Running Tool

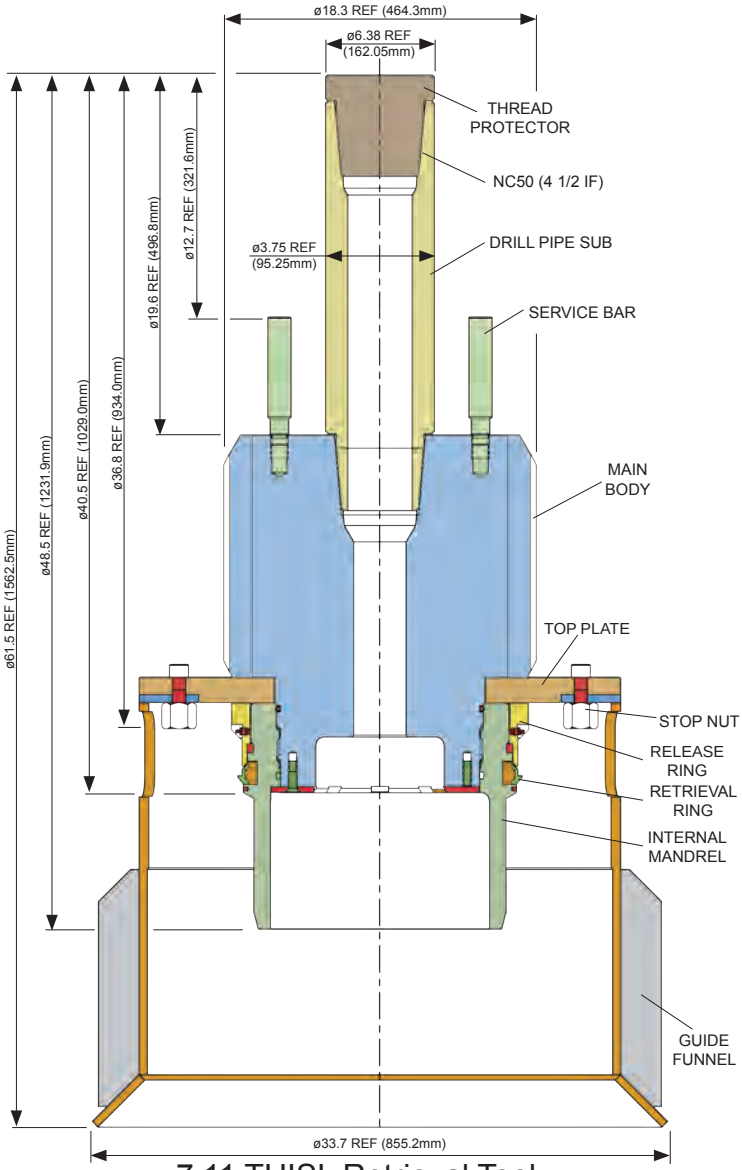

7.11 THISL Retrieval Tool

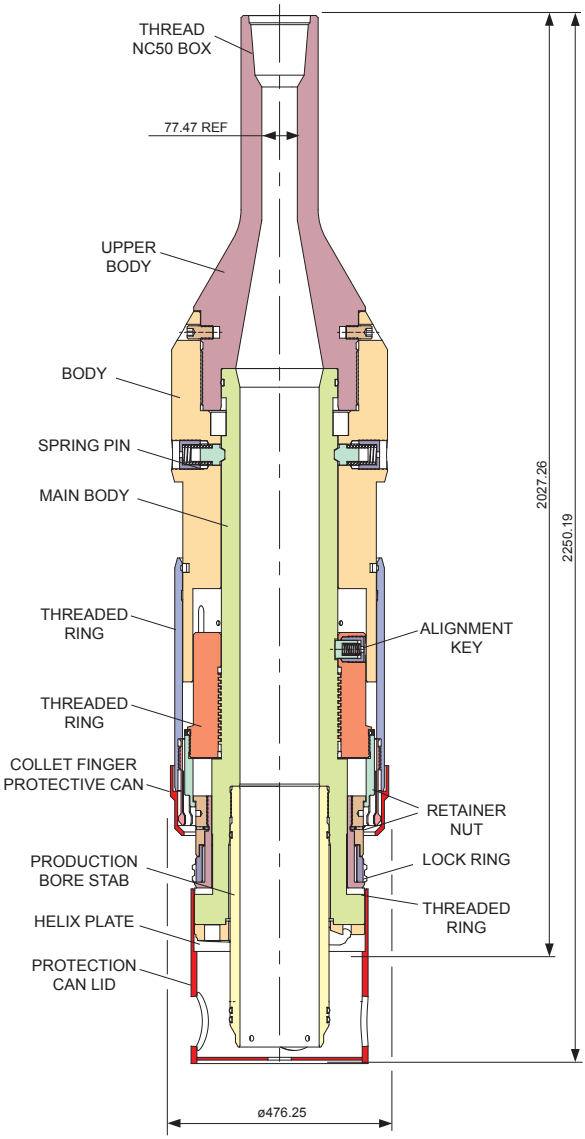

7.12 Mechanical Release Tool for TH

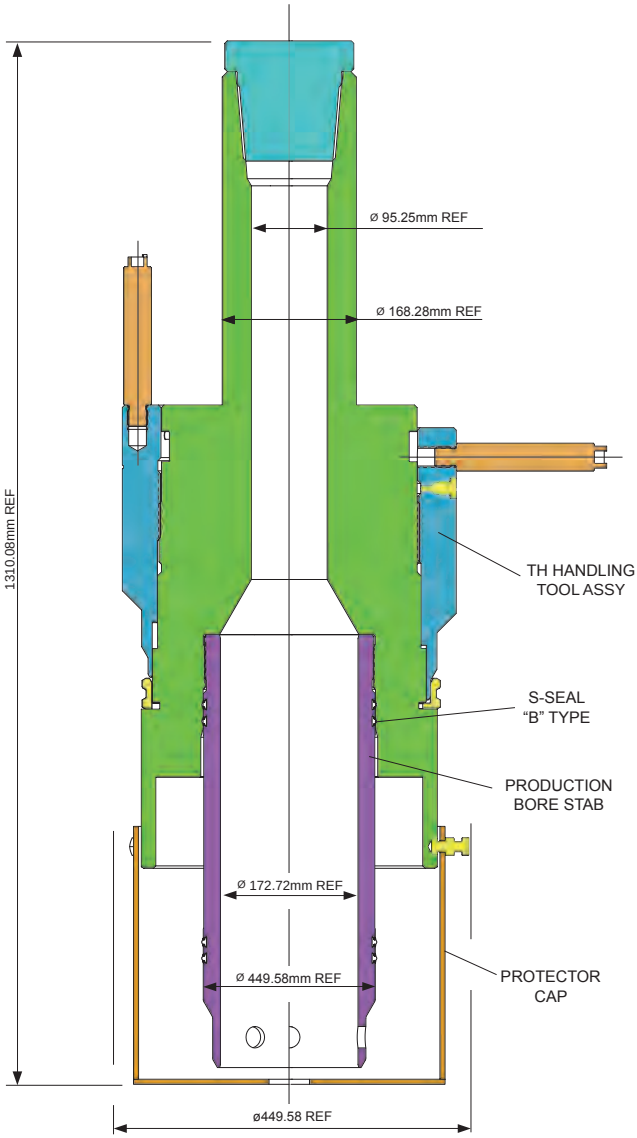

7.13 TH Handling Tool

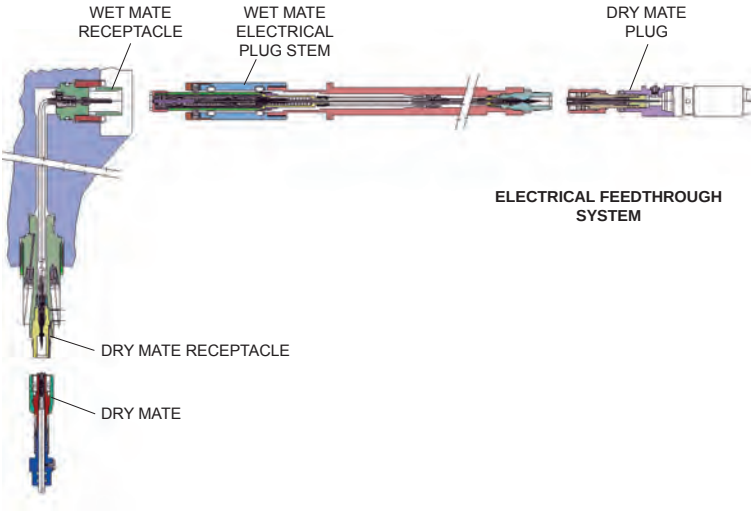

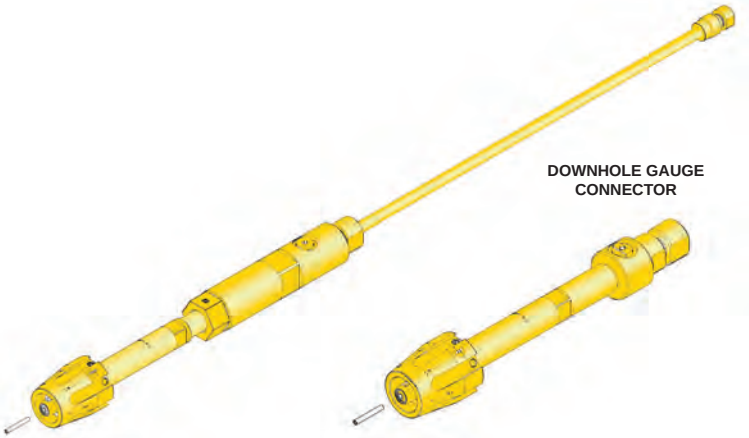

7.14 Downhole Gauge Connectors and Electrical Feedthrough System

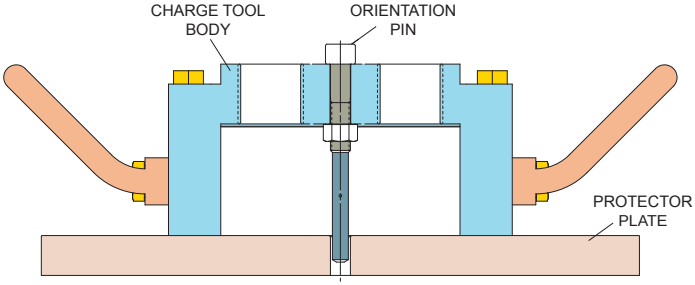

SECTION A - A

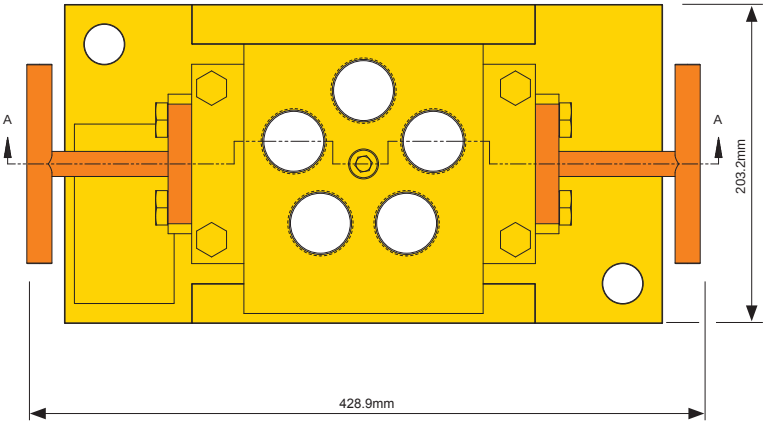

7.15 Penetrator Charge Tool

8 Workover System

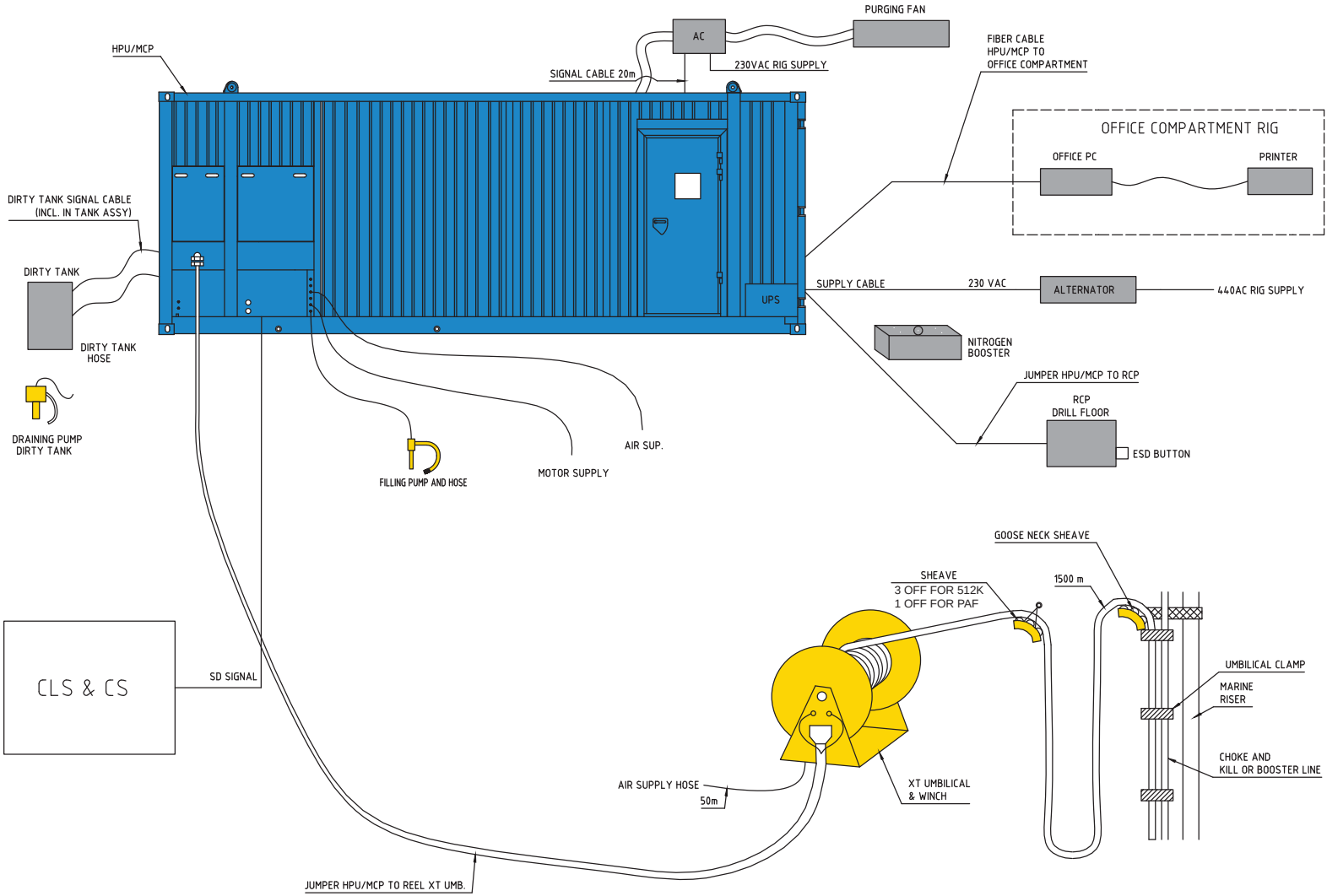

8.1 WOCS, Scope of Supply

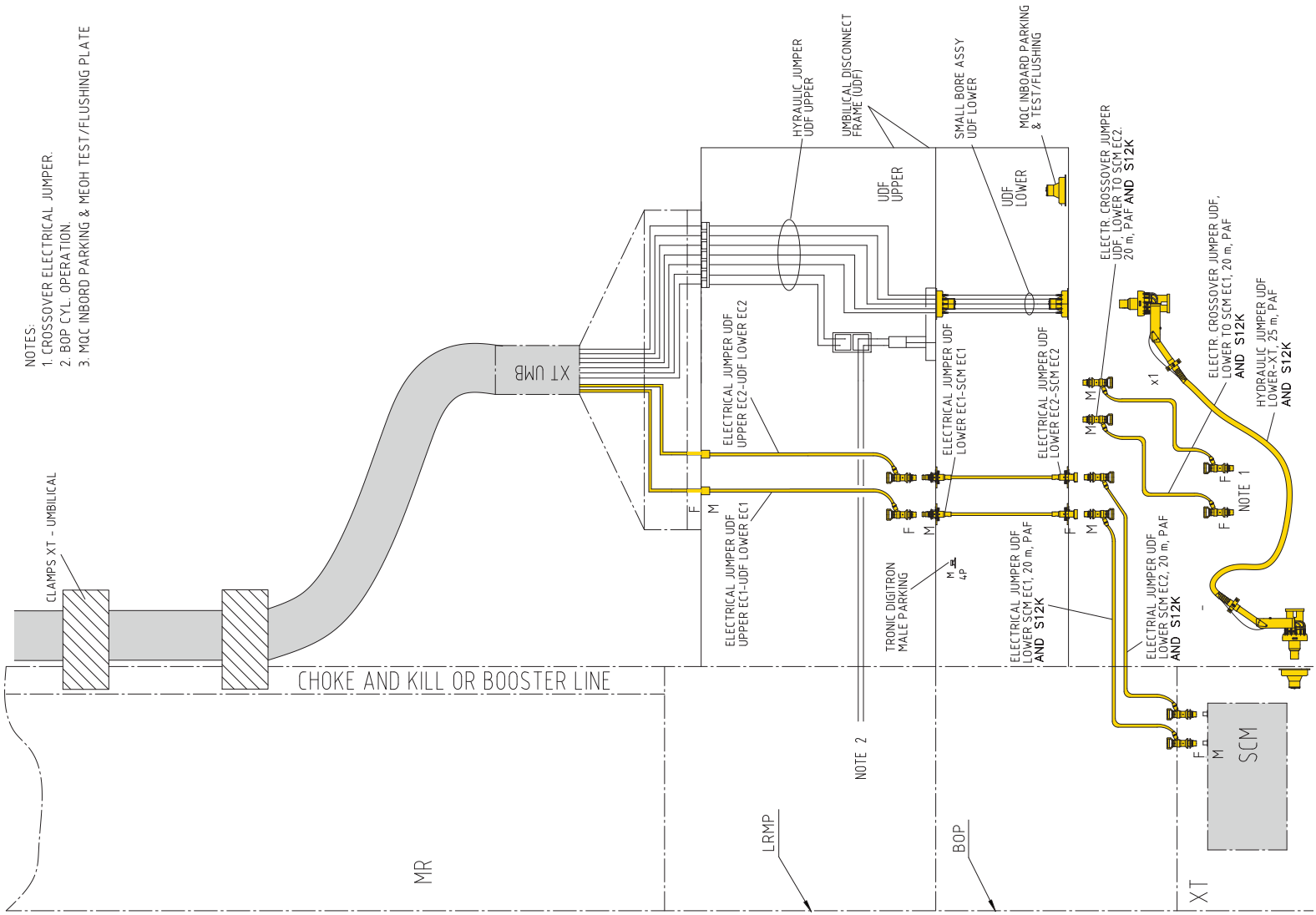

8.2 WOCS, Scope of Supply

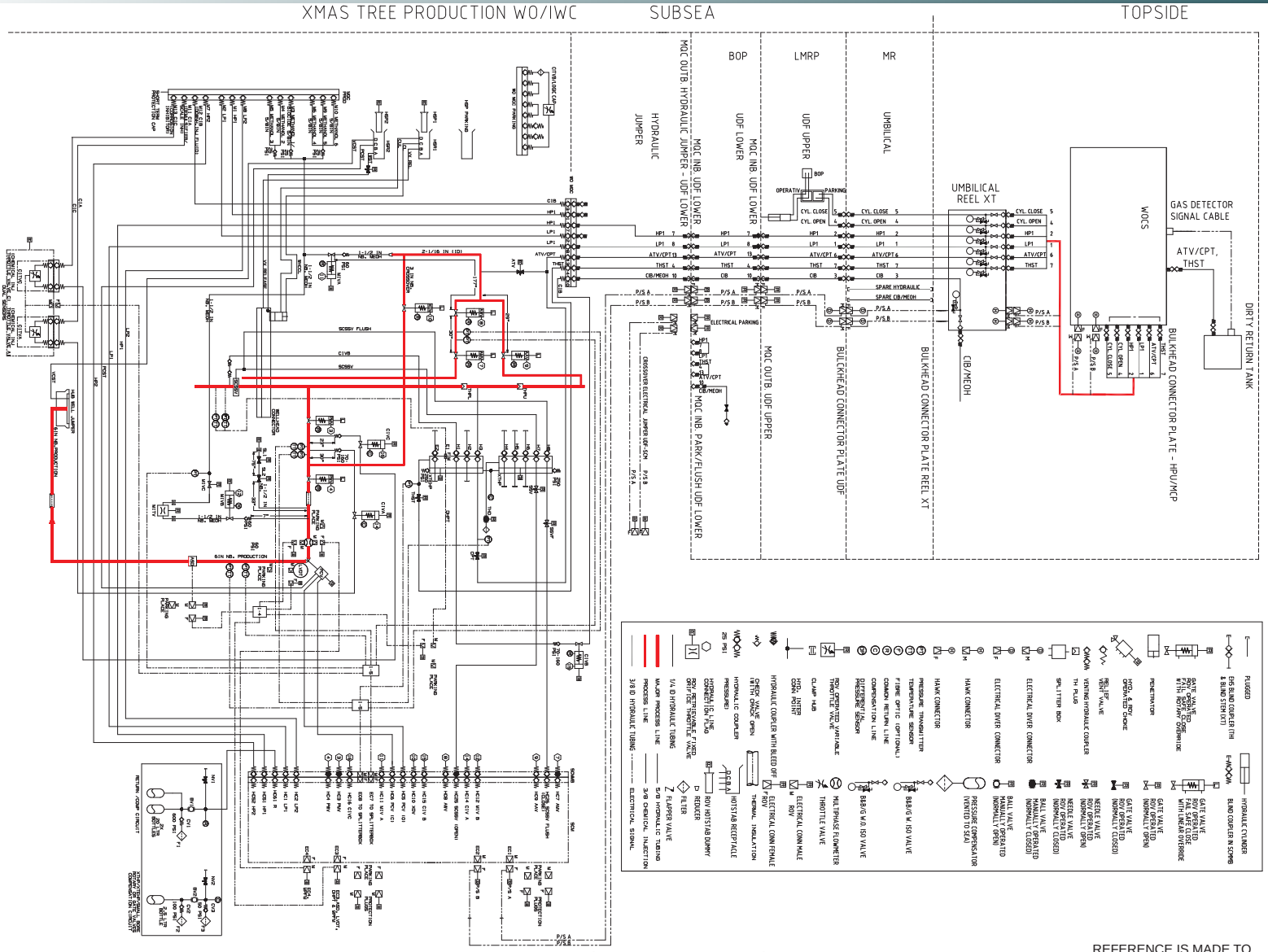

8.3 WOCS layout, TH mode

REFERENCE IS MADE TO DA600039772/AO-040-SX-400-130828

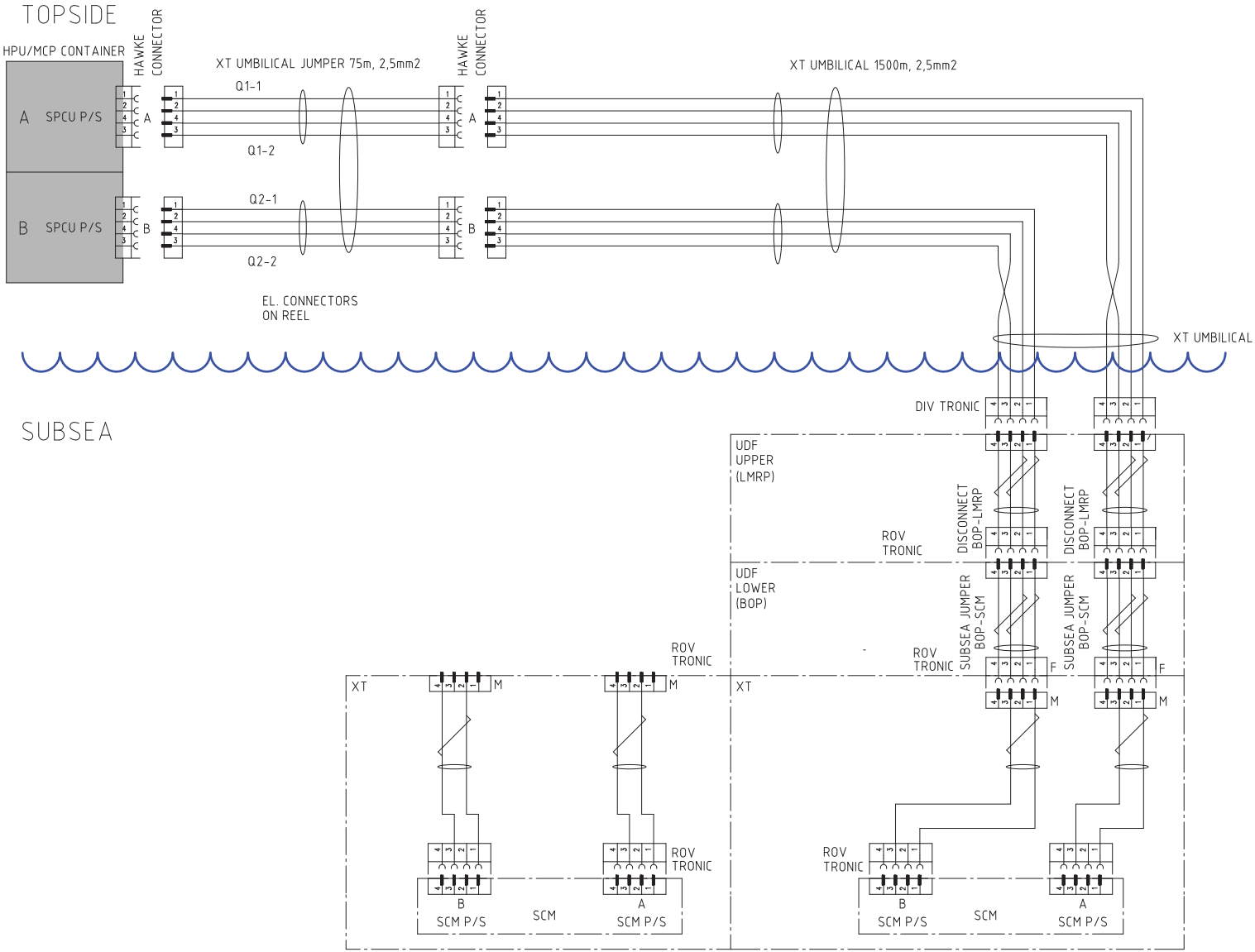

8.4 WOCS Schematic, TH Mode

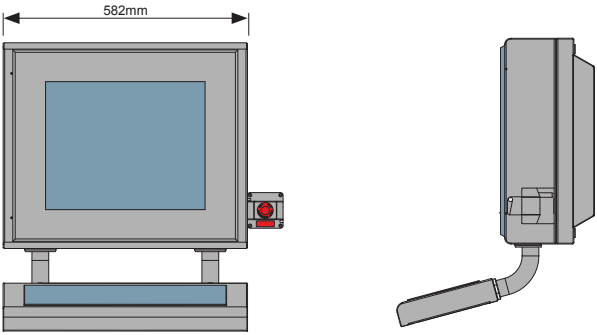

PEDESTAL UNIT

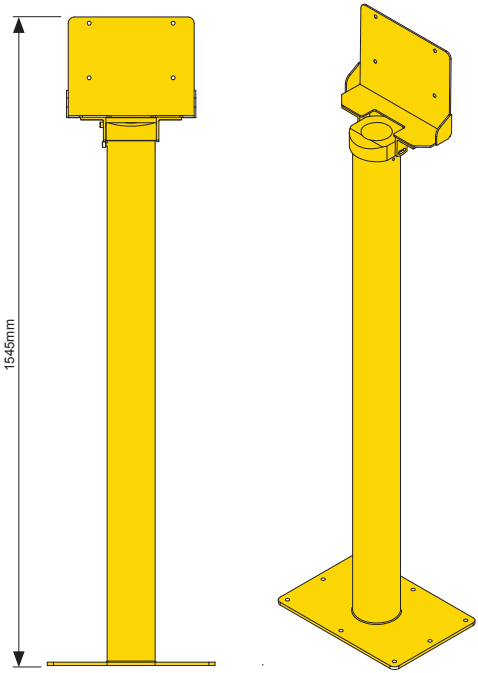

8.5 Shutdown panels

ESD SEQUENCE TIME DIAGRAM PXT WO IWC NWL - MODE

PWV							
CT= 28.4s							
2s delay	PMV CT= 27.6 s						
4s delay		AMV					
		CT=11.7s					
6s delay			AWV				
			CT=7.4s				
8s delay				XOV			
				CT=8.3s			
10s delay					AAV		
					CT= 7.2s		
12s delay					MIV A		
					CT=4.5s		
14s delay					MIV B		
					CT=5.5s		
16s delay					CIV A		
					CT=5.5s		
18s delay					CIV B		
					CT=5.5s		
20s delay					CIV C		
					CT=5.5s		
30s delay							SCSSV CT=5s
Total ESD CT (Closing Time): 29.6 sec							

ESD SEQUENCE TIME DIAGRAM PXT WO IWC WL - MODE

PWV						
CT= 28.4s						
2s delay	PMV CT= 27.6 s					
4s delay		AMV				
		CT=11.7s				
6s delay			AWV			
			CT=7.4s			
8s delay				XOV		
				CT=8.3s		
10s delay					AAV	
					CT= 7.2s	
12s delay					MIV A	
					CT=4.5s	
14s delay					MIV B	
					CT=5.5s	
16s delay					CIV A	
					CT=5.5s	
18s delay					CIV B	
					CT=5.5s	
20s delay					CIV C	
					CT=5.5s	
Total ESD CT (Closing Time): 29.6 sec						

8.6 Shutdown sequences

ESD SEQUENCE TIME DIAGRAM IXT W IWC NWL/WL - MODE

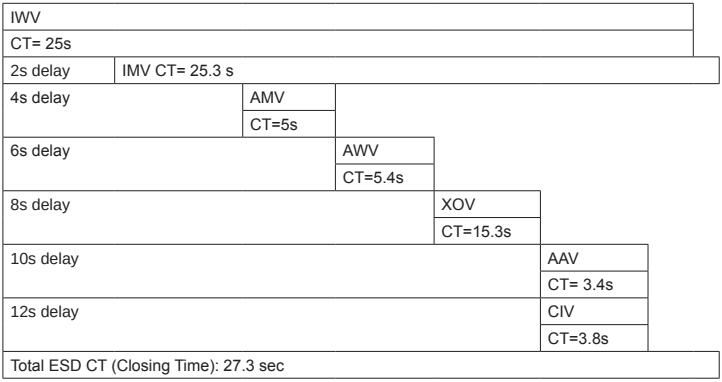

ESD SEQUENCE TIME DIAGRAM IXT WO IWC WL - MODE

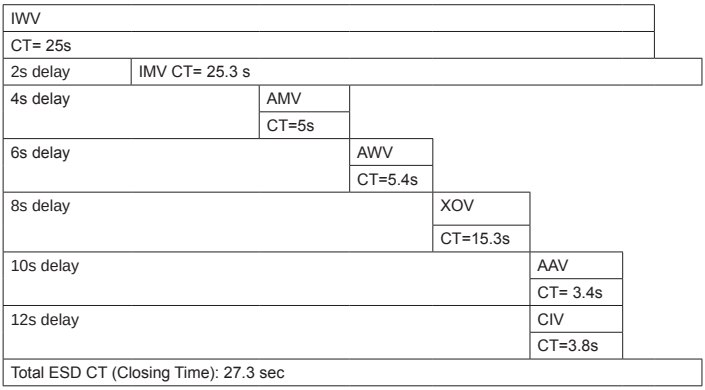

ESD SEQUENCE TIME DIAGRAM IXT WO IWC AND GXT NWL - MODE

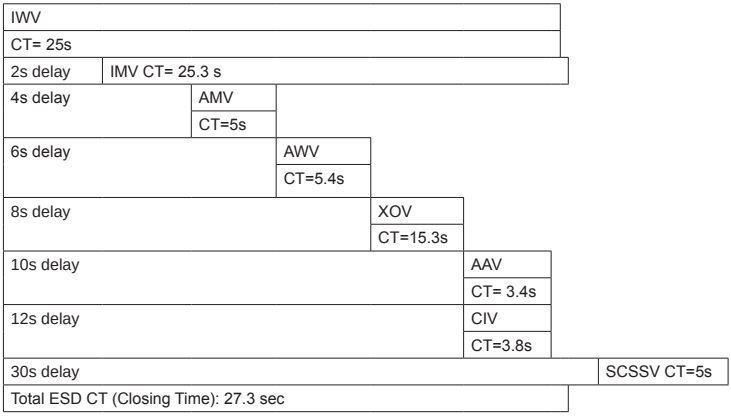

ESD SEQUENCE TIME DIAGRAM GXT WL - MODE

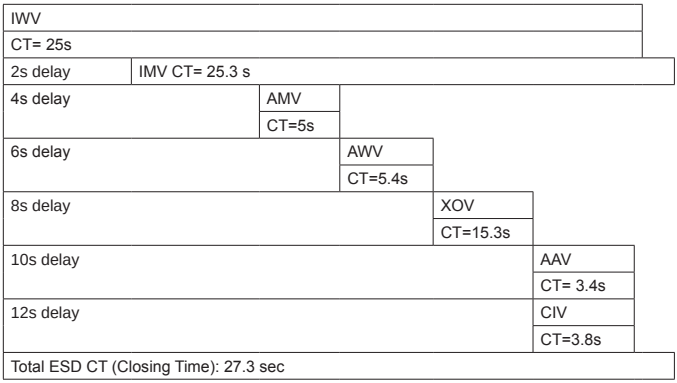

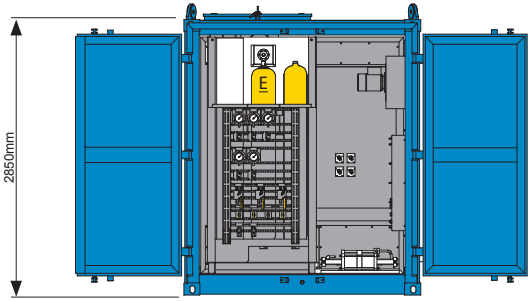

LEFT SIDE VIEW SHOWN WITH OPEN DOORS

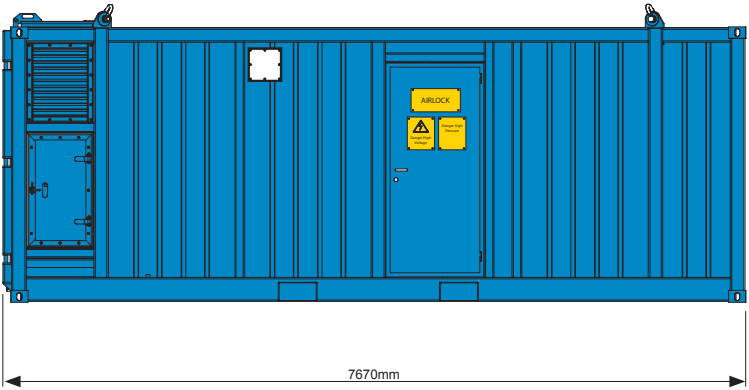

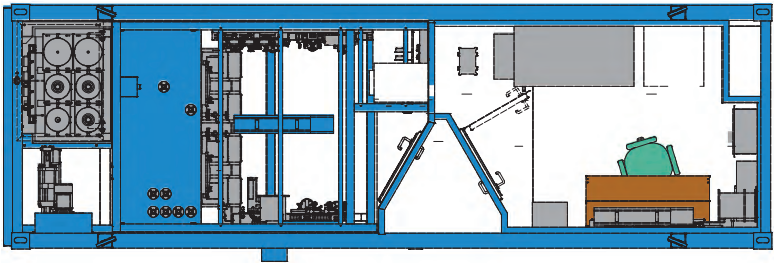

TOP VIEW SHOWN WITHOUT ROOF

8.7 WOCS

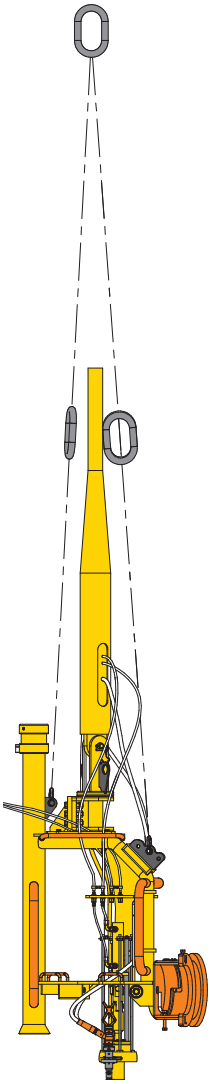

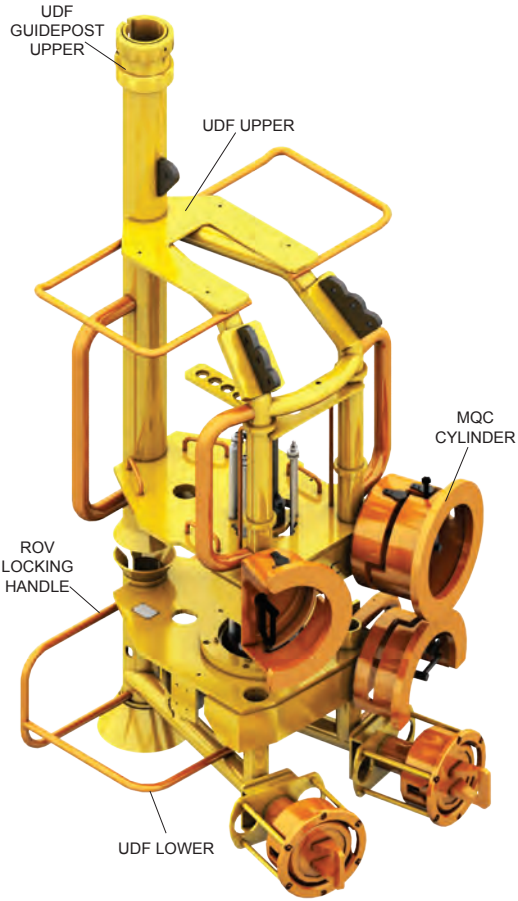
UDF
GUIDEPOST
UPPER
UDF UPPER
MQC
CYLINDER
ROV
LOCKING
HANDLE
UDF LOWER

8.8 UDF

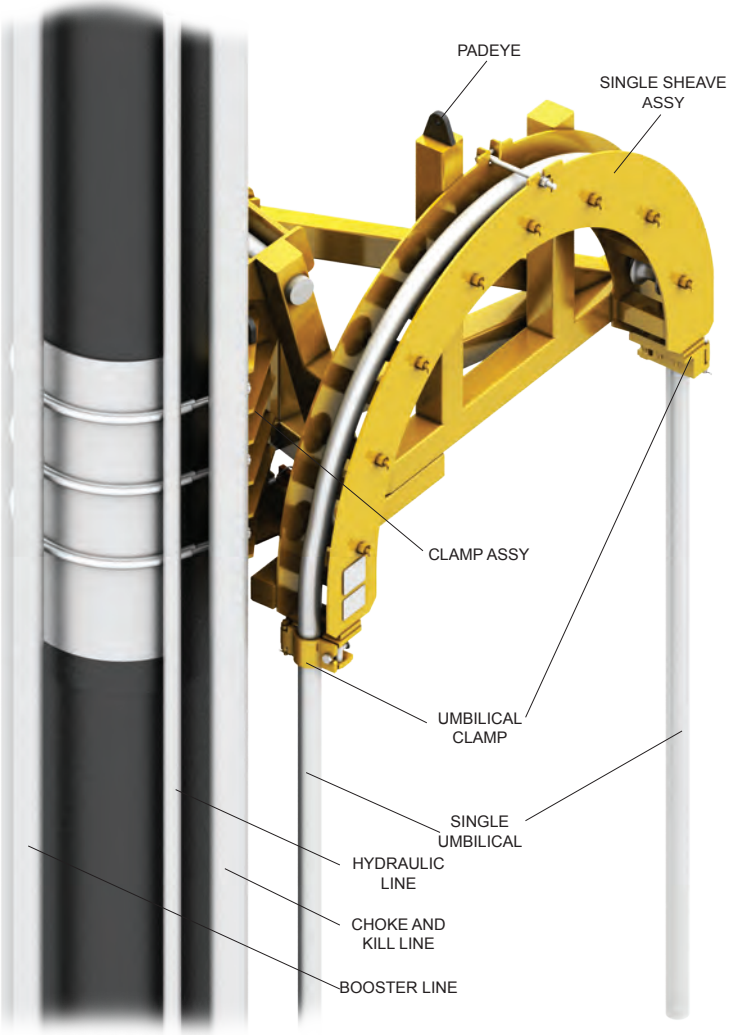

8.9 Gooseneck

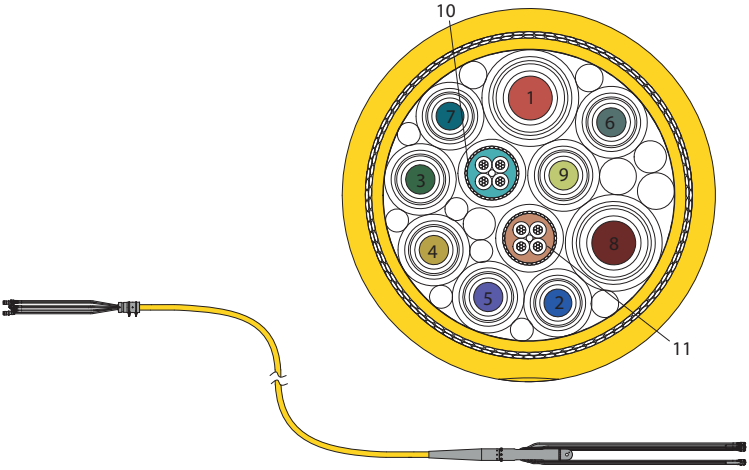

Line no.	No. off	Hose/Cable/Tube Type	Bore Size	max Working press. or Voltage/Wave	line Function	Shipping Fluid
1	1	6H10	3/8”	10.000psi	LP Supply	Transaqua HT
2	1	4H10	1/4”	10.000psi	HP Supply	Transaqua HT
3	1	4H10	1/4”	10.000psi	Methanol	Water Glycol 50/50 Mix
4	1	4H10	1/4”	10.000psi	MQC Open	Transaqua HT
5	1	4H10	1/4”	10.000psi	MQC Close	Transaqua HT
6	1	4H10	1/4”	10.000psi	ATV/CPT	Transaqua HT
7	1	4H10	1/4”	10.000psi	THST	Transaqua HT
8	1	6H10	3/4”	10.000psi	Hydraulic Spare	Transaqua HT
9	1	4H10	1/4”	10.000psi	Methanol Spare	Transaqua HT
Q1-Red (10)	1	2.5mm sq. T.Q.B	N/A	0.6/1.0/(1.2)kV	Signal/Power	N/A
Q2-Blue (11)	1	2.5mm sq. T.Q.B	N/A	0.6/1.0/(1.2)kV	Signal/Power	N/A

8.10 Umbilical Reel System, OMUK System

UMBILICAL DATA		
UMBILICAL LENGTH	1500	m
OUTSIDE DIAMETER	81	mm+/-2mm
OUTER SHEATH MATERIAL	FRTPR	
OUTER SHEATH COLOR	YELLOW	
SHEATH REINFORCEMENT MATERIAL	ARAMID FIBRE	
STATIC MINIMUM BEND RADIUS	760	mm
DYNAMIC MINIMUM BEND RADIUS	975	mm
WEIGHT IN AIR(FILLED)	5900	kg/km
WEIGHT IN SEAWATER (FLOO-DED/FILLED)	1150	kg/km
CALCULATED UMBILICAL MAX BREAKLOAD	250	kN
UMBILICAL MINIMUM BRE-AKLOAD	175	kN
UMBILICAL MAX SWL	20	kN
TERMINATED UMBILICAL MIN BREAKLOAD	80	kN
TERMINATED UMBILICAL MAX SWL	20	kN
OPERATING TEMP	-15 to + 70	deg C
STORAGE TEMP	-15 to + 70	deg C

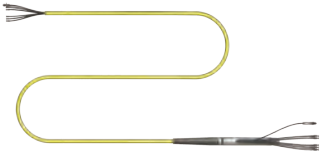

Line no.	Hose P/N	NB	OD (mm)	MWP (mm)
1	UA6906LKN/1	3/8”	17.6	10.000
2	UA6904LKN	1/4”	12.8	10.000
3	2340N-04V91	1/4”	12.5	10.000
4	UA6904LKN	1/4”	12.8	10.000
5	UA6904LKN	1/4”	12.8	10.000
6	UA6904LKN	1/4”	12.8	10.000
7	UA6904LKN	1/4”	12.8	10.000
8	UA6906LKN/1	3/8”	17.6	10.000
9	2340N-04V91	1/4”	12.5	10.000

8.11 Umbilical Reel System, JDR System

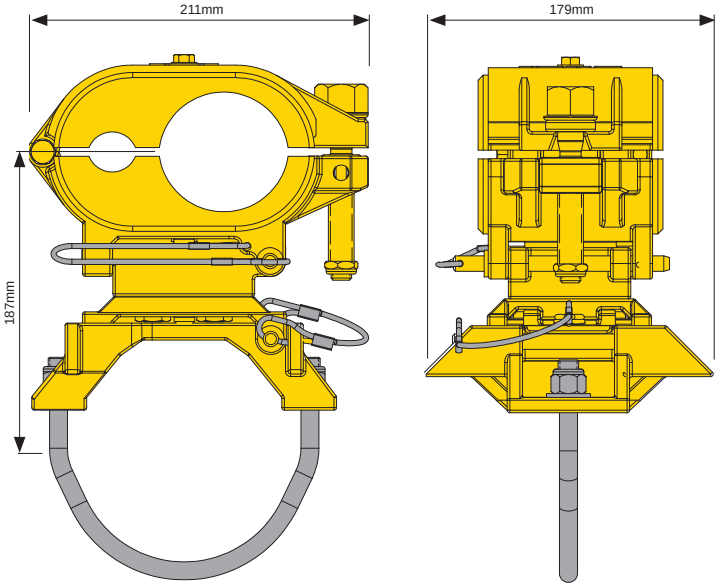

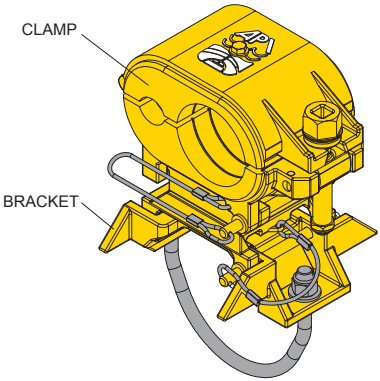

8.12 3” HSDW Clamp

9 Manifold System

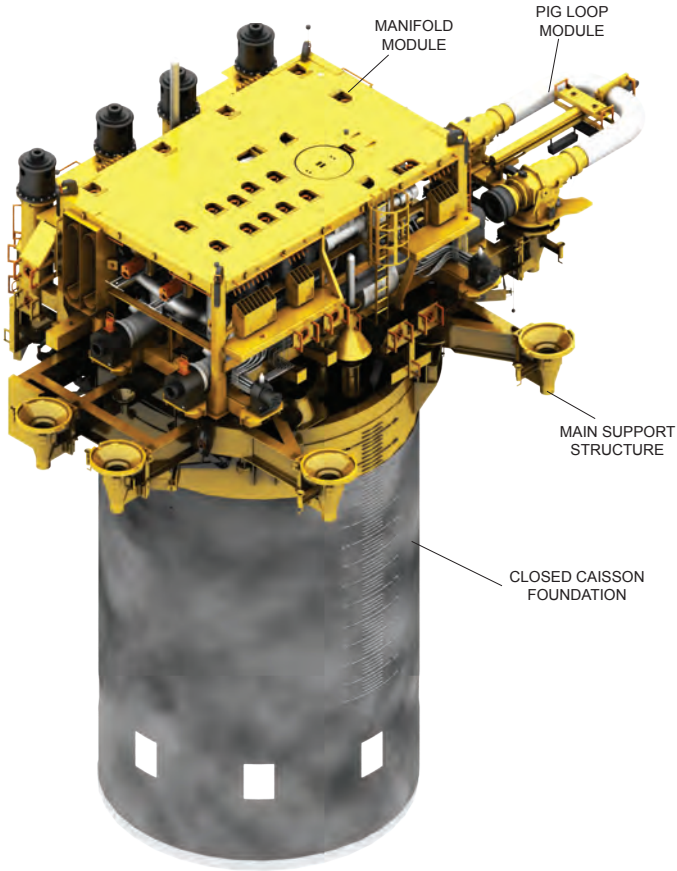

9.1 Oligocene Manifold description

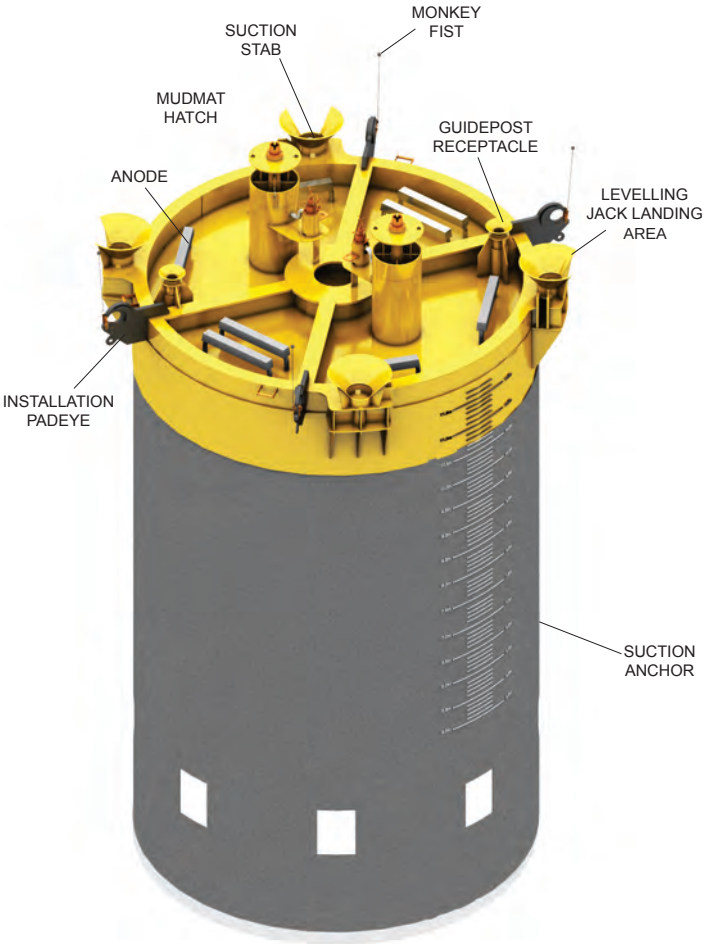

9.2 Oligocene Closed Caisson Foundation

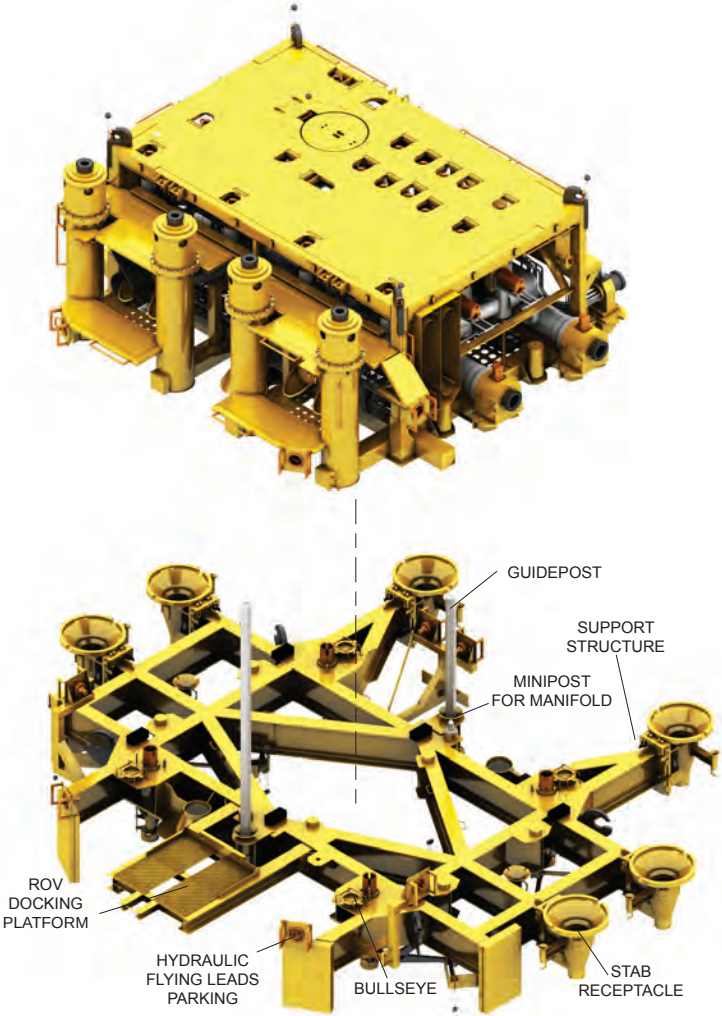

9.3 Oligocene Foundation Manifold Support Structure

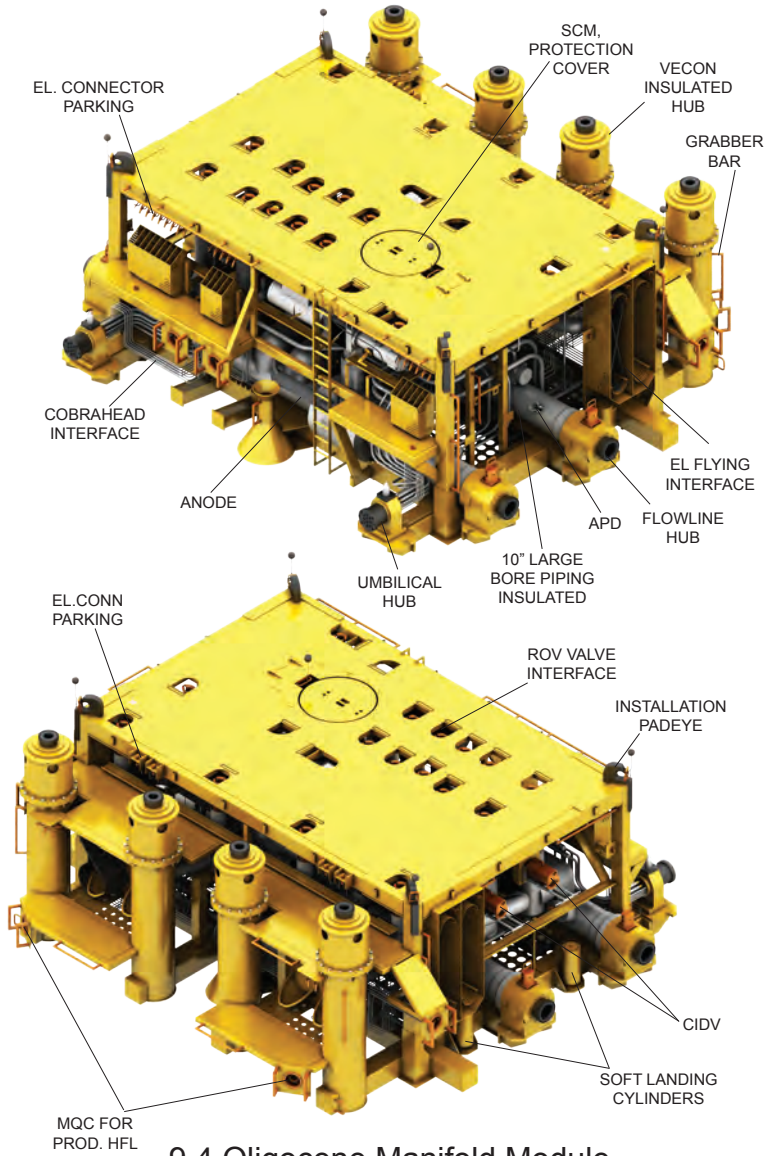

9.4 Oligocene Manifold Module

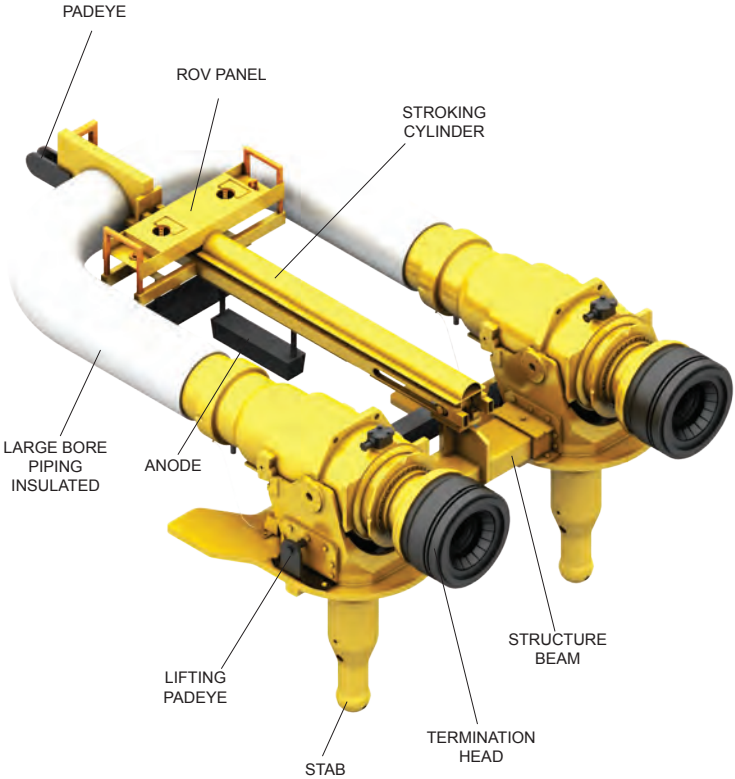

9.5 Oligocene Pig Loop Module

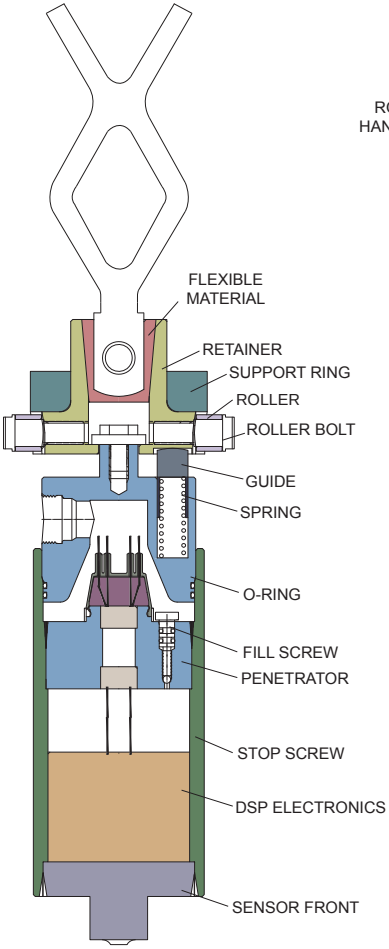

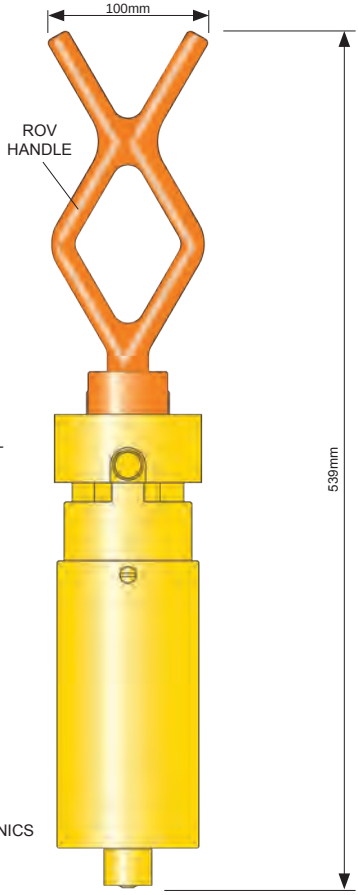

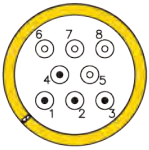

9.6 Acoustic pig detector

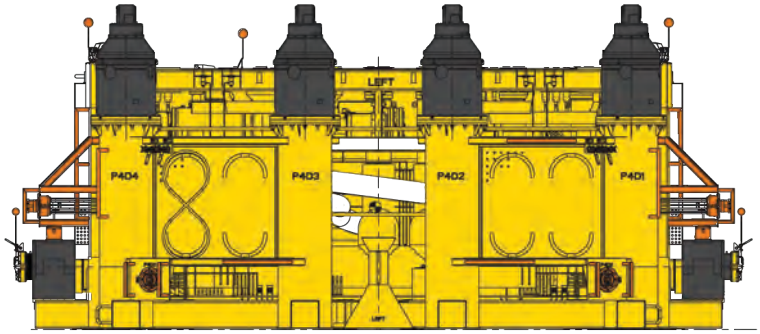

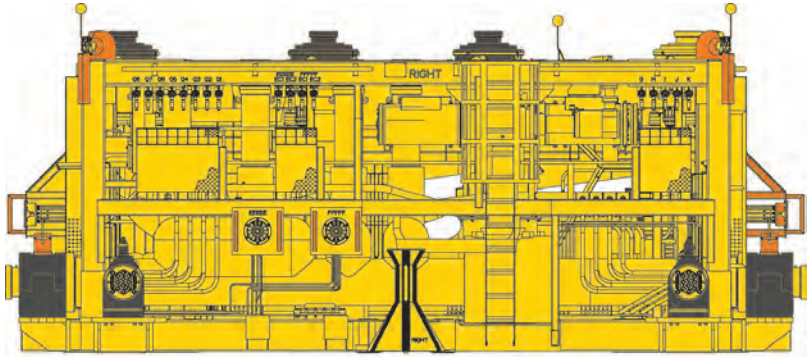

NOTE: HP CAP SPECIFIC TO M43

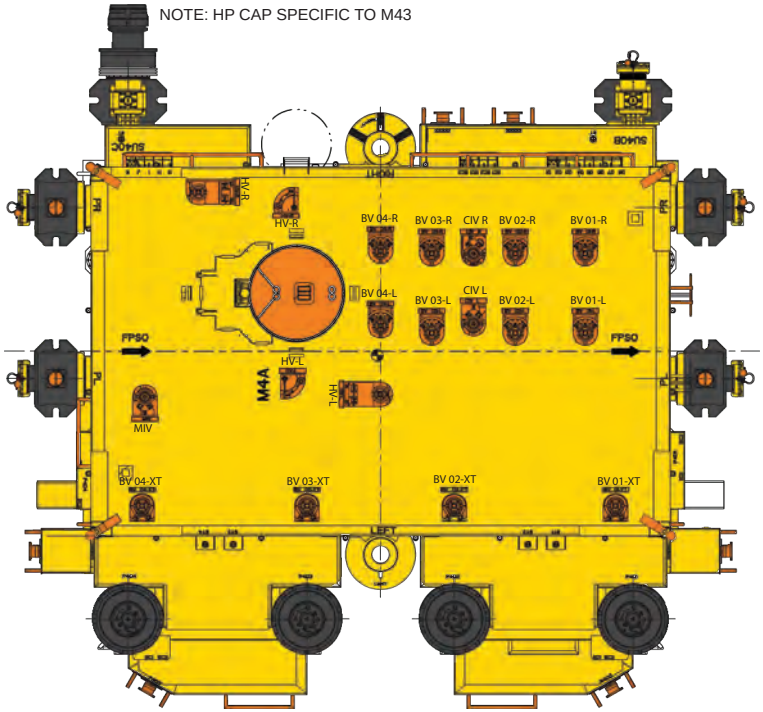

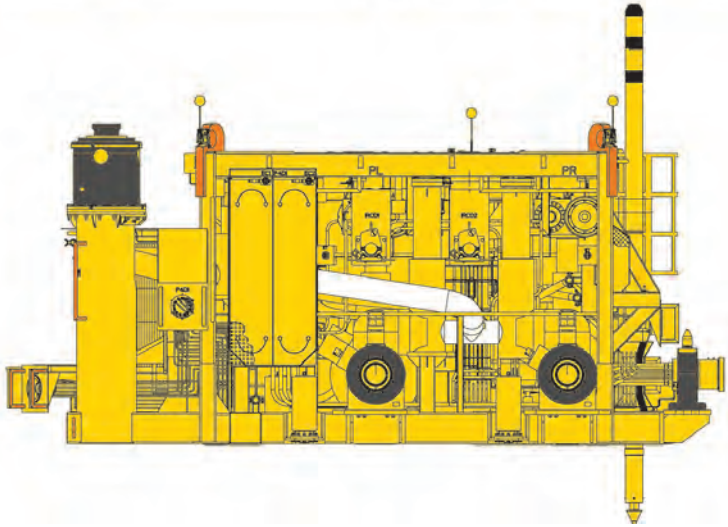

Valve description	P/N	Acc. Torque	Acc. pressure to open or close valve	No. of turns from open to closed
10” ID Ball Valve, w/FSO Act.	P6000041817	1800Nm	160 Bar	72
5 1/8” Gate Valve, w/FSC Act.	P6000041816	1800Nm	160 Bar	47
5 1/8” Gate Valve, w/FSO Act.	P6000041815	1800Nm	160 Bar	47
5 1/8” Gate Valve, ROV Operated	P6000028145	N/A	N/A	17.25
2” Check Valve	P6000040056	N/A	N/A	N/A
1” Gate Valve, w/FSC Actuator	P6000053096	210Nm	140Bar	N/A

9.7 Oligocene Manifold Marking

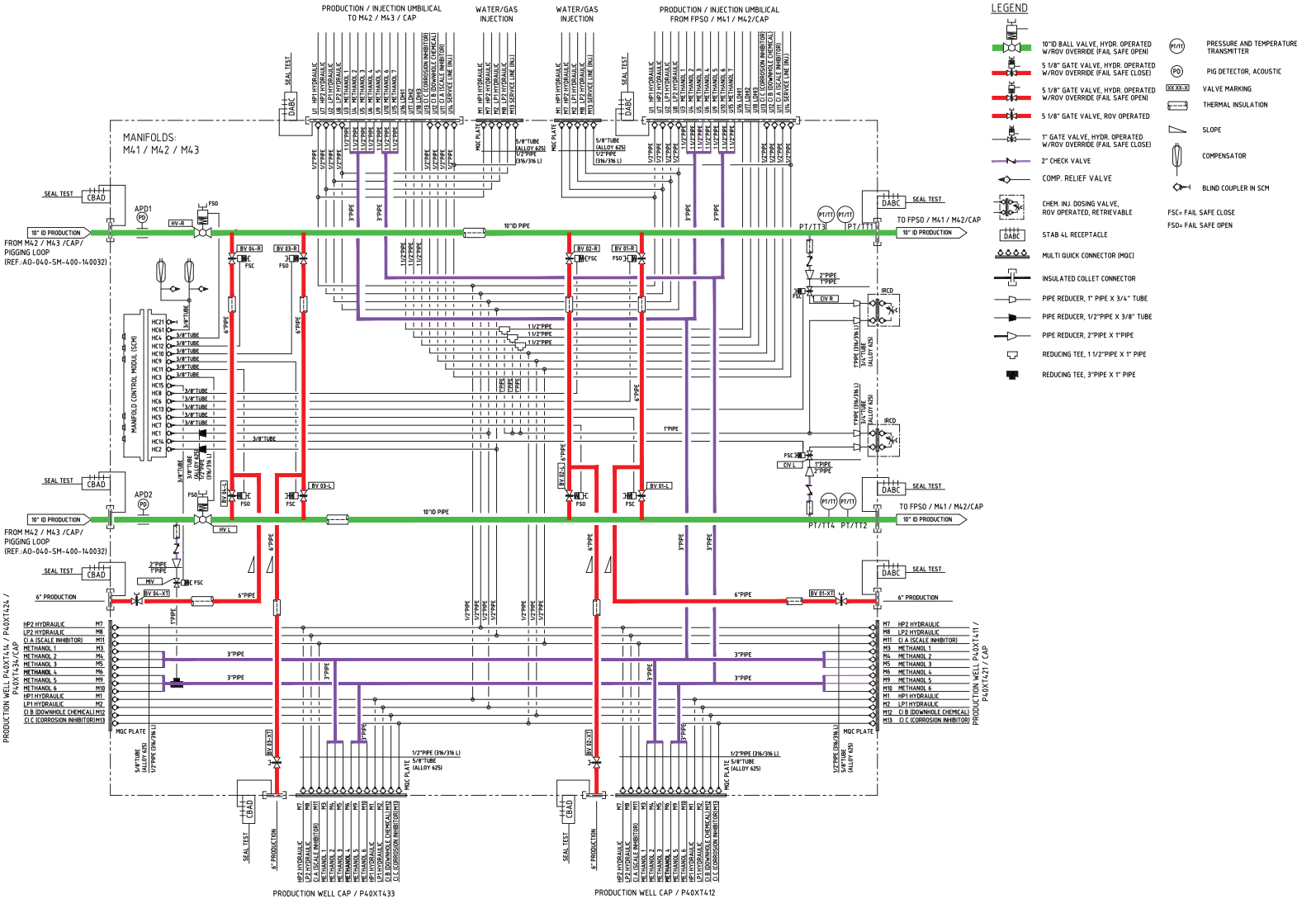

REFERENCE IS MADE TO DA600031729/AO-040-SM-400-140006

9.7.1 Oligocene Manifold Flow Schematic

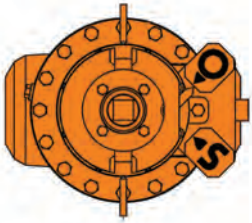

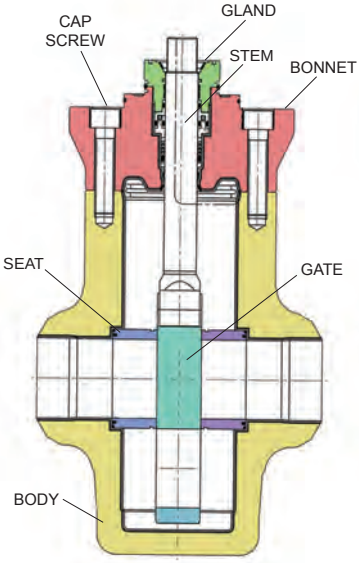

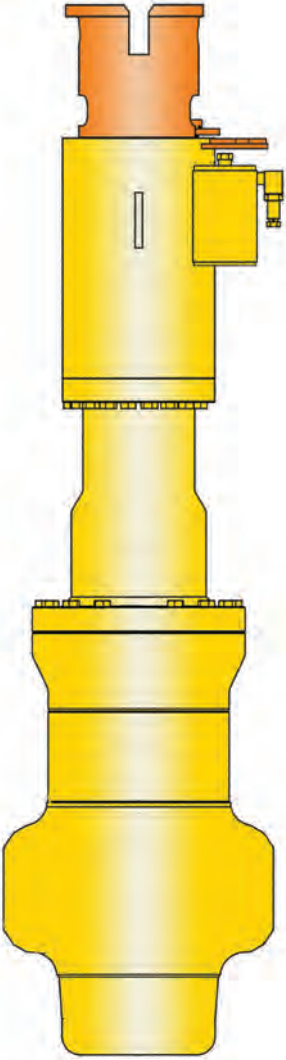

9.7.2 Oligocene Manifold Gate Valve

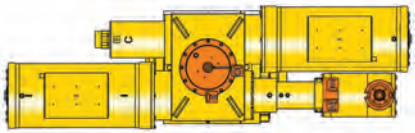

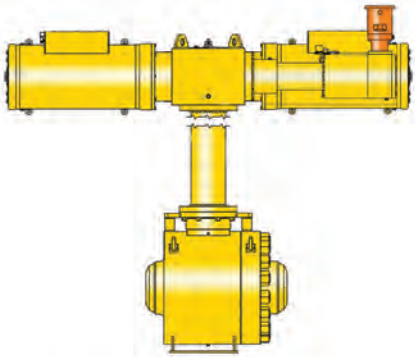

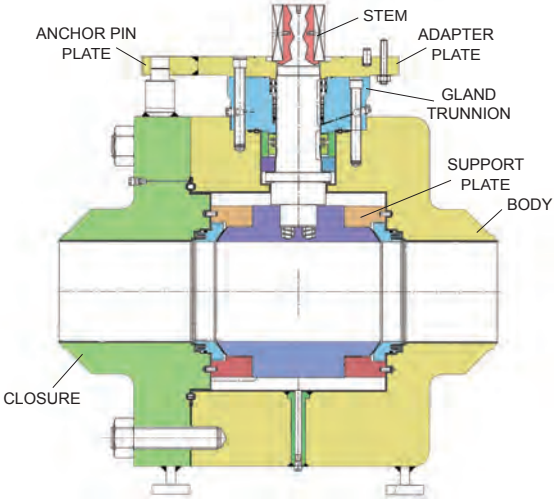

9.7.3 Oligocene Manifold Ball Valve

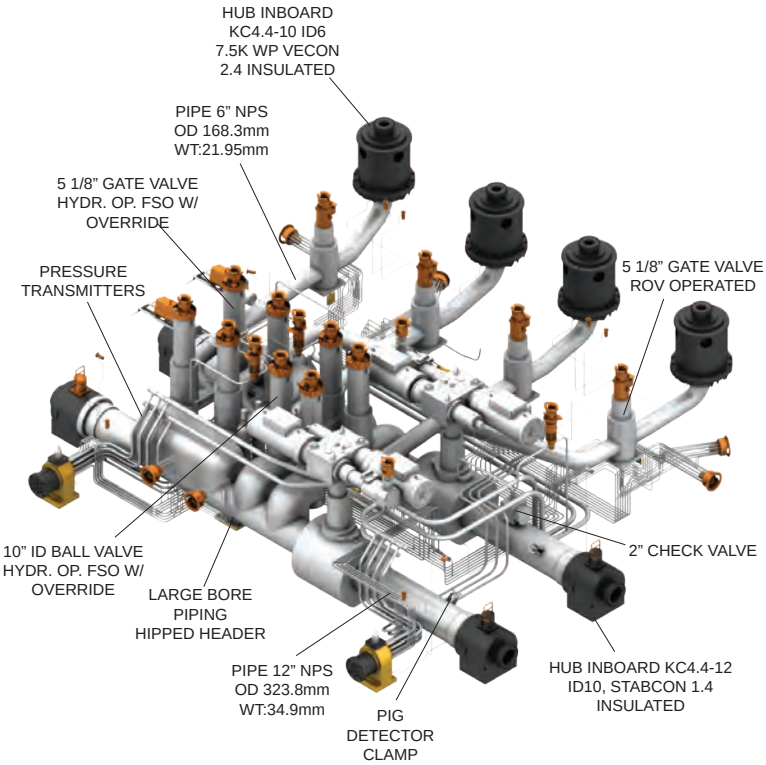

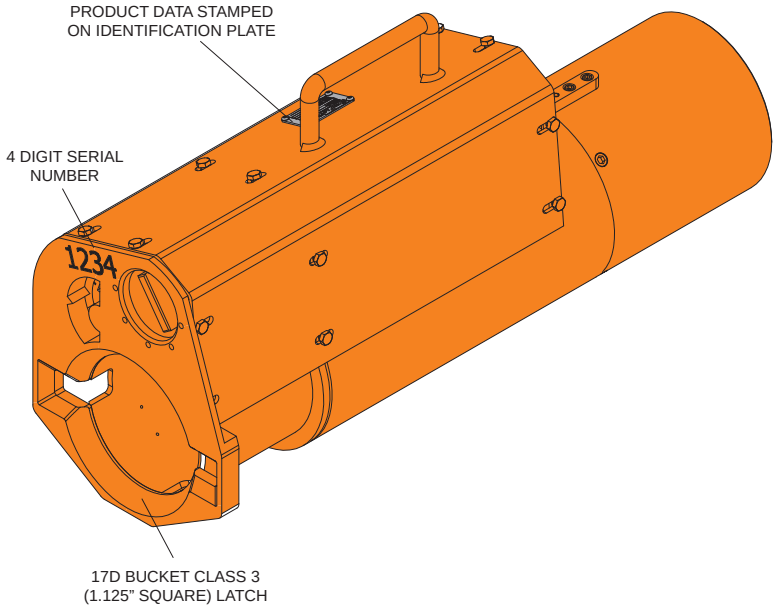

NOTE: Insulation not shown

9.7.4 Oligocene Manifold Module Large & Small Bore

9.8 CIDV Skoflo

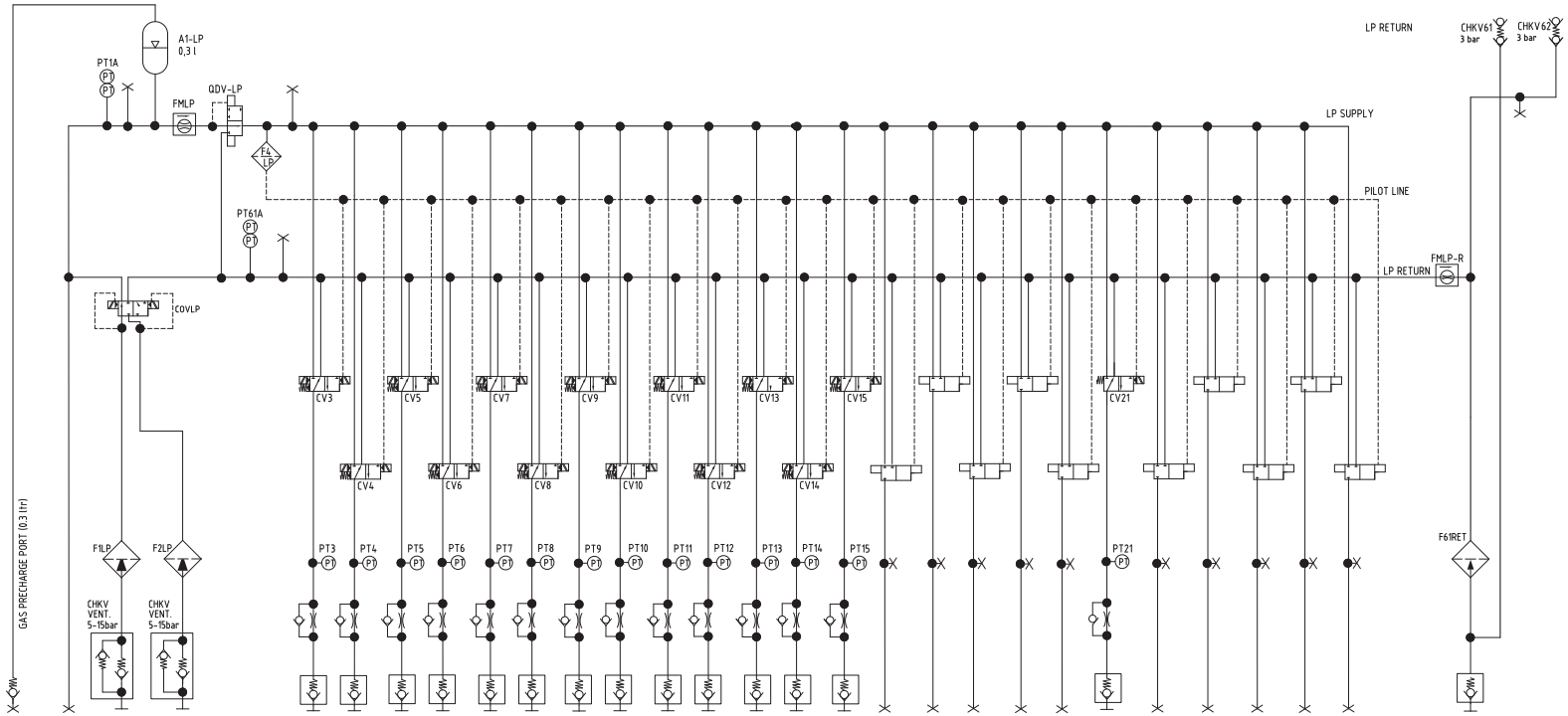

HYDR. LINES:	HC71	HC1		HC2		HC3	HC4	HC5	HC6	HC7	HC8	HC9	HC10	HC11	HC12	HC13	HC14	HC15	HC16	HC17	HC18	HC19	HC20	HC21	HC22	HC23	HC24	HC25	HC26		HC61
W.P. [BAR]:		345		345		345	345	345	345	345	345	345	345	345	345	345	345	345						345							50
FLOW RESTRICTION [BAR / (l/s)^2]:						5500	5500	5500	5500	5500	5500	5500	5500	5500	5500	5500	5500	5500						5500							
Function: Main mode MANIFOLD		LP 1		LP 2		HV L	HV R	BV01 L	BV01 R	BV02 L	BV02 R	BV03 L	BV03 R	BV04 L	BV04 R	CIV R	CIV L	MIV													RETURN
Function: Sub mode 1 SUBSEA ISOLATION VALVE		LP 1		LP 2																				SIV							RETURN
NOTE:																															

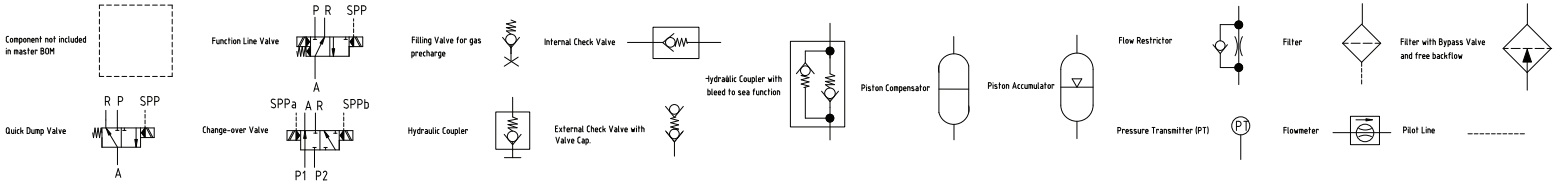

REFERENCE IS MADE TO
DA600032667/AO-040-SG-400-150015

9.9 SIV SCM (Man/SIV SCM) Schematic

10 Subsea Distribution System

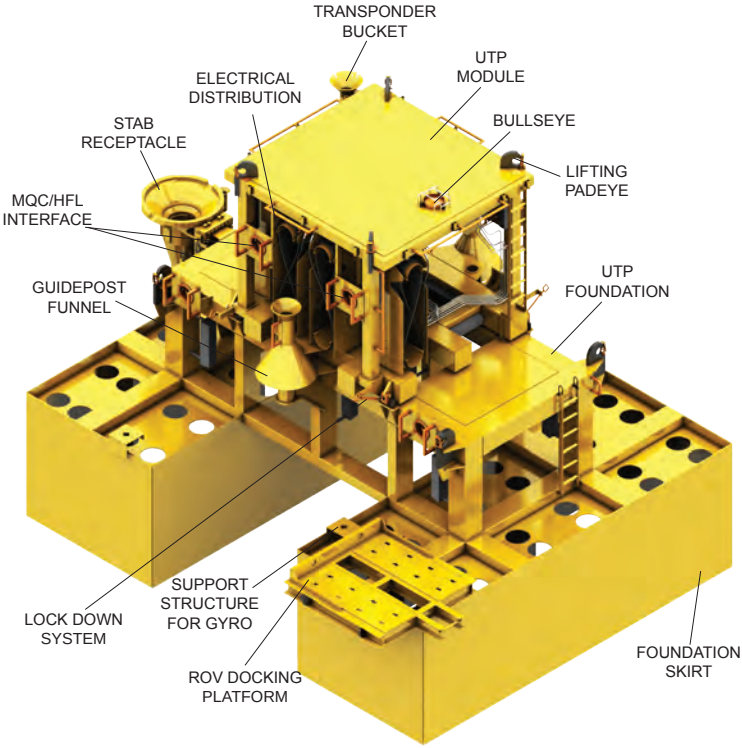

10.1 Miocene UTP

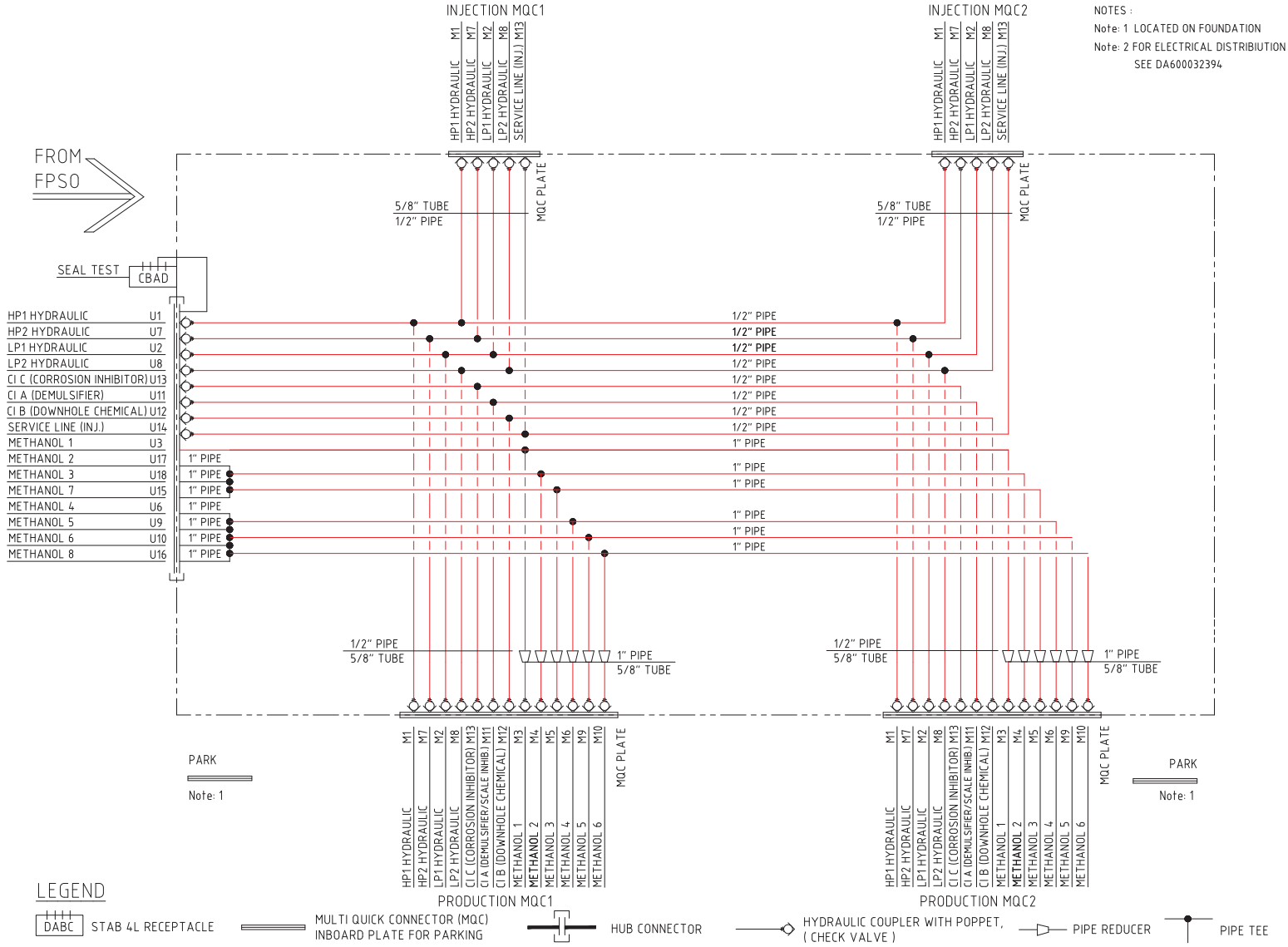

REFERENCE IS MADE TO
DA600033133/AO-040-SU-400-120006

10.1.1 Miocene UTP Flow Schematic

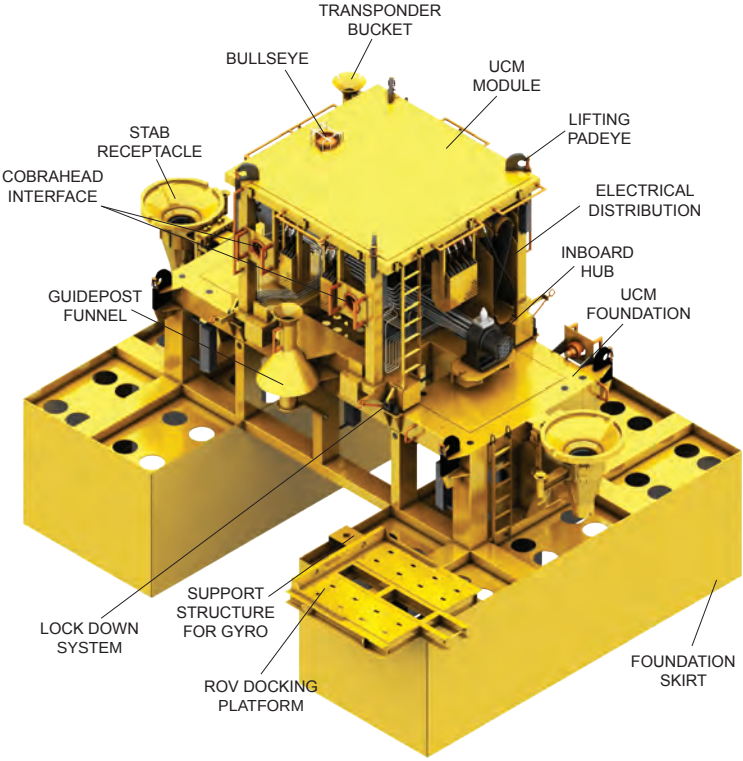

10.2 Miocene UCM

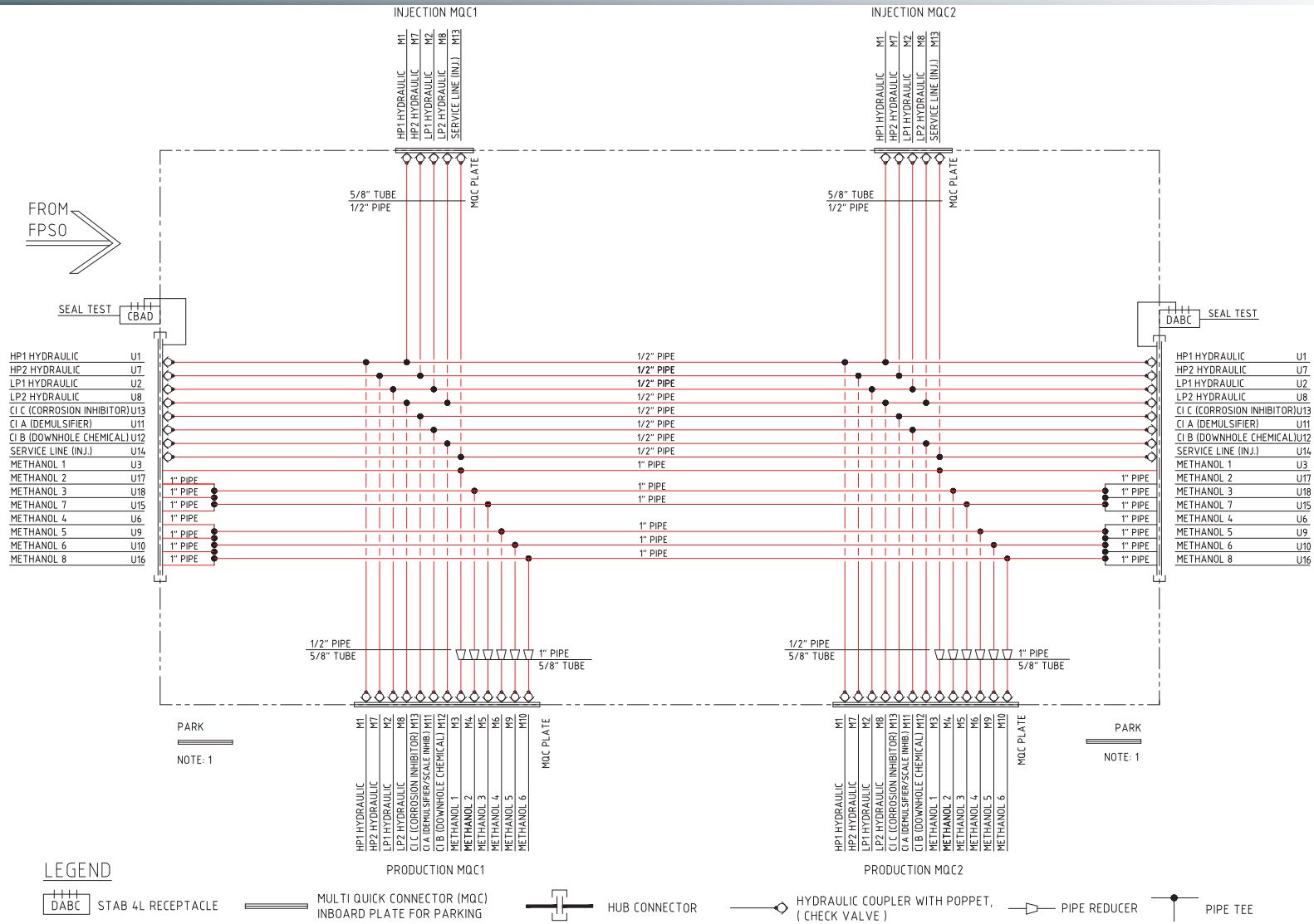

REFERENCE IS MADE TO
DA600032082/AO-040-SU-400-120012

10.2.1 Miocene UCM Flow Schematic

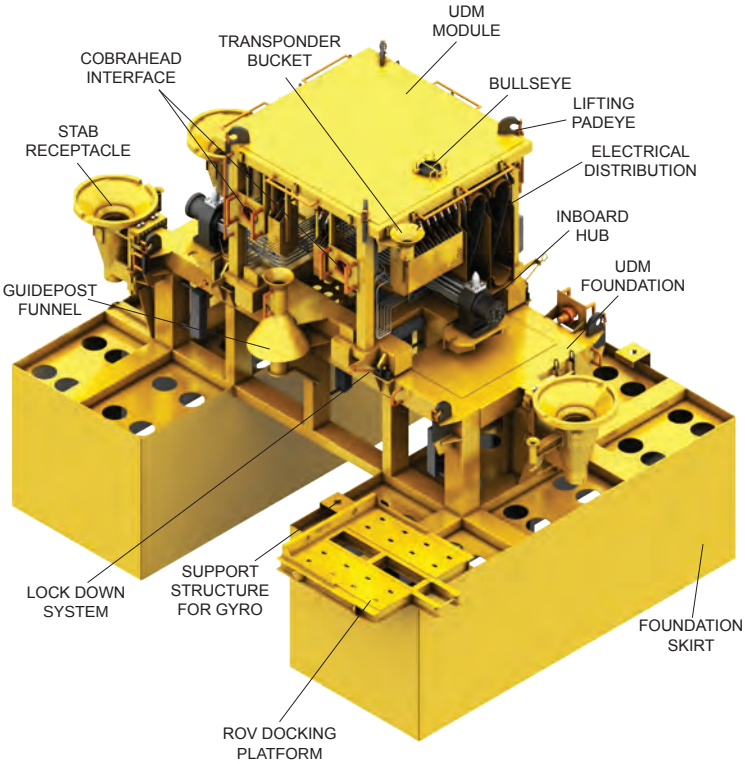

10.3 Miocene UDM

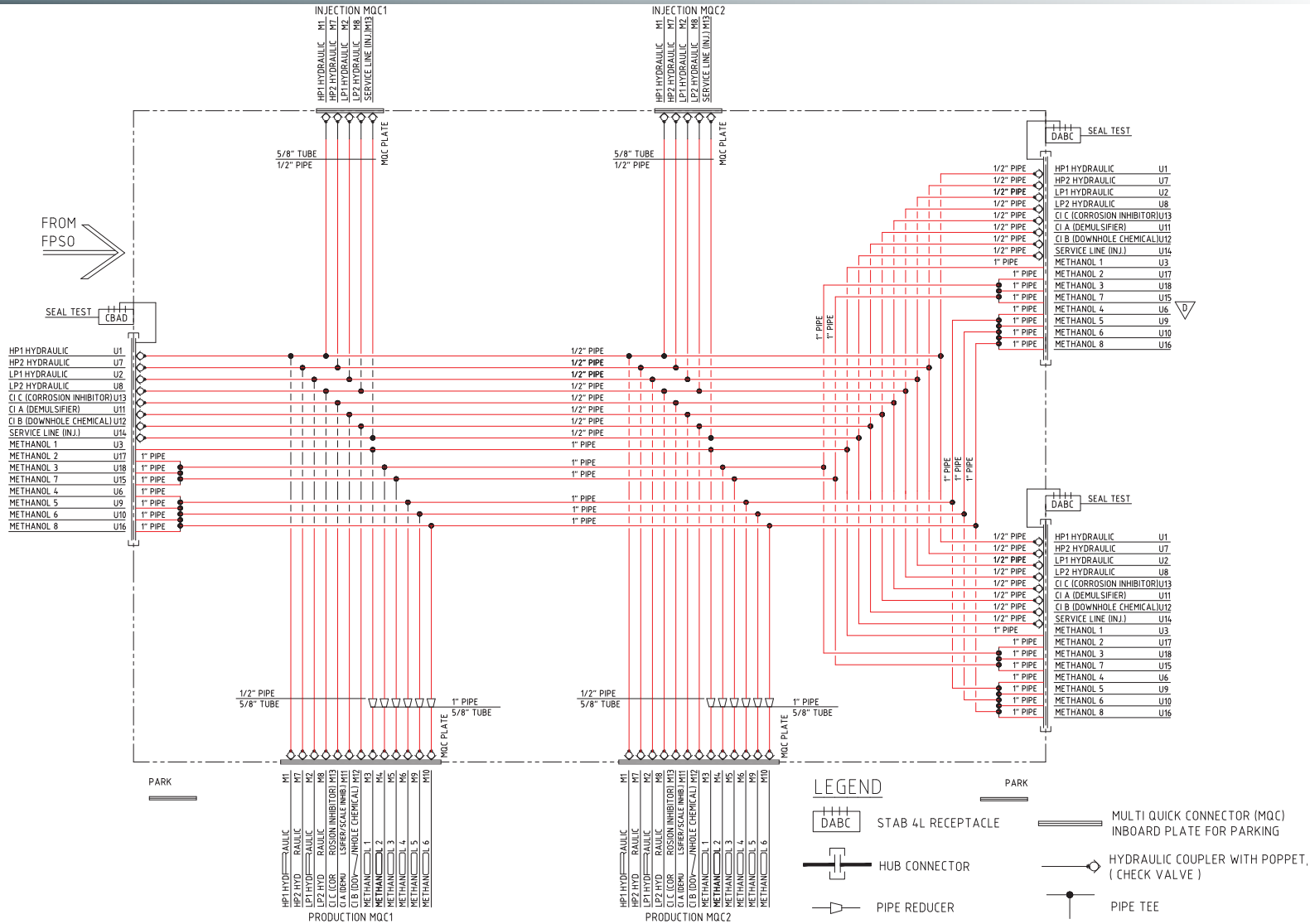

REFERENCE IS MADE TO
DA600032069/AO-040-SU-400-120018

10.3.1 Miocene UDM Flow Schematic

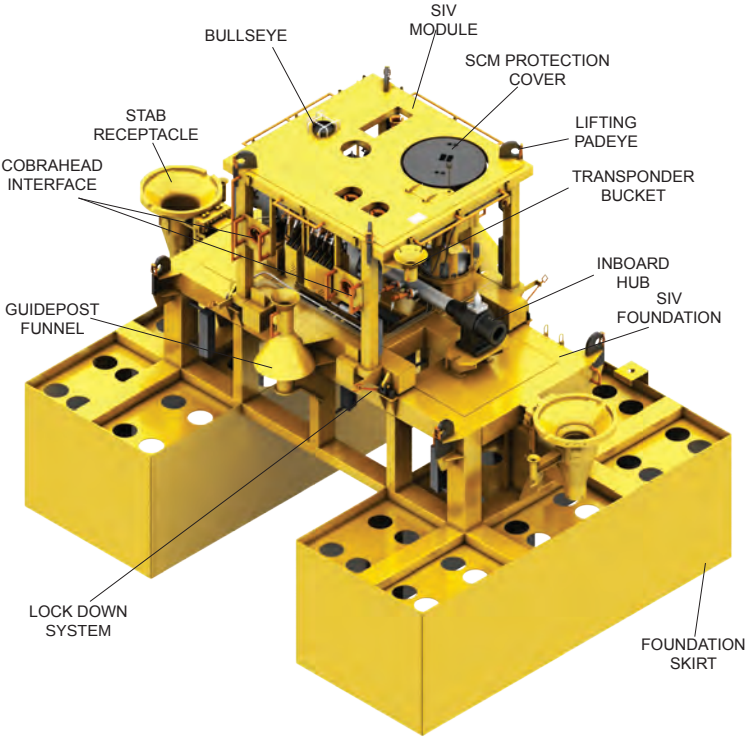

10.4 SIV Gas Export Module

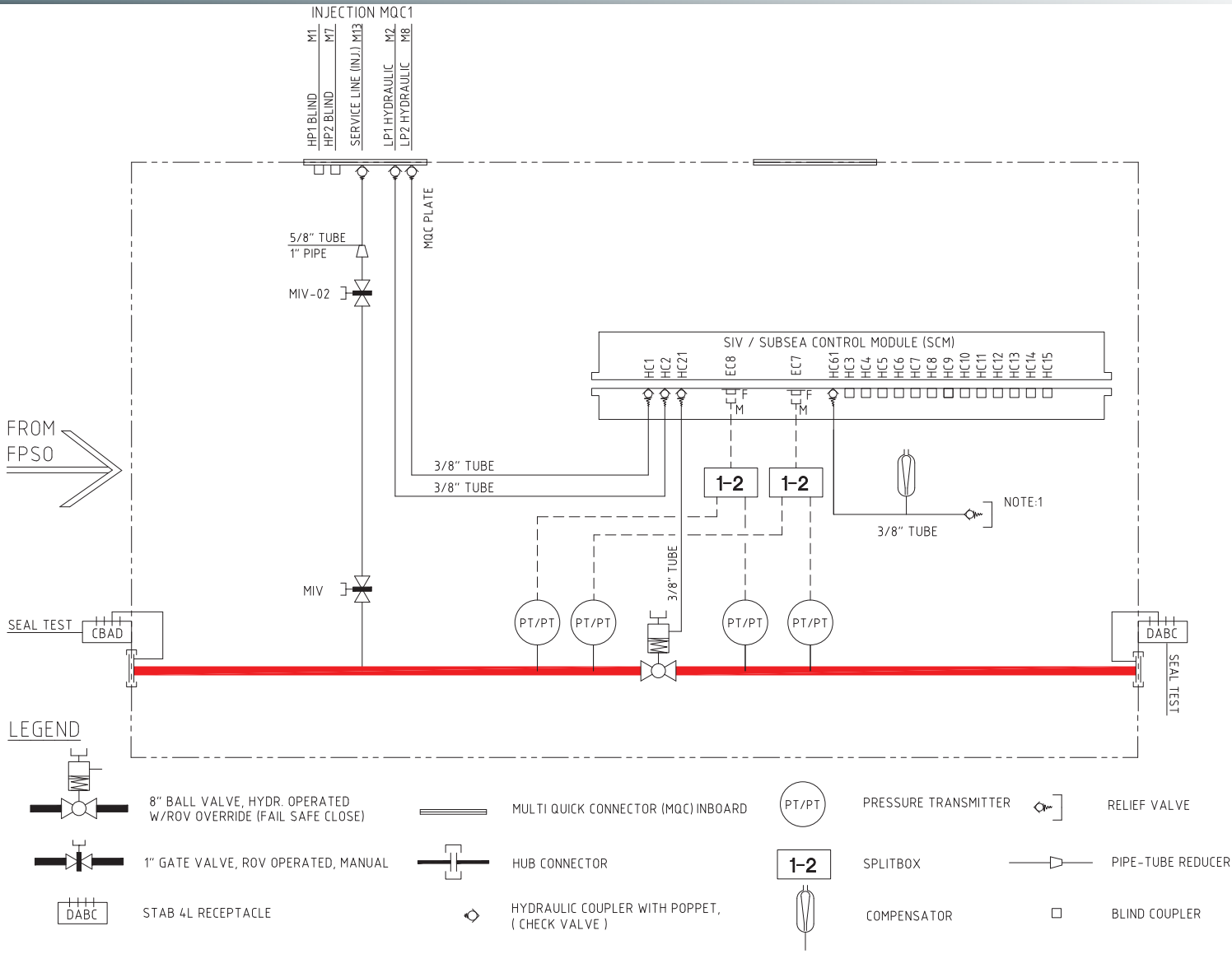

REFERENCE IS MADE TO
DA600032068/AO-040-SE-400-110012

10.4.1 SIV Flow Schematic

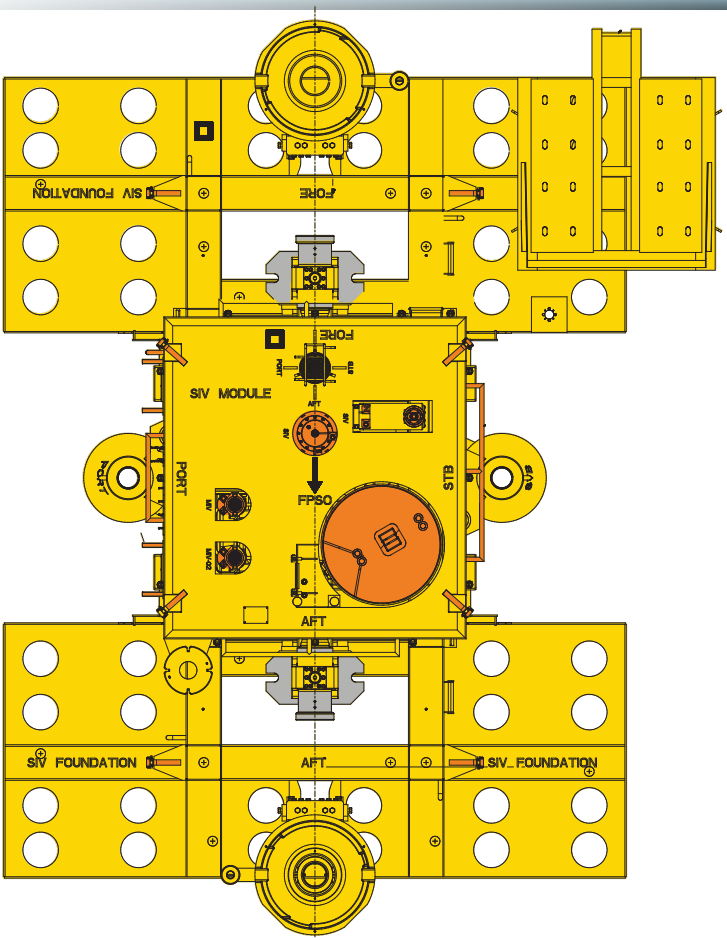

Description	P/N	Recommen-ded torque tool setting(Nm) at max. dP=345 barg	Max torque tool setting(Nm) at max. dP=345 barg	Min pres-sure/dP to open valve	No. of turns to open/ close	Direction to open
08"ID Ball Vlave, Actuated	P6000042037	1800Nm	2700	160bar	39.7	CCW
1" Gate Valve, ROV Operated	P6000053097	150Nm	300	N/A	11	CCW

10.4.2 SIV Top View

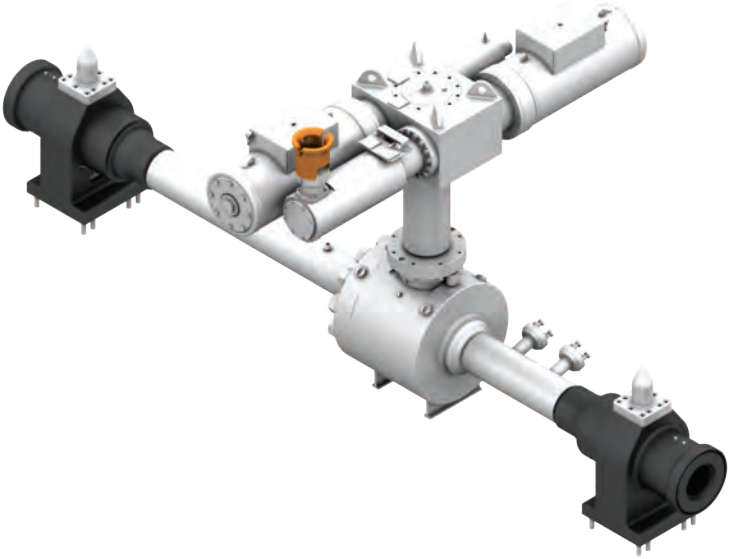

10.4.3 SIV Large Bore

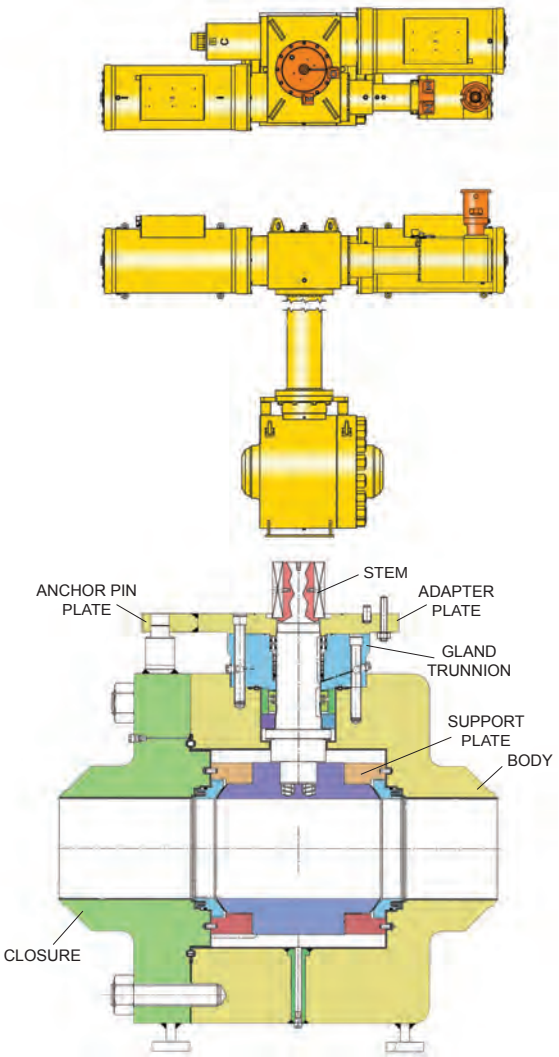

10.4.4 SIV 8” Ball Valve, Hydraulic operated w/ROV override

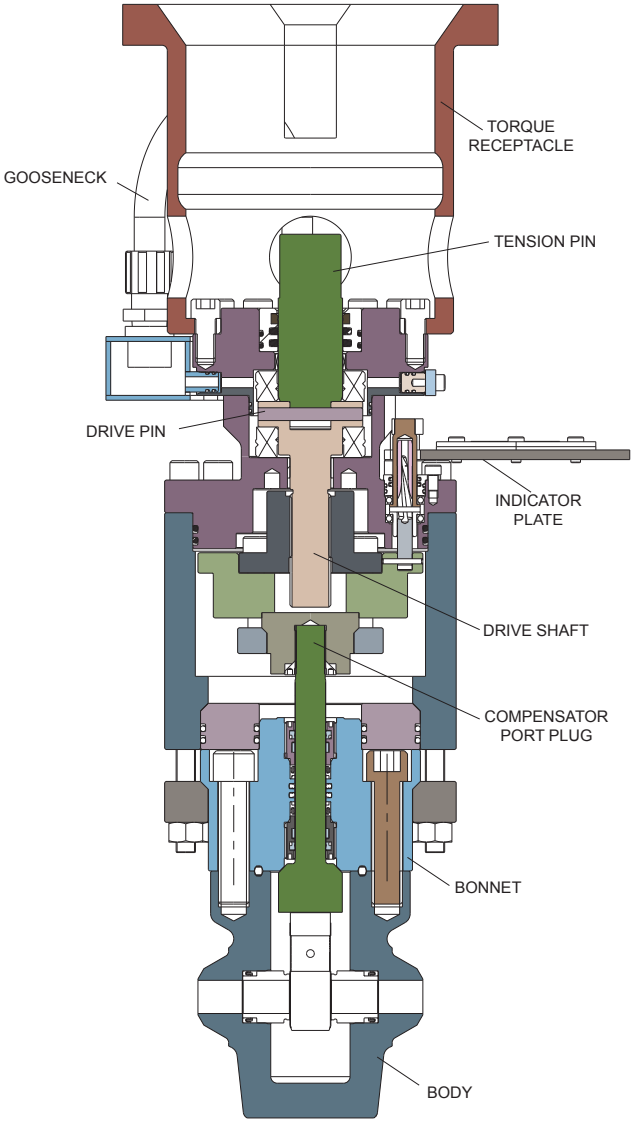

10.4.5 SIV Gate Valve, 1”

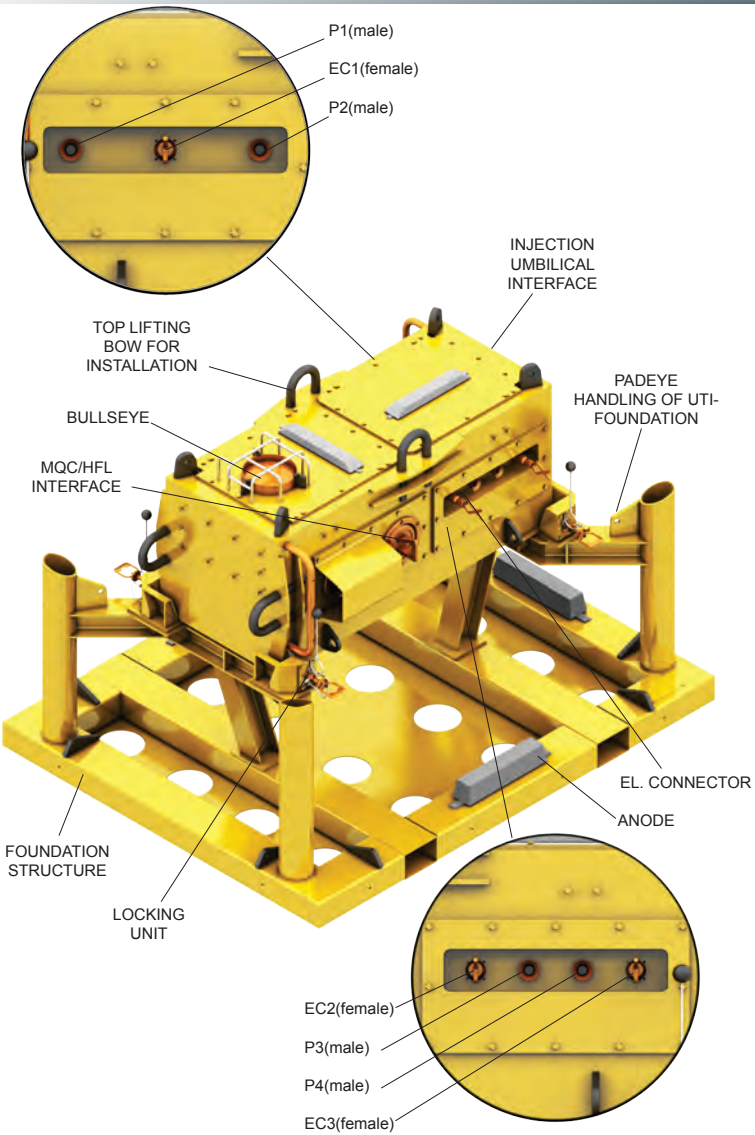
P1(male)
EC1(female)
P2(male)
INJECTION UMBILICAL INTERFACE
TOP LIFTING BOW FOR INSTALLATION
PADEYE HANDLING OF UTI-FOUNDATION
BULLSEYE
MQC/HFL INTERFACE
EL. CONNECTOR
ANODE
FOUNDATION STRUCTURE
LOCKING UNIT
EC2(female)
P3(male)
P4(male)
EC3(female)

10.5 UTI

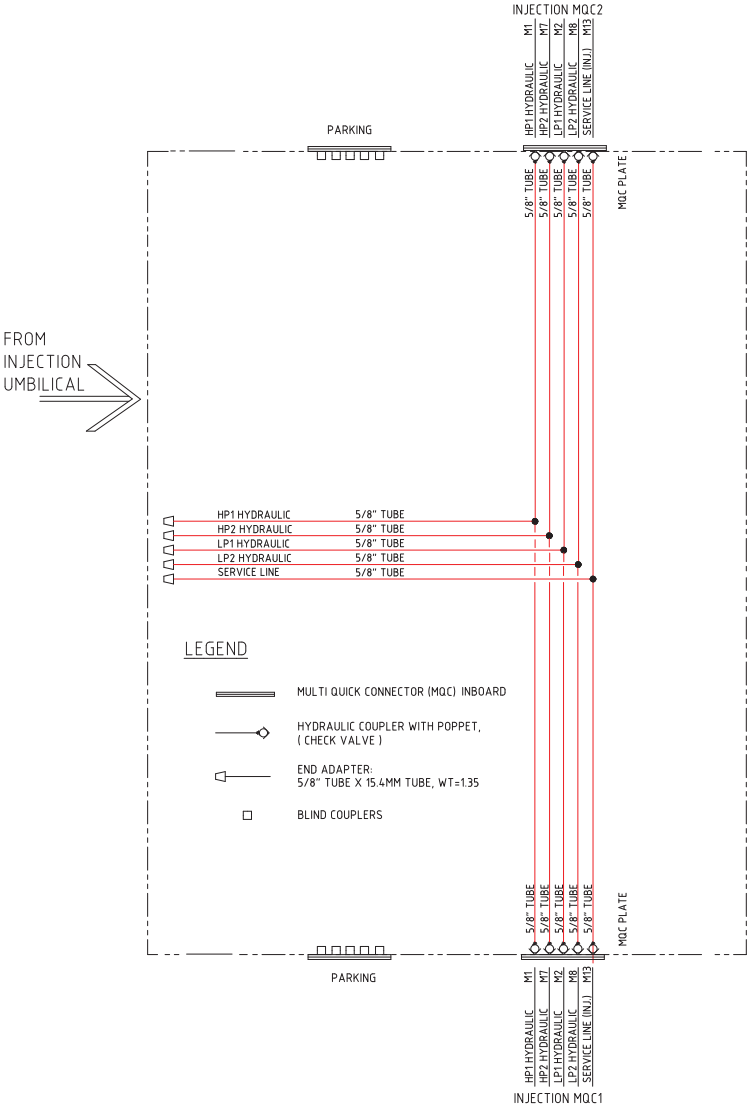

10.5.1 UTI Flow Schematic

General Tools

4 OFF
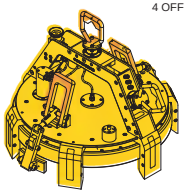
P6000032617
ROV TOOL, WELLHEAD CLEANING, VX 18 3/4

4 OFF

P6000011921
ROV TOOL, SEAL-REPLACEMENT, WELLHEAD VX 18 3/4IN

6 OFF
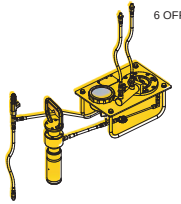
P6000039162
ROV TOOL, EXTERNAL SEAL TEST KIT, MRT, ASSY

12 OFF

P6000046966
ROV TOOL, HUB INSPECTION CAMERA, MK. 2

21 OFF
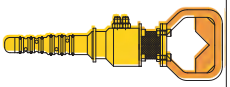
P6000067293 (old 100002110)
ROV TOOL, STAB 4L, 345 bar

5 OFF

P6000068186 (old 100046149)
JUMPER, STAB 6L, 207 BAR W/TR BOX

4 OFF

P6000067294 (old 100032226)
ROV TOOL, STAB 6L, 207 BAR, (INCL. HOSES & BOX)

10 OFF
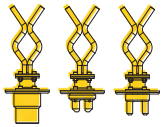
100012558
Torque Adapter Kit

3 OFF
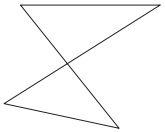
P6000073552
ROV TOOL, TORQUE TOOL, ADAPTER KIT FOR BENTLEY XT VALVES

12 OFF
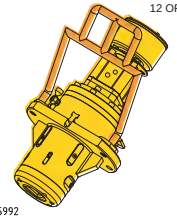
100035992
ROV TOOL, TORQUE TOOL, API 17D CLASS 1-4 (2700 NM)

12 OFF
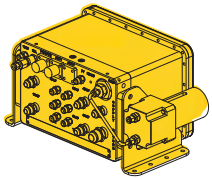
100035993
ROV TOOL, REMOTE CONTROL UNIT, MK2

3 OFF
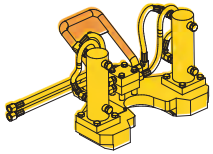
P6000034203
ROV TOOL, OVERRIDE JACK, KC4-3, TYPE 3

2 OFF
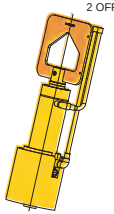
100029631
SCM OVERRIDE TOOL MKII

2 OFF
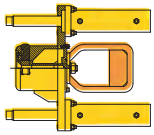
7604322
MQC OVERRIDE JACK MKII

1 OFF
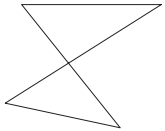
P6000072216
BASKET, INSTALLATION F/ FLYING LEADS
UDF JUMPER INSTALLATION BASKET

4 OFF

7602274
ORIENTATION DEVICE

2 OFF
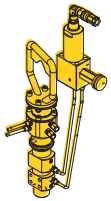
100030589
MRT SOFT LANDING EXTENSION KIT

2 OFF
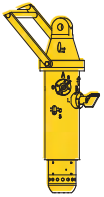
100014893
LATCH UNIT TOOL, MULTI FUNCTIONAL, ASSY, MK4

2 OFF
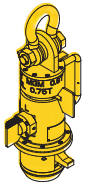
P6000060089
ROV TOOL, LATCH, LIFT TOOL, API 17D CL.1-4, DHL 1.6T, ASSY

4 OFF
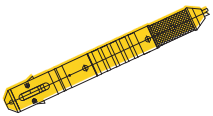
100017933
WEPCO GUIDE WIRE ANCHOR SWL 4T, ACC. VMO

1 OFF
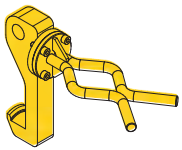
P6000025541
GUIDE POST, INTERVENTION, ASSY, CONTINGENCY RELEASE HOOK

5 OFF
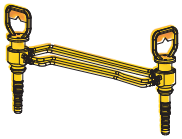
P6000067353
ROV TOOL, STAB 4L, 3M LONG JUMPER, 345 BAR, ASSY

3 OFF
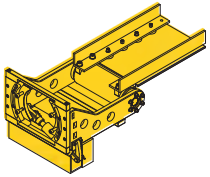
100036811
FLYING LEAD ORIENTATION TOOL (FLOT)

2 OFF
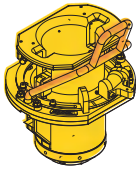
P6000052092
ROV TOOL, TORQUE TOOL, GEAR BOX, ISO 13628-8 CLASS 4-5

2 OFF
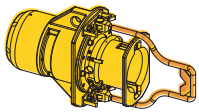
P6000015059
ROV TOOL, TORQUE TOOL, GEAR BOX, ISO 13628-8 CLASS 4-6

Surface Equipment

2 OFF

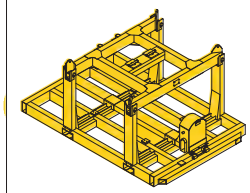

P6000041660
SKID, TRANSPORT F/ CAT MK 1.4, ASSY

8 OFF

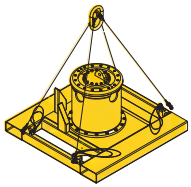

100061727
TEST & TRANSP. SKID, VCAT MK2, VECON 2.4

2 OFF

100028733
SKID, INST. MRT /SCM 200 Ext.Mech., ASSY

2 OFF

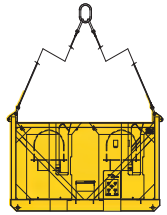

P6000017745
INSTALLATION TOOL, CHOKE INSERT TEST STAND

12 OFF

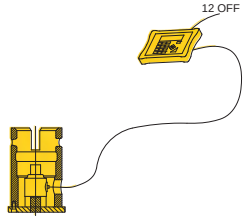

7600544
CALIBRATION TEST JIG, FOR TORQUE TOOL

1 OFF

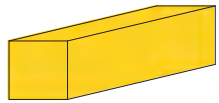

P6000047964
CONTROL/WORKSHOP CONTAINER ASSY, F/ ROV TOOLS, AND OFFICE

2 OFF

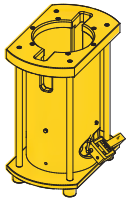

P6000015062
ROV TOOL, TORQUE TOOL, GEAR BOX TEST JIG, ISO 13628-8 CLASS 4-6

3 OFF

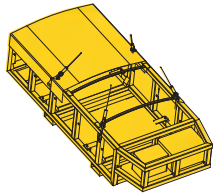

P6000051718
TRANSPORTATION SKID ASSY, F/HPU, EXTENSION SKID, ROV MOUNTED

1 OFF

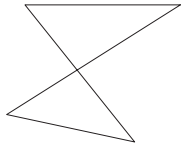

P6000052033
TRANSPORTATION SKID ASSY, F/ROV TOOLS, SAMPLING UNIT TOOL, MODULE, ASSY, ROV MOUNTED

1 OFF

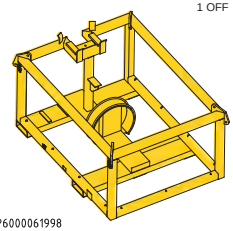

P6000061998
FLOWLINE LIFTING TOOL, TERMINATION HEAD, STABCON 1.4, ASSY, KC4.4-12, TRANSPORTATION SKID

2 OFF

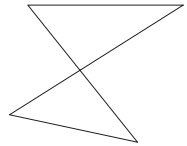

P6000065605
TEST/FLUSHING RIG ASSY, F/ CAT, AND ROV TOOLING, 250 BAR 24 L/MIN, WITH FRAME, SLINGS, TARPAULINE AND VALVE PANEL

1 OFF

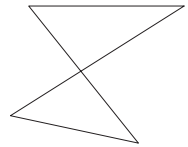

P6000071257
BASKET, INSTALLATION F/FLYING LEADS, LOADING KIT

2 OFF

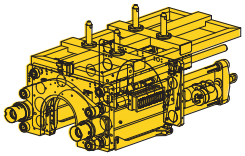

100059794
DUMMY CONNECTOR ACTUATION TOOL, CAT1.4

5 OFF

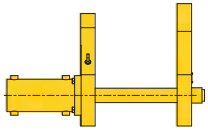

P6000050026
TERMINATION HEAD KC4.4-12, STABCON 1.4, WORKSHOP STROKING TOOL, ASSY

2 OFF

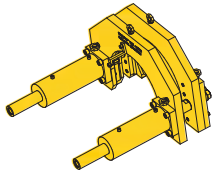

P6000045117
TIE-IN TOOL, VCAT MK2, ASSY, WORK SHOP TOOL, FOR INSULATED CONNECTOR

2 OFF

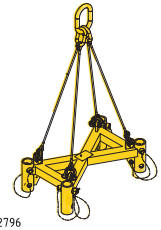

100022796
SURFACE LIFTING FRAME TOOL, ASSY, SCV 3000 INTERFACE, SWL 8.2T

2 OFF

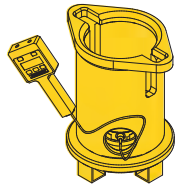

P6000023065
ROV TOOL, TORQUE, TEST JIG CL 4-5

Stabcon 1.4 System

4 OFF

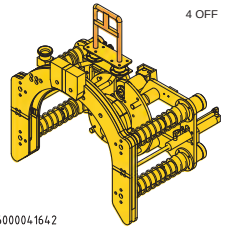

P6000041642
ROV TOOL, HUB CLEANING, KC4.4-12 STABCON 1.4 INSULATED/UNISULATED, INB/OUTB, MULTIBORE

4 OFF

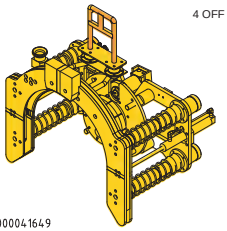

P6000041649
ROV TOOL, HUB CLEANING, KC4.4-12 STABCON 1.4 INSULATED/UNINSULATED, INB/OUTB, MONOBORE

5 OFF

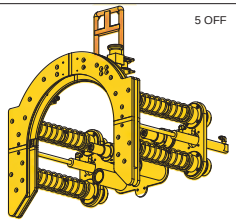

P6000041643
ROV TOOL, SEAL-REPLACEMENT, KC4.4-12 STABCON 1.4 INSULATED/UNINSULATED OUTBOARD, MULTIBORE

4 OFF

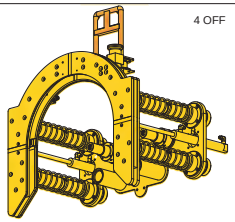

P6000049517
ROV TOOL, SEAL-REPLACEMENT, KC4.4-12 STABCON 1.4 INSULATED/UNINSULATED OUTBOARD, MONOBORE

2 OFF

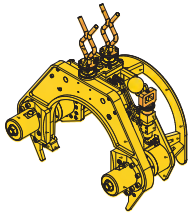

P6000041655
ROV TOOL, CAP REMOVAL, KC4.4-12, INBOARD, INSULATED/UNINSULATED

2 OFF

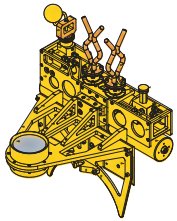

P6000041881
ROV TOOL, CLAMP REMOVAL, KC4.4-12, INBOARD, INSULATED/UNINSULATED

1 OFF

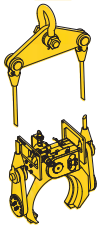

P6000061997
FLOWLINE LIFTING TOOL, TERMINATION HEAD, STABCON 1.4, ASSY, KC4.4-12, DHL 100T

1 OFF

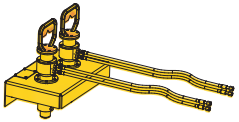

P6000064825
ROV TOOL, OVERRIDE, PANEL EXTENSION KIT, ASSY

2 OFF

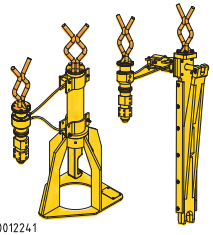

100012241
OVERRIDE JACK, CAT FLYING INTERF., ASSY

3 OFF

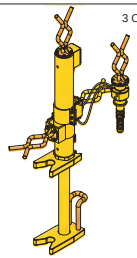

100008621
OVERRIDE JACK PLM/YOKE, ASSY

2 OFF

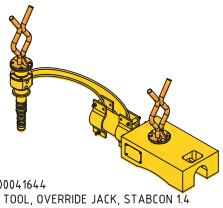

P6000041644
ROV TOOL, OVERRIDE JACK, STABCON 1.4 INSULATED/UNINSULATED, TERMINATION HEAD LOCKING MECHANISM

Vecon 2.4 System

3 OFF

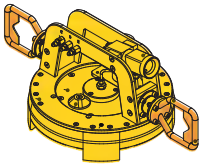

P6000041651
ROV TOOL, HUB CLEANING, KC4.4-10 VECON 2.4 INSULATED/UNINSULATED, INBOARD, MONOBORE

3 OFF

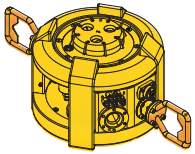

P6000046896
ROV TOOL, HUB CLEANING, KC4.4-10, VECON 2.4, INSULATED/UNINSULATED, OUTBOARD, MONOBORE

3 OFF

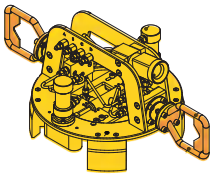

P6000041653
ROV TOOL, SEAL-REPLACEMENT, KC4.4-10 VECON 2.4 INSULATED/UNINSULATED INBOARD MONOBORE

3 OFF

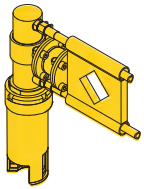

100033788
SECONDARY RELEASE TOOL, VECON

4 OFF

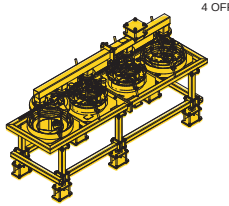

P6000058218
TOOL BASKET ASSY, F/ ROV TOOLS, ADAPTER KIT FOR VECON 2.4 TOOLS, ASSY

11.2 Installation Tool for Termination Head

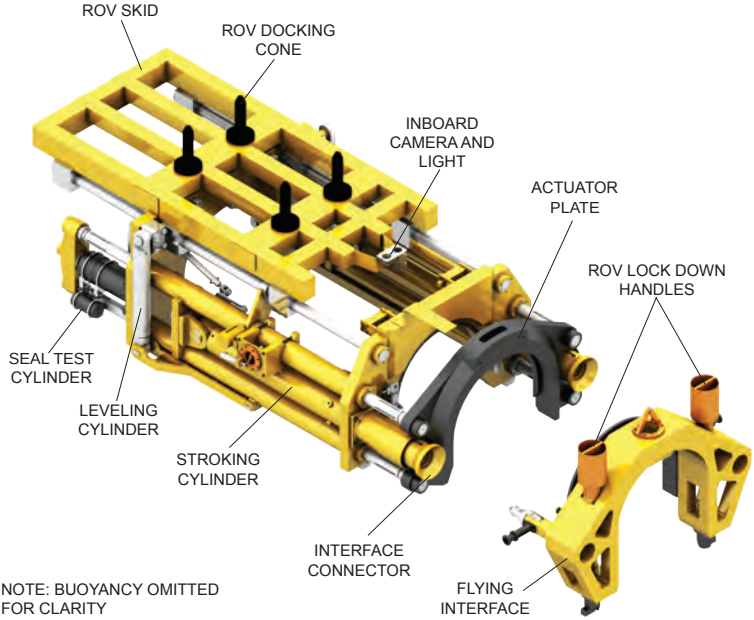

11.3 CAT Tie-in Tool for Umbilicals and Flowlines

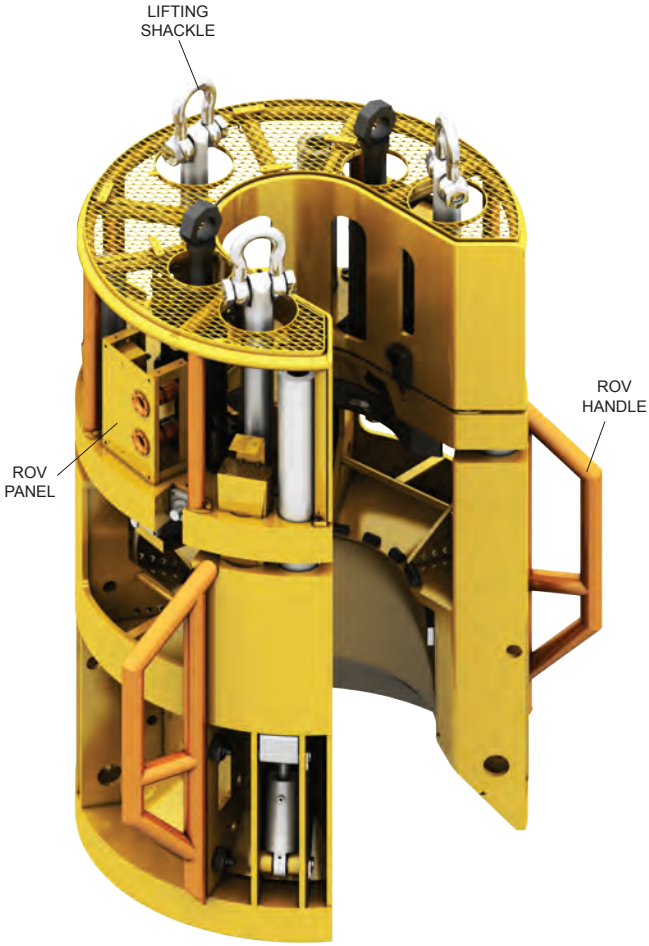

11.4 VCAT Tie-in Tool for Well Jumpers

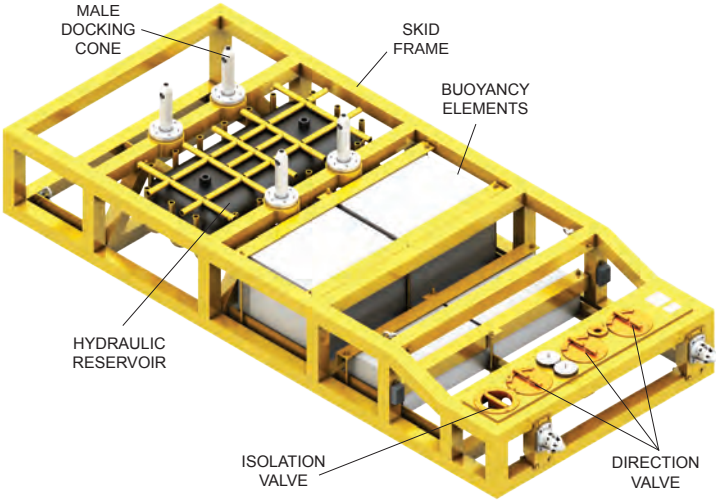

11.5 Subsea HPU for XT and Tree Cap Connector Operations

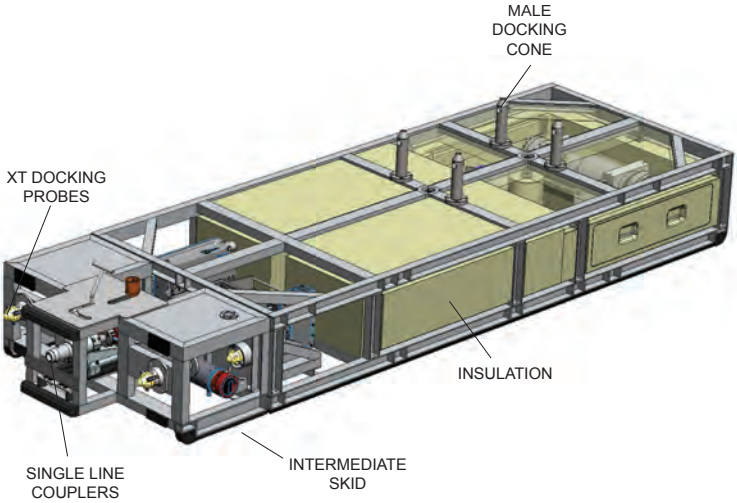

11.6 XT Sampling Skid

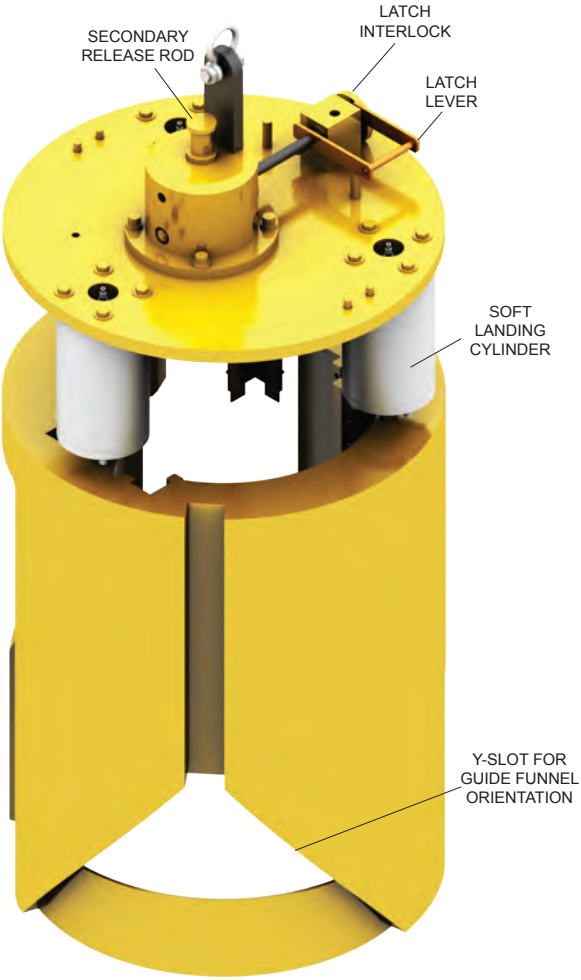

11.7 Insert Choke Module Running Tool

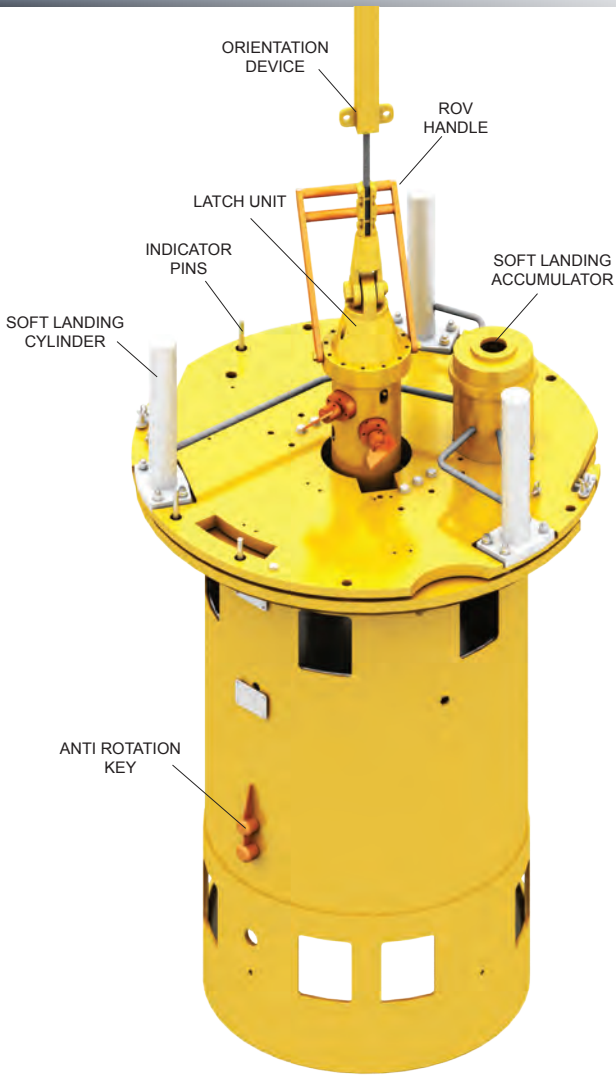

11.8 Subsea Control Module Running Tool

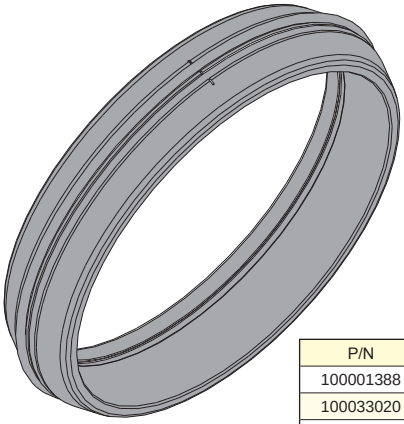

KX GASKET

P/N	Description	System
100001388	Metal Seal, KX-6”	Stabcon (Flowline)
100033020	Metal Seal, KX-6”	Vecon (Welljumper)
P6000012800	Metal Seal, KX-8”	Stabcon (Flowline)
P6000012867	Metal Seal, KX-10”	Stabcon (Flowline)

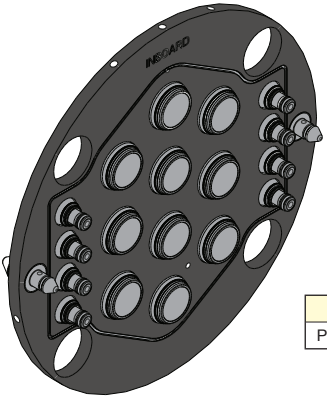

SEAL PLATE

P/N	Description
P6000041972	Seal Plate, KC4.2-12, ID 1 1/2 x10 + 8HL

12 Well Jumper System

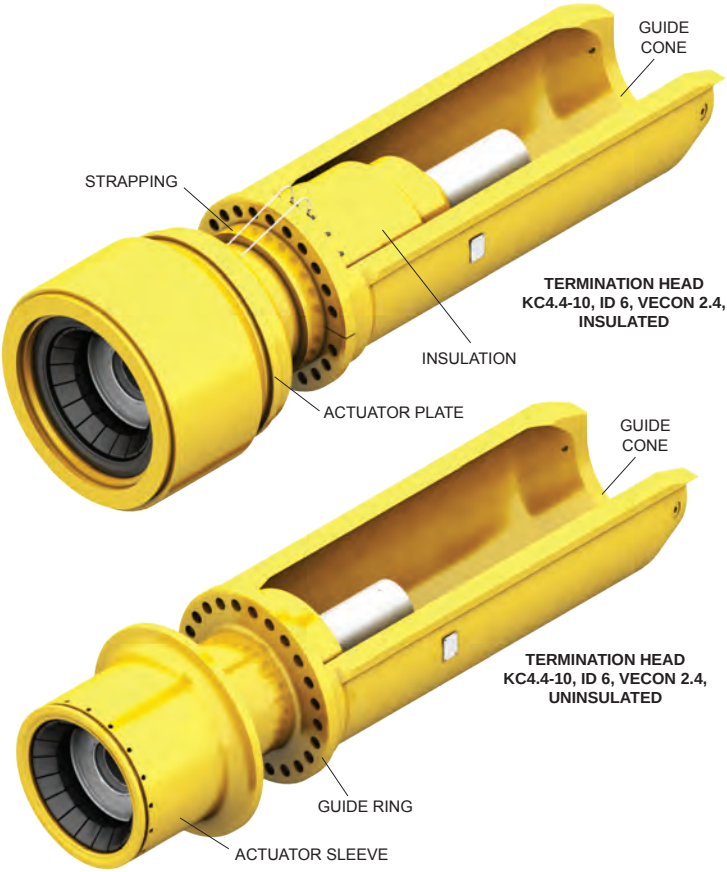

P/N	Description
P6000043396	Termination Head KC4.4-10, ID 6, Vecon 2.4, Insulated, Miocene P10, P20,and P30
P6000051845	Termination Head KC4.4-10, ID 6, Vecon 2.4, Insulated, Miocene P40
P6000041992	Termination Head KC4.4-10, ID 6, Vecon 2.4, Injection
P6000064802	Termination Head KC4.4-10, ID 6, Vecon 2.4, Injection, dead leg I10, I20

12.1 Vecon Termination Heads

HUB INBOARD, KC4.4-10, ID 6, VECON 2.4, INSULATED

HUB INBOARD, KC4.4-10, ID 6, VECON 2.4, INJECTION XT AND IN-LINE TEE

P/N	Description
P6000047098	Hub inboard, KC4.4-10, ID6, Vecon 2.4, Insulated, In-line Tee
P6000041912	Hub inboard, KC4.4-10, ID6, Vecon 2.4, Insulated, Production XT
P6000044797	Hub inboard, KC4.4-10, ID6, Vecon 2.4, Insulated, Oligocene Production Manifold
P6000047092	Hub inboard, KC4.4-10, ID6, Vecon 2.4, Injection In-line Tee
P6000041906	Hub inboard, KC4.4-10, ID6, Vecon 2.4, Gas and Water Injection XT

12.2 Vecon Hubs

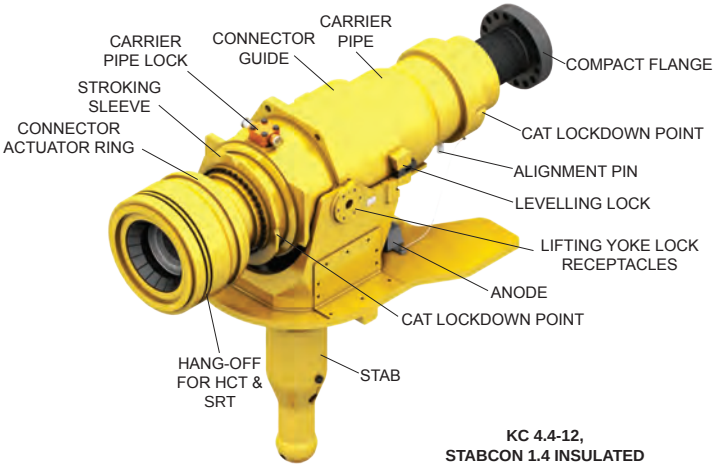

KC 4.4-12, STABCON 1.4 INSULATED

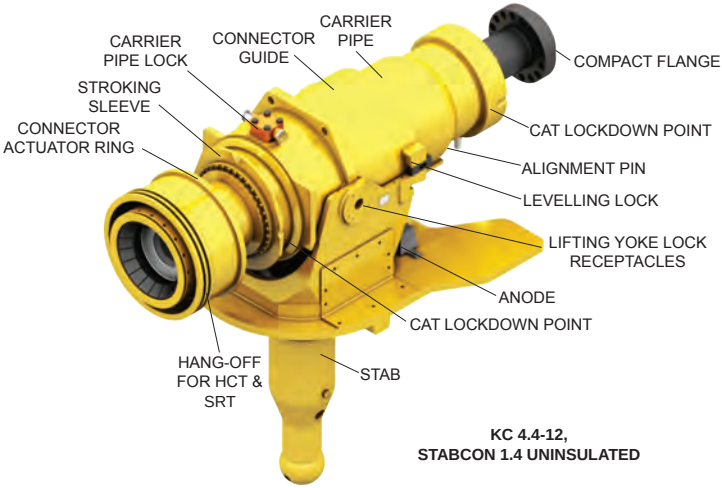

KC 4.4-12, STABCON 1.4 UNINSULATED

13.1 Stabcon Termination Heads

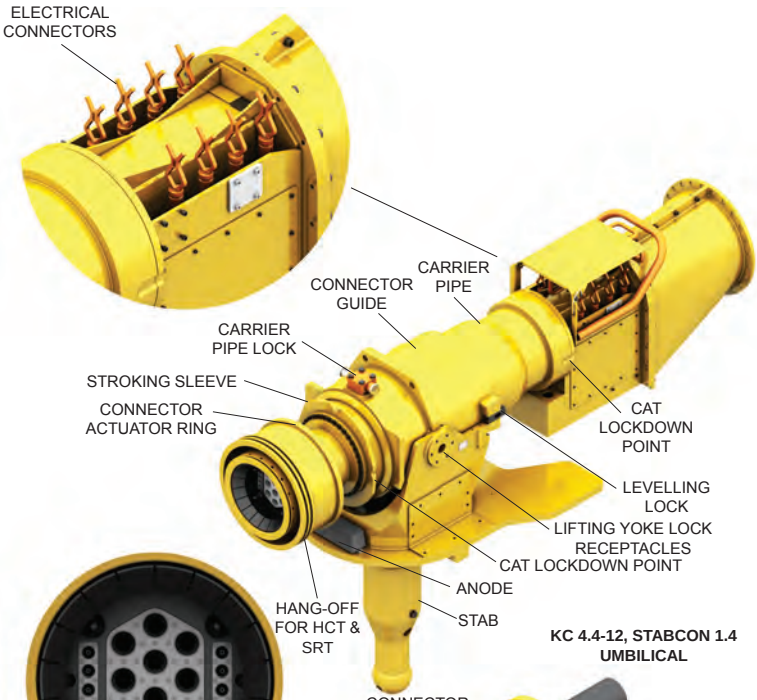

KC 4.4-12, STABCON 1.4 UMBILICAL

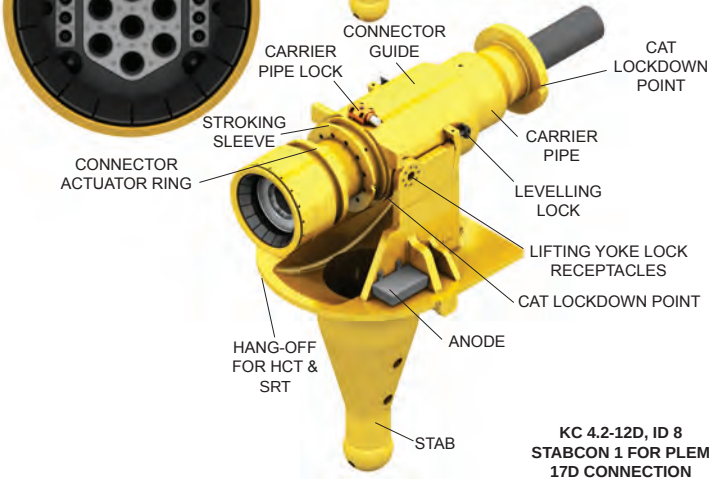

KC 4.2-12D, ID 8 STABCON 1 FOR PLEM 17D CONNECTION

Insulated Termination Heads

P/N	Description
P6000041987	Termination Head, KC4.4-12, ID10, Stabcon 1.4, Insulated w/Compact Flange, SSU, P10, P20, P30 and P40

Uninsulated Termination Heads

P/N	Description
P6000041991	Termination Head, KC4.4-12, ID8, Stabcon 1.4, w/Compact Flange, SIV Manifold, GE/GI
P6000046535	Termination Head, KC4.4-12, ID10, Stabcon 1.4, Pig Receiver, Production FLET P10, P20 and P30
P6000046537	Termination Head, KC4.4-12, ID8, Stabcon 1.4, Pipe to Pipe, SIV Manifold, GE/GI
P6000046538	Termination Head, KC4.4-12, ID8, Stabcon 1.4, Pig Receiver, Gas Export, I30, I45
P6000046538	Termination Head, KC4.4-12, ID10, Stabcon 1.4, Pig Receiver, Injection FLET, I10, I20 and I40
P6000048517	Termination Head, KC4.4-12, ID6, Stabcon 1.4, w/Compact Flange, Miocene Injection Line, Dead Leg, I10 and I20
P6000051881	Termination Head, KC4.4-12, ID10, Stabcon 1.4, w/Compact Flange, I10
P6000054635	Termination Head, KC4.4-12, ID8, Stabcon 1.4, Commisioning, Temporary Pig Receiver, I45
P6000055071	Termination Head, KC4.4-12, ID10, Stabcon 1.4, Commisioning, Temporary Scope, I10

Umbilical Termination Heads

P/N	Description
P6000041994	Termination Head, KC4.4-12, ID1 1/2 x 10 + 8HL, Stabcon 1.4, Static Infield Umbilical, Oligocene, FPSO side
P6000049728	Termination Head, KC4.4-12, ID1 1/2 x 10 + 8HL, Stabcon 1.4, Dynamic Umbilical, Oligocene, DR
P6000041996	Termination Head, KC4.4-12, ID1 1/2 x 10 + 8HL, Stabcon 1.4, Static Infield Umbilical, Oligocene, Tree side
P6000049727	Termination Head, KC4.4-12, ID1 1/2 x 8 + 8HL, Stabcon 1.4, Dynamic Umbilical, Miocene DR
P6000041756	Termination Head, KC4.4-12, ID1 1/2 x 8 + 8HL, Stabcon 1.4, Static Infield Umbilical, Miocene, FPSO side
P6000041759	Termination Head, KC4.4-12, ID1 1/2 x 8 + 8HL, Stabcon 1.4, Static Infield Umbilical, Miocene, Tree side

HUB INBOARD, KC4.4-12,
STABCON 1.4 UNINSULATED

HUB INBOARD, KC4.4-12,
MULTIBORE, STABCON 1.4

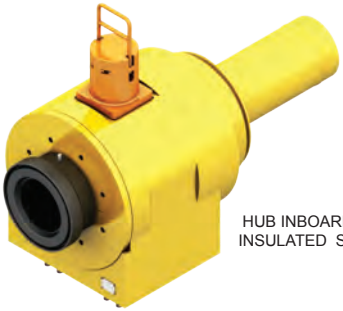

HUB INBOARD, KC4.4-12,
INSULATED STABCON 1.4

13.2 Stabcon Hubs

Stabcon Hubs, Uninsulated

P/N	Description
P6000046605	Hub Inboard, KC4.4-12, ID10, Stabcon 1.4 FLET I10, I20 and I40
P6000047992	Hub Inboard, KC4.4-12, ID8, Stabcon 1.4 FLET I30, I45 and GE
P6000048511	Hub Inboard, KC4.4-12, ID6, Stabcon 1.4 FLET I20, I30 and Dead Leg
P6000041941	Hub Inboard, KC4.4-12, ID8, Stabcon 1.4, SIV Manifold
P6000048255	Hub Inboard, KC4.4-12, ID8, Floating, Stabcon 1.4, SIV Manifold
P6000049163	Hub Inboard, KC4.4-12, ID10, Swivel, Stabcon 1.4, P10, P20, P30 and P40 (Temporary Scope)
P6000051742	Hub Inboard, KC4.4-12, ID6, Stabcon 1.4, Riser gas for parking structure P10, P20, and P30 (Temporary Scope)
P6000051744	Hub Inboard, KC4.4-12, ID10, Stabcon 1.4, P10, P20, and P30 (Temporary Scope)

Stabcon Hubs, Multibore

P/N	Description
P6000040409	Hub Inboard, KC4.4-12, ID1 1/2 x 10 + 8HL, Stabcon 1.4, SPS Manifold
P6000041933	Hub Inboard, KC4.4-12, ID1 1/2 x 8 + 8HL, Stabcon 1.4, UCM, UDM and UTP

Stabcon Hubs, Insulated

P/N	Description
P6000048374	Hub Inboard, KC4.4-12, ID10, Stabcon 1.4, Insulated, FLET P10, P20 and P30
P6000056426	Hub Inboard, KC4.4-12, ID10, Stabcon 1.4, Insulated, FLET IPB and P40
P6000046169	Hub Inboard, KC4.4-12, ID10, Floating, Stabcon 1.4, Insulated, Manifold Oligocene

Reinstallable HP Caps Stabcon 1.4

P/N	Description
P6000041761	Cap inboard, HP metal, reinstallable, KC4.4-12, ID10, Stabcon 1.4
P6000041762	Cap inboard, HP metal, reinstallable, KC4.4-12, ID8, Stabcon 1.4

P6000047544 CAP OUTBOARD HP ELASTOMER KC4-12, STABCON 1.4 (UNINSULATED FLOWLINE TERMINATION HEADS)
P6000055643 CAP OUTBOARD HP ELASTOMER KC4-12D, ID8, STABCON 1 (PLEM 17D CONNECTOR)

P6000040410 CAP OUTBOARD HP UMBILICAL HP ELASTOMER KC4.4-12 ID 1 1/2 x 10 + 8HL (UTHP)

P6000040411 MULTIBORE ID 1 1/2 x 8 + 8HL
P6000041770 MONOBORE ID 10”
P6000041787 MONOBORE ID 8”
CAP INBOARD LP ELASTOMER KC4.4-12 (FLOWLINE AND UMBILICAL)

P6000051565 CAP INBOARD, HP METAL REINSTALLABLE, VERTICAL (MANIFOLD AND IN-LINE TEE)

P6000041735 HP METAL, ID 6, I10, I20 INJECTION LINE, DEAD LEG
P6000052106 HP ELASTOMER, ID 10, IPB AND P40
P6000060342 HP ELASTOMER, ID 8, INJECTION FLET, I30, I45 AND GE
CAP INBOARD HP METAL/ELASTOMER KC4-12, STABCON 1.4 (FLOWLINE)

13.3 Protection Caps

CAP OUTBOARD PROTECTION
KC4.4-10 ID6, VECON 2.4

P6000054010 CAP INBOARD
TEMPORARY PROTECTION,
VECON 2.4

P6000041825 CAP OUTBOARD HP
ELASTOMER KC4.4-12 STABCON
1.4FOR INSULATED TERMINATION
HEAD (FLOWLINE)

P6000071579 CAP INBOARD
TEMPORARY PROTECTION
(FLOWLINE AND UMBILICAL)

P6000041768 CAP INBOARD
LP ELASTOMER KC4.4-10, ID6,
VECON 2.4 (XT)

HFL MQC-13 MK-II, BOTH ENDS, 5 LINE 2HP, 2LP, 1CH, 92m LONG,

Cobra Head's connected to P40 electrical cable, SIV-P40

P/N	Description
P6000045134	Cobra-Head, Upstream - SIV END, 4EC, 4 ACT, No hydraulics
P6000055393	Cobra-Head, Downstream - P40 END, 4EC, 4 ACT, No hydraulics

Cobra Head's connected to static umbilical

P/N	Description
P6000055392	Cobra-Head, Upstream , 5L: 2 HP, 2 LP, 1 CH, 3 EC, 3 ACT
P6000055393	Cobra-Head, Downstream, 5L: 2 HP, 2 LP, 1 CH, 3 EC, 3 ACT
P6000055395	Cobra-Head, Downstream - SIV END, 5L: 2 HP, 2 LP, 1 CH, 3 EC, 3 ACT

13.4 Typical Cobra Head

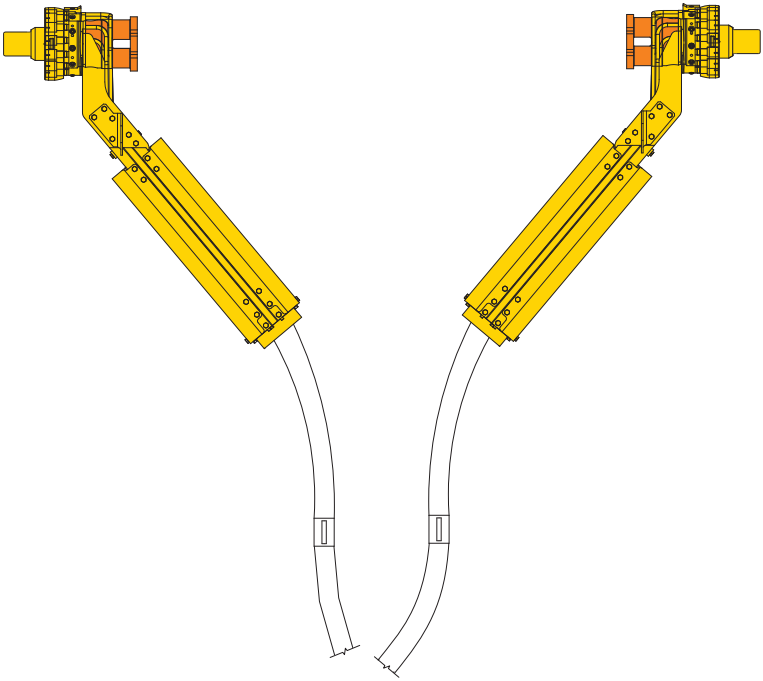

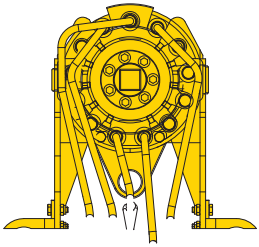

HFL MQC-13 MK-II, BOTH ENDS, 5
LINE 2HP, 2LP, 1CH, 92m LONG,
UTI - INJ. XT GA/CONFIG
MINIMUM BEND RADIUS:
SERVICE: 2.04m
STORAGE: 1.36m

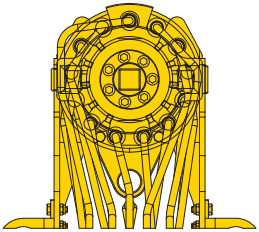

HFL MQC-13 MK-II, BOTH ENDS, 13
LINE 2HP, 2LP, 6MI, 3CH, 103m LONG,
MAN/UDM/UTP/UCM -
PROD. XT GA/CONFIG
MINIMUM BEND RADIUS:
SERVICE: 1.16m
STORAGE: 0.77m

13.5 Hydraulic Flying Leads

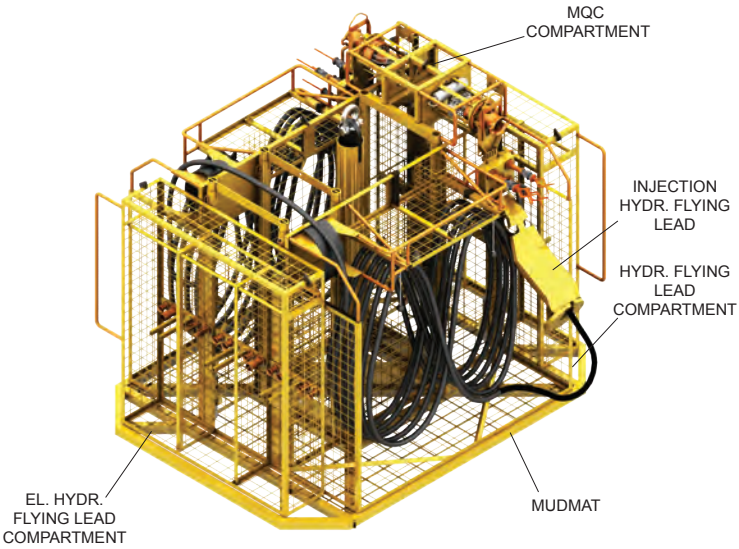

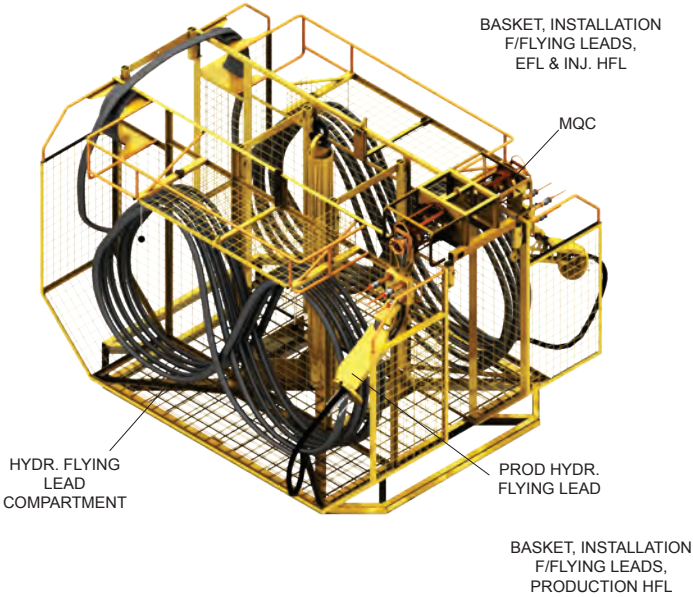

13.6 HFL and EFL Basket

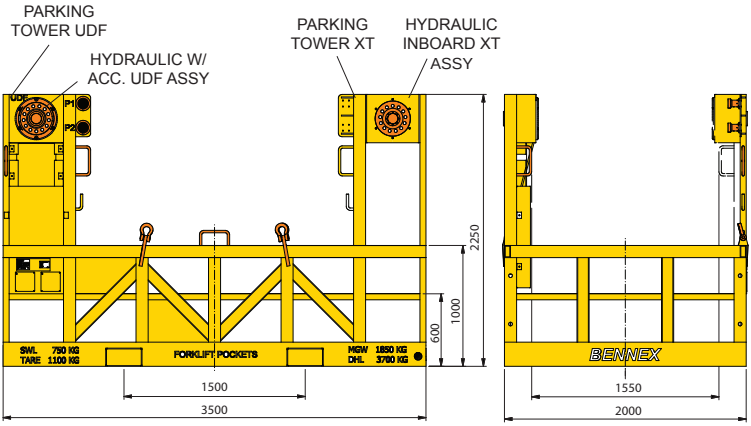

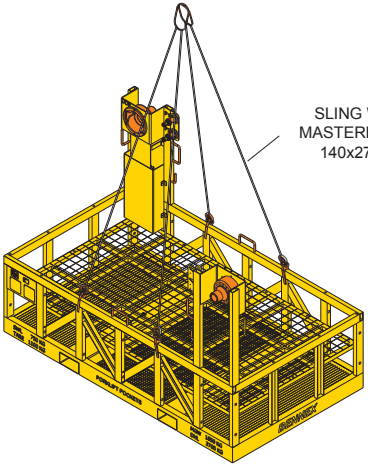

13.7 UDF Jumper Installation Basket

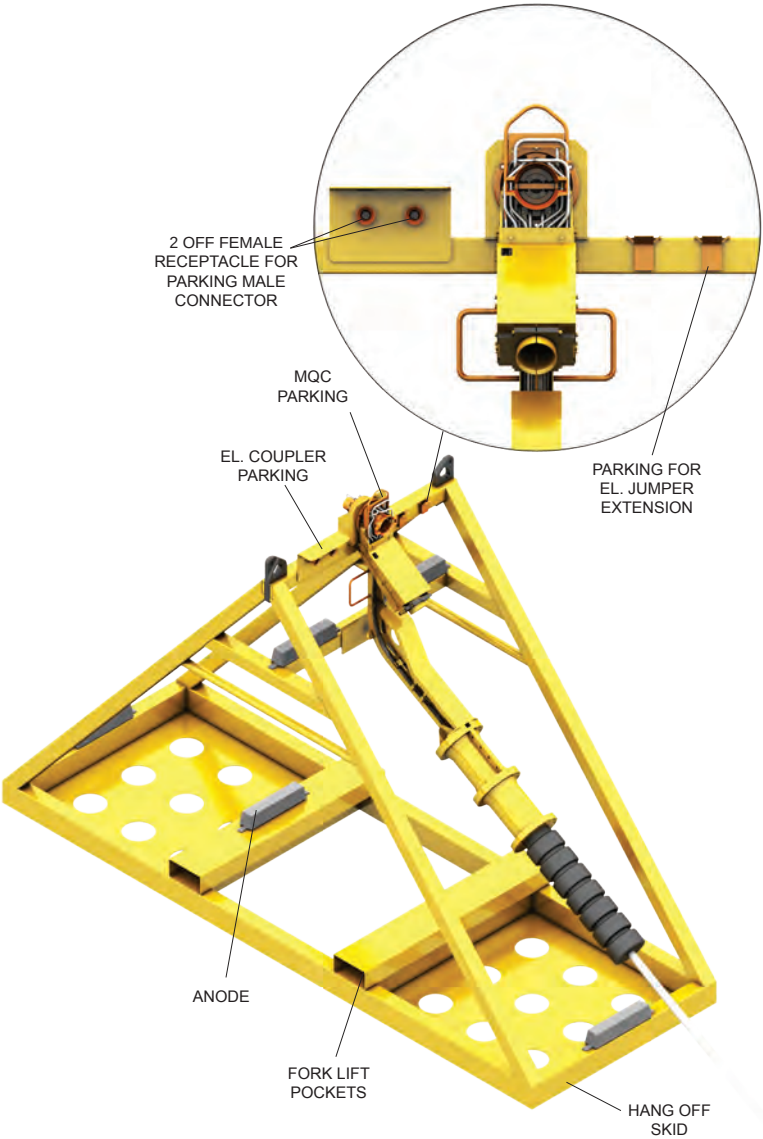

13.8 Parking Structure

14 Tables

EQUIPMENT DESCRIPTION	PART NUMBER	Width (mm)	Length (mm)	Height (mm)	Weight (kg)
TOPSIDE ELECTRICAL EQUIPMENT					
Subsea Power and Communication Unit, SPCU200E (SPS 40)	P6000046557	806	835	2195	600
Subsea Power and Communication Unit, SPCU200E (SPS 10)	P6000046558	806	835	2195	600
Subsea Power and Communication Unit, SPCU200E (SPS 20)	P6000046559	806	835	2195	600
Subsea Power and Communication Unit, SPCU200E (SPS 30)	P6000046560	806	835	2195	600
SCU 200, PANEL, Marshalling Cabinet HPU	P6000044483	1000	1020	2560	750
SCU 200, PANEL, SUBSEA CONTROL CABINET 1	P6000044482	1000	1020	2560	750
SCU 200, PANEL, SUBSEA CONTROL CABINET 2	P6000044483	1000	1020	2560	750
SCU 200, PANEL, SUBSEA CONTROL CABINET 3	P6000044484	1000	1020	2560	750
SCU 200, PANEL, SUBSEA CONTROL CABINET 4	P6000044485	1000	1020	2560	750
SCU 200, PANEL, SUBSEA CONTROL CABINET 5	P6000044486	1000	1020	2560	750
SDPU - SUBSEA DATA PROCESSING UNIT, CABINET	P6000055338	806	1006	2230	500
SWIMS, TOPSIDE	P6000042645	430	287	40	127
SWIMS, SUBSEA	P6000042644	ø 279		1380	80
SPCTU 200, E, 620 VAC	P6000046536	575	930	800	125
SMART TOOL 200, LAPTOP	P6000051561	400	600	250	15
TOPSIDE HYDRAULIC EQUIPMENT					
Hydraulic Power Unit, HPU	P6000043464	2500	5000	2900	10000
Test & Flushing HPU, TFHPU Ex	P6000045329	1500	1500	2000	2000
Test & Flushing HPU, TFHPU, Non Ex	P6000043468	1500	1500	2000	2000
SUBSEA DISTRIBUTION					
INFIELD UMBILICAL, P40 Electrical Cable	P6000056902	ø 60.5	3600		26000
ELECTRICAL JUMPER, 1 X 1 LEGS, F/ DISTRIBUTION, COBRA HEAD EC2-PRODUCTION RISER EC2	P6000058277	ø 13/20	53		10.6
ELECTRICAL JUMPER, 1 X 1 LEGS, F/ DISTRIBUTION, COBRA HEAD EC3-PRODUCTION RISER EC3	P6000058278	ø 13/20	53		10.6
ELECTRICAL JUMPER, 1 X 1 LEGS, F/ DISTRIBUTION, COBRA HEAD EC4-PRODUCTION RISER EC4	P6000058288	ø 13/20	53		10.6
ELECTRICAL JUMPER, 1 X 1 LEGS, F/ DISTRIBUTION, COBRA HEAD EC1-PRODUCTION RISER EC1	P6000052340	ø 13/20	53		10.6

14.1 Weight and Dimensions

EQUIPMENT DESCRIPTION	PART NUMBER	Width (mm)	Length (mm)	Height (mm)	Weight (kg)
SUBSEA CONTROL MODULE SYSTEM					
SCM MK III, 620, PXT, PAZFLOR SPS	P6000042968	ø 855		1777	1354
SCM MK III, 620, IXT, PAZFLOR SPS	P6000042969	ø 855		1777	1354
SCM MK III, 620, MAN/SIV, PAZFLOR SPS	P6000042970	ø 855		1777	1354
SCMMB MK III, TEST & FLUSHING PLATE, PAZFLOR	P6000042980	ø 852		1625	550
SCM DUMMY, MK III, PAZFLOR	P6000042981	ø 855		1785	700
SCM TEST STAND	P6000042979	ø 2000	2400	2100	1500
WELLHEAD SYSTEM					
UWD-15, CONDUCTOR HSG WELDMENT, 36-15K	P2000008234	ø 946	11004		12674
UWD-15, WELLHEAD HSG WELDMENT, 18-3/4-15K H4 PROFILE	P2000008235	ø 801	7990		5000
UWD-15, CASING HANGER ASSY W/ PUP JT, 18 3/4 X 14, VAM TOP KB	P2000008237	ø 471	6440		922
UWD-15, CASING HANGER ASSY W/ PUP JT, 18 3/4 X 10 3/4, SHORT NECK, VAM TOP KS	P2000008238	ø 471	6462		711
UWD-15 SPACER SLEEVE ASSY, W/ INCREASED FLOWBY F/ 18 3/4 X 10 3/4, 9 7/8 & 9 5/8 CASING HANGERS	P205457-0019	ø 471	533		281
UWD-15 M2M ANNULUS SEAL ASSY, F/ 18 3/4 10/15K	P205799	ø 471	298		55
UWD-15 ALTERNATE PACKOFF ASSY, 18 3/4	P205871	ø 471	286		55
WELLHEAD TOOLS CONTAINER	P2000011121	2468	2889	3156	6383
UWD-15, BORE PROTECTOR ASSY, 18	18-909-066	ø 471	1220		155
UWD-15, WEAR BUSHING ASSY, 18 3/4 W/ 12.	P2000000631	ø 470	963		616
UWD-15, WEAR BUSHING ASSY, 18 3/4 X 10 3/4	DP-18-4774	ø 470	922		538
SUPPORT PLATE ASSY, F/ CONDUCTOR HOUSING	P2000005301	1256	168		207
UWD ASSEMBLY 30/36/26 WELLHEAD HOUSING F	P114944-0019	ø 965	180		543
UWD, ASSY, F/ 18 3/4 HANG OFF PLATE TOOL	P2000009684	ø 1460	200		1555
UWD ASSEMBLY, 18 3/4 IN WELLHEAD FALSE R	P114942-0019	ø 717	168		194
UWD, ASSY, EMERGENCY DRILL PIPE HANGOFF (EDPHOT) ASSEMBLY	P2000010165	ø 470	876		995
EDPHOT EXTENSION SUB, EMERGENCY DRILL PIPE HANGOFF TOOL	P2000012088	ø 254	3860		338
LANDING SUB: F/ EMERGENCY DRILL PIPE HANGOFF TOOL	18-922-108	ø 168	567		82
SHIPPING CONTAINER ASSY, F/ DRILL AHEAD TOOL (DAT)	P2000007370	2427	3072	1370	2867 w/2xDAT 8639

EQUIPMENT DESCRIPTION	PART NUMBER	Width (mm)	Length (mm)	Height (mm)	Weight (kg)
SHIPPING BASKET ASSY, F/ WELL-HEAD HOUSING, WITH RUNNING TOOL INSTALLED C/W EXTENSION JOINTS AND CONNECTORS	P2000005531	1200	10500	1335	4100
TEMPORARY ABANDONMENT CAP ASSY, 18 3/4 H4 PROFILE, ROV STYLE, ROV RUN & RETRIEVED	P2000002521	ø 959	466	1446	81
TEMPORARY ABANDONMENT CAP ASSY, 18 3/4 H4 PROFILE, ROV STYLE, TRASH CAP	P144423	ø 848	815		54
UWD-15, WEAR BUSHING ASSY, 18 3/4 X 14 W/ HEAVY WALL PROTECTOR R/W 18-3/4 WH RT MIN BORE, 12.689	P2000010846	ø 471	1223		581
LIFTING SUB, API 4 1/2 IF (NC50) BOX TOP	P2000012890	ø 162	1027		65
LIFTING SUB, 6 5/8 API REG BOX TOP X 6 5/8 API REG PIN BTM X 41 LG	P2000012892	ø 206	1041		153
LIFTING SUB, 4 1/2 API REG BOTTOM BY LIFTING PADEYE FOR BOLT TYPE ANCHOR SHACKLE. SWL 50 TONS	18-222-258	ø 158	343		51
LIFTING SUB, 6 5/8 API REG BOTTOM BY LIFTING PADEYE FOR BOLT TYPE ANCHOR SHACKLE. SWL 50 TONS	18-222-275	ø 195	356		39
SHACKLE, BOLT-TYPE ANCHOR, 2 IN NOM SIZE	18-322-729	112	264	347	19
WH RUNNING TOOLS					
UWD-15, 30 CONDUCTOR H0USING RUNNING/RETRIEVAL TOOL, DRILL AHEAD W/10 BORE INNER SLEEVE, 6 5/8 API REG BOX UP X PIN DOWN	P134380-0021	ø 743	2362		2886
30 WELLHEAD HOUSING CAM STYLE MANUAL RUNNING TOOL ASSY, API 6-5/8 REG BOX UP API NC50 (4-1/2 IF) PIN DOWN, TYPE 2 W/ SEAL RING ASSY	P202044-0021	ø 743	1775		2.044
UWD-15, ASSY, 18-3/4 WELLHEAD HOUS-ING CAM STYLE MANUAL RUNNING TOOL. API 6-5/8 REG BOX UP X NC50 (4-1/2 IF) PIN DOWN	DP-18-3540	ø 472	1651		980
UWD-15, 18 3/4 WELLHEAD HOUSING RUNNING TOOL, STOP RING	18-910-219	ø 597	106		74
UWD-15, 18 3/4 SPRING LOADED TOOL, NC50 BOX UP X PIN DOWN	18-920-138	ø 470	1059		588
UWD-15, SINGLE TRIP TOOL ASSY W/ WASHOUT FACILITY, NC50 BOX UP X PIN DOWN	P206128	ø 471	2095		890
UWD-15, ASSY, F/ 18 3/4 ANNULUS SEAL ASSY RUNNING TOOL, (ASART), NC 50 BOX UP X NC 50 PIN DOWN	P205896	ø 471	1575		658
UWD-15, 18 3/4 CEMENT CLEAN OUT TOOL, ASSY, NC50 PIN UP X BOX DOWN	18-922-059	ø 470	738		431

EQUIPMENT DESCRIPTION	PART NUMBER	Width (mm)	Length (mm)	Height (mm)	Weight (kg)
UWD, WASH OUT TOOL, W/ STANDARD LENGTH BULLNOSE, NC50 CONNECTION, NOZZLES F/MUD OR BRINE	DP-48-5075	ø 165	2204		275
UWD, GUIDE FRAME ASSY, ROV ABUTMENT PLATE W/ STD SLOTTED ROV RECEPTACLE F/API 17D CLASS 1 THRU 4, F/ 10IN. DRILL AHEAD TOOL AND 30/36IN. CONDUCTOR HOUSING RUNNING TOOL	P2000011016	ø 914	584		298
UWD-15, ASSY, 30/36 DRILL AHEAD TOOL - DAT W/ CONTINGENCY RELEASE, 10 INCH BORE INNER SLEEVE, 6-5/8 REG BOX UP X PIN DOWN	P2000017963	ø 813	2647		3291
TUBING HANGER SYSTEM					
TH ASSY, CONCENTRIC, EHXT, 7-10K, PRODUCTION WITH IWC	P2000009611	ø 472	5243		1869
TH ASSY, CONCENTRIC, EHXT, 7-10K, PRODUCTION	P2000009613	ø 472	5243		1869
TH ASSY, CONCENTRIC, EHXT, 7-10K, WATER INJECTION	P2000011009	ø 472	5243		1869
TH ASSY, CONCENTRIC, EHXT, 7-10K, GAS INJECTION	P2000009617	ø 472	5243		1869
TH ASSY, CONCENTRIC, EHXT, 7-10K, WATER INJECTION WITH IWC	P2000009619	ø 472	5243		1869
UPPER CROWN WIRELINE PLUG ASSY, 7-10K, 6.633 METAL METAL	P2000011073	ø 170	462		48
LOWER CROWN WIRELINE PLUG ASSY, 7-10K, 6.370 METAL METAL	P2000011072	ø 163	463		47
ROV TREE CAP, EHXT, ASSY, TUBING HANGER INDEPENDANT SECONDARY LOCK (INTERNAL THISL)	P207285	ø 471	313		62
TH Test Equipment					
TOP TEST CAP ASSY, F/ THRT, CLAMP HUB PROFILE, 7 INCH - 10K EHXT, NO DOWNHOLE	P208166	ø 470	780		470
BOTTOM TEST CAP ASSY, F/ THRT, AND THMRT	P2000008988	ø 639	644		388
CHARGE TOOL, EH-5, 5 HYD LINE(S), 15000 PSI	P2000004954	482	203	147	26
TEST STAND ASSY, F/ TUBING HANGER, DECK STORAGE STAND W/ SLING	P2000011151	1016	1168	1036	760
TEST CAP BODY, F/ TUBING HANGER, PUP JOINT	P2000004365	No DWG avaiable			12
TH Handling Equipment					
TUBING HANGER HANDLING TOOL ASSY, 10K F/18 3/4 OD	P207321	ø 450	1310		510
LIFTING SUB, 4-1/2 NC50 33 TONNES SWL	DP-51-1392	ø 163	444		150

EQUIPMENT DESCRIPTION	PART NUMBER	Width (mm)	Length (mm)	Height (mm)	Weight (kg)
HANDLING TOOL ASSY, F/ TUBING HANGER, 18	P2000011138	ø 470	83		35
TUBING HANGER ASSY, SHIPPING FRAME ASSEM	P2000008357	762	8310	1072	3889
DNV CG3 SHIPPING POD WITH SLING SET	P205907	ø 508	2160		873
STORAGE POD ASSY F/TUBING HANGER EMERGENCY RELEASE TOOL	DP-18-5018	ø 559	1549		685
PROTECTOR CAN ASSY, F/ 18 3/4 TOOLS, DNV CG3 SHIPPING POD W/ SLING SET	P2000003176	ø 559	2438		969
DNV CG3 SHIPPING POD WITH SLING SET	P202717-2051	ø 559	1270		527
TH Installation Equipment					
WIRELINE ISOLATION SLEEVE, SUPPLIED BY HALLIBURTON	P2000011076	ø 168	1238		62
INSTALLATION / REMOVAL TOOL ASSY, F/ ASSEMBLY OF INTERNAL THISL	P208694	ø 152	375		30
TH SBMS, INSTALLATION / REMOVAL TOOL ASSY, F/ 18 3/4 OD	P207361	ø 625	1127		109
TUBING HANGER HANGOFF PLATE ASSY	P209403	ø 1378	247		1357
TUBING HANGER CONTINGENCY SEAL SET ASSY, EHXT, W/ SEAL SPACER TO SUIT TH BODY	P2000009559	ø 388	391		64
TH LOCK RING INSTALLATION/REMOVAL TOOL, ASSEMBLY	P139702-0000	ø 470		162	72
LOCK MANDREL TO UPPER BODY INSTALLATION/REMOVAL TOOL ASSY	P139583-0000	ø 723	1054		130
WIRELINE NIPPLE PROTECTOR, 10K, SUPPLIED BY HALLIBURTON	P2000011078	ø 168	722		12
GUIDE FUNNEL ASSY, TUBING HANGER INTERVENTION GUIDE (THIG) ASSY	P2000011357	ø 470	2830		469
GUIDE FUNNEL ASSY, TUBING HANGER INTERVENTION, SAIPEM THIG	P2000017341	ø 470	2889		473
LONG NIPPLE PROTECTOR SUPPLIED BY HALLIBURTON	P2000015674	ø 168	1236		20
WIRELINE ISOLATION SLEEVE, SUPPLIED BY HALLIBURTON	P2000011076	ø 168	1238		62
TH Running Tools					
TUBING HANGER RUNNING/RETRIEVAL TOOL ASSY 10K F/ 18 3/4 OD	P207808	ø 470	1730		1397
TUBING HANGER WASHOUT TOOL ASSY, 7-10K F/ 18 3/4 OD	P208132	ø 406	1030		296
THISL RETRIEVAL TOOL ASSY, F/EHXT INTERNAL THISL	P208499	ø 855	1562		888
INTERNAL TREE CAP ASSY, THISL RUNNING TOOL ASSEMBLY, F/ HOT STAB, 10K SUPPLY	P2000010917	ø 855	1412		682

EQUIPMENT DESCRIPTION	PART NUMBER	Width (mm)	Length (mm)	Height (mm)	Weight (kg)
TUBING HANGER MECHANICAL RETRIEVAL TOOL ASSY, 7-10K F/ 18 3/4 OD, W/ 6 5/8 FH BOX TOP	P2000009744	ø 476	2286		1433
WIRELINE RETRIEVAL TOOL, SUPPLIED BY HALLIBURTON	DP-18-6174				34
WIRELINE PLUG RUNNING TOOL, SUPPLIED BY HALLIBURTON	DP-18-6100				
WIRELINE RETRIEVAL TOOL, SUPPLIED BY HALLIBURTON	DP-18-5198				
WIRELINE RUNNING / RETRIEVING TOOL, SUPPLIED BY HALLIBURTON	P209942				
WIRELINE RETRIEVAL TOOL, SUPPLIED BY HALLIBURTON	DP-18-6173				
ADAPTER ASSY, 6.0-4NA-2G PIN TOP X 7 IN. EMERGENCY TUBING HANG OFF TOOL	P2000012785	ø 179	914		112
UWD-15, ASSY, F/ EMERGENCY DRILL PIPE HANGOFF TOOL, LANDING SUB W/ NC50 BOX TOP AND 7.438-1 STUB ACME LH PIN BOTTOM	18-922-108	ø 168	567		82
UWD, EXTENSION SUB, EMERGENCY DRILL PIPE HANGOFF TOOL	P2000012088	ø 254	3861		338
COMPONENT, SET, 7-10K, CONCENTRIC EHXT T	P2000006423	ø 216	259		27
X-MAS TREE SYSTEM					
EHXT ASSY, GLL DL, 5 1/8 X 2 1/16-10K, PRODUCTION XT W/O IWC	P2000009820	4190	4902	4265	46110
EHXT ASSY, GLL DL, 5 1/8 X 2 1/16-10K, WATER INJECTION XT W/ IWC	P2000009821	4180	4856	4265	38663
EHXT ASSY, GLL DL, 5 1/8 X 2 1/16-10K, GAS INJECTION XT	P2000009822	4180	4856	4265	38611
EHXT ASSY, GLL DL, 5 1/8 X 2 1/16-10K, WATER INJECTION XT W/O IWC	P2000010726	4180	4856	4265	38548
DEBRIS CAP ASSY, 18 3/4 H4 PROFILE, ROV STYLE, ROV RUN & RETRIEVED	P2000015862	ø 951		836	90
EXTERNAL TREE CAP ASSY, 18 3/4, H4 PROFILE, WIRE RUN, PRODUCTION INSULATED CAP	P2000009825	ø 1264	1554		645
X-mas Test Equipment					
XT TEST STUMP , F/ XMAS TREE, H4 PROFILE, UWD-15 18-3/4 WELLHEAD HOUSING F/ XMAS TREE FAT & OFF-SHORE TESTING	P2000009829	3286	3286	2814	6080
TRANSPORTATION SKID, F/ XMAS TREE, C/W SLING ASSY	P2000009985	3302	3302	914	2800
X-mas Handling Equipment					
XT HANDLING TOOL TOOL ASSY, F/ ANY OD, F/ INTERNAL H4 PROFILE	P2000004562	ø 660		918	643
XT SLING, 55 TONNE SWL SLING LEG ASSY	P209331	640	9000		1814

EQUIPMENT DESCRIPTION	PART NUMBER	Width (mm)	Length (mm)	Height (mm)	Weight (kg)
X-mas Installation Equipment					
EXTERNAL TREE CAP ASSY, 18 3/4-10K, HYDRAULIC, TORUS IV	P2000016144	1473	2039	2247	7544
CROSSOVER SUB	P206344	ø 203	1028		157
LANDING SUB FOR EMERGENCY HANG-OFF OF DRILL PIPE	18-922-150	ø 222	568		100
X-mas Running Tools					
TREE RUNNING/RETRIEVAL TOOL ASSY W/ BORE PROTECTOR	P2000009828	ø 889	6091		1819
XTRT LIFTING SUB	P1000003329	ø 273	805		205
XTRT SHACKLE	P122864-0000		76	76	81
SLING ASSY 55 TONNE WLL, 1 LEG, WIRE, ROPE TYPE	P2000021923		3300		450
MECHANICAL RELEASE TOOL ASSY F/ TORUS III CONNECTOR & MTRT OVERRIDE	P2000013972	416	767	245	57
UWD, WASH OUT TOOL, W/ STANDARD LENGTH BULLNOSE, NC50 CONNEC-TION, NOZZLES F/MUD OR BRINE	DP-48-5075	ø 165	2204		275
COMPLETION BORE PROTECTOR, ASSY, F/ HXT	P207246	ø 471	1766		949
HANDLING TOOL WELDMENT, FOR COMPLETION BORE PROTECTOR	P209793	ø 452	266		18
RIDGIDISING TOOL, CASING HANGER RIGIDISING MECHANISM ASSY	DP-18-5986	ø 262	4326		330
FX2 GASKET, METAL SEAL, FX-II ASSY, F/ 18 3/4-15K HUB OR H4, 316 SS	P1000062046	ø 570	127		39
VX GASKET, METAL SEAL, H4 / VX BODY, F/ 18 3/4-15K WELLHEAD, INCOLOY 825, SILVER PLATED	DP-73-0357	ø 570	101		38
PENETRATOR OVERRIDE TOOL, MECHANICAL RELEASE TOOL, ASSY, F/ HORIZONTAL TREE RADIAL PENETRA-TOR	P145468	NA	NA	NA	32
LAOT, M3000 LINEAR ACTUATOR OVER-RIDE TOOL	P2000021487	ø 246	437		46
XT MECHANICAL RELEASE TOOL, F/ 18-3/4 15K TORUS IV CONNECTOR	P211104	ø 122	2237		2893
WORKOVER SYSTEM					
XT UMBILICAL AND REEL, UNIT A, PAZFLOR	P6000042605	4039	4968	4022	20084
SHEAVE, XT UMBILICAL SYSTEM, PAZFLOR	P6000042607	407	1929	2187	466
XT UMBILICAL AND REEL, UNIT B, PAZFLOR	P6000042606	407	1929	2187	466
XT UMBILICAL BASKET, PAZFLOR	P6000042608	2464	4153	2064	NA
XT UMBILICAL AND REEL, UNIT C, PAZFLOR	P6000058551	407	1929	2187	466

EQUIPMENT DESCRIPTION	PART NUMBER	Width (mm)	Length (mm)	Height (mm)	Weight (kg)
XT UMBILICAL AND REEL, UNIT D, PAZFLOR	P6000058553	407	1929	2187	466
IWOCS, HPU, UNIT A, PAZFLOR	P6000042603	2448	7600	2860	25000
IWOCS, HPU, UNIT B, PAZFLOR	P6000042604	2448	7600	2860	25000
HYDRAULIC FLYING LEAD, MQC-13 MKII BOTH	P6000043231	483	25	678	165
Riser Subsea Equipment					
GN S12K - GOOSENECK, SINGLE UMBILICAL, ASSY, PAF S12K	P6000057799	658	2732	1628	920
GN PAF - GOOSENECK, SINGLE UMBILICAL, ASSY, PAF	P6000056901	1048	2714	1645	1000
Clamps PAF	P6000055727	179	211	187	10
Clamps S12K	P6000058258	146	211	462	10
MANIFOLD AND TEMPLATE					
MSS - FOUNDATION, MANIFOLD SUPPORT STRUCTURE, MSS9, ASSY	P6000041535	12698	15042	7549	65400
CCF - FOUNDATION, CLOSED CAISSON, CCF7, ASSY	P6000041534	ø 7500		14183	62500
GUIDEPOST, L=6350	100004041	ø 238	6617		956
GUIDEPOST, L=3650	100004042	ø 238	3917		550
MANIFOLD, INSTALLATION, M41, PAZFLOR SPS	P6000043521	9145	10206	4097	106956
MANIFOLD, INSTALLATION, M42, PAZFLOR SPS	P6000043522	9145	10206	4637	106956
MANIFOLD, INSTALLATION, M43, PAZFLOR SPS	P6000043523	10042	10206	4097	106956
PLM, ASSY	P6000041413	4140	6078	2785	17775
PLM, TRANSPORTATION SKID, ASS	P6000056216	4502	4550	2675	2990
PGB, S1, ASSY	100037009	2556	6195	3328	18340
PGB, ROV DOCKING PLATFORM, ASSY	100007756	2490	2908	1448	2493
PGB, COUNTER WEIGHT, ASSY	100015369	1685	2496	1410	3551
PGB, ROTATION AND RETRIEVAL TOOL, ASSY	100002390	2105	2285	568	1360
UMBILICAL - PRIMARY					
UTI, ASSY	P6000041726	2800	3500	2502	5480
UDM, 101, ASSY	P6000041727	8075	10276	7849 10384	54800
UDM, 201, ASSY	P6000046279	8075	10276	7849 10384	55900
UDM, 301, ASSY	P6000046280	8075	10276	7849 10384	55500
GUIDEPOST, L=6350	100004041	ø 238	6617		956
GUIDEPOST, L=3650	100004042	ø 238	3917		550
UCM, 102, ASSY	P6000041728	8068	10276	7549 10084	47500

EQUIPMENT DESCRIPTION	PART NUMBER	Width (mm)	Length (mm)	Height (mm)	Weight (kg)
UCM, 302, ASSY	P6000046281	8068	10276	7549 10084	47400
UTP, 10111, ASSY	P6000046274	8071	10276	7549 10084	44200
UTP, 10211, ASSY	P6000043001	8071	10276	7549 10084	44600
UTP, 20111, ASSY	P6000046275	8071	10276	7549 10084	44100
UTP, 20121, ASSY	P6000046276	8071	10276	7549 10084	43800
UTP, 30111, ASSY	P6000046277	8071	10276	7549 10084	44200
UTP, 30211, ASSY	P6000046278	8071	10276	7549 10084	44400
TERMINATION HEAD KC4.4-12, ID 1 1/2X10 + 8HL, STABCON 1.4, ASSY STATIC UMBILICAL, OLIGOCENE, FPSO SIDE	P6000041994	1700	4376	2785	6901
TERMINATION HEAD KC4.4-12, ID 1 1/2X10 + 8HL, STABCON 1.4, ASSY STATIC UMBILICAL, OLIGOCENE, DR	P6000049728	1700	4376	2785	6900
TERMINATION HEAD KC4.4-12, ID 1 1/2X10 + 8HL, STABCON 1.4, ASSY STATIC UMBILICAL INFIELD, OLIGO-CENE, TREE SIDE	P6000041996	1700	4376	2785	6900
SEAL PLATE, KC4.2-12, ID 1 1/2X10 + 8HL,	P6000041972	ø 424	75.5		16
CAP INBOARD, LP ELASTOMER, KC4.4-12, ID 1 1/2X10 + 8HL, STABCON 1.4	P6000040411	ø 588	200		61
TERMINATION HEAD KC4.4-12, ID 1 1/2X8 + 8HL, STABCON 1.4, ASSY, DYNAMIC UMBILICAL, MIOCENE DR	P6000049727	1700	4376	2785	6755
TERMINATION HEAD KC4.4-12, ID 1 1/2X8 + 8HL, STABCON 1.4, ASSY, STATIC INFIELD, MIOCENE, FPSO SIDE	P6000041756	1700	4376	2785	6754
TERMINATION HEAD KC4.4-12, ID 1 1/2X8 + 8HL, STABCON 1.4, ASSY, STATIC INFIELD MIOCENE, TREE SIDE	P6000041759	1700	4376	2785	6756
CAP OUTBOARD, HP ELASTOMER, KC4.4-12, ID 1 1/2X10 + 8HL, STABCON 1.4, ASSY	P6000040410	ø 426	178		98
MQC-13 (MKII), OUTBOARD SEAL CAP, F/ 13 LINES, PRODUCTION SYSTEMS	P6000044814	ø 260	500		33
MQC-13 (MKII), OUTBOARD SEAL CAP, F/ 5 L LINES, INJECTION SYSTEMS	P6000044817	ø 260	500		33
PROTECTION CAP (PLASTIC), MQC MKII	100017910	ø 260	381		3
SEAL PLATE, KC4.2-12, ID 1 1/2X10 + 8HL, ASSY BLIND	P6000060253	ø 424	40		18

EQUIPMENT DESCRIPTION	PART NUMBER	Width (mm)	Length (mm)	Height (mm)	Weight (kg)
Test Equipment					
CAP INBOARD, TEST, KC4-12, ID 1 1/2X10 + 8HL, STABCON 1.4, ASSY	P6000041826	ø 699	288		429
Installation Equipment					
SKID, HANDLING F/ FLYING LEADS, SUBSEA, SINGLE MQC, TEMPORARY, HANG OFF, ASSY	P6000057765	2300	6600	4445	3287
Hydraulic Jumpers					
HYDRAULIC FLYING LEAD, MQC-13 MKII BOTH ENDS, 13-LINE, 2 HP, 2 LP, MAN/ UDM/ UTP/ UCM - PROD. XT	P6000045067	ø 260	9200		672
HYDRAULIC FLYING LEAD, MQC-13 MKII BOTH ENDS, 5-LINE, 2 HP, 2 LP, 1 CH, UTI - INJ. XT	P6000045069	ø 260	9200		360
HYDRAULIC FLYING LEAD, MQC-13 MKI BOTH ENDS, 13-LINE, 2 HP, 2 LP, 6 MI, 3 CH, MAN/ UDM/ UTP/ UCM - PROD. XT	P6000045068	ø 260	10300		1395
HYDRAULIC FLYING LEAD, MQC-13 MKII BOTH ENDS, 5-LINE, 2 HP, 2 LP, 1 CH, UTI - INJ. XT	P6000060419	ø 260	10300		587
Electrical Flying Leads					
ELECTRICAL JUMPER, 1 X 2 LEGS, F/ DISTRIBUTION, UTI EC - 2X SCM EC	P6000044917	ø 76	1-3900 2-9400 3-9400	393	
ELECTRICAL JUMPER, 1 X 2 LEGS, F/ DISTRIBUTION, UTI EC - 2X SCM EC	P6000044918	ø 76	1-3900 2-9400 3-9400	393	
SENSOR HARNESS, 1 X 1 LEGS, F/ SENSORS, EC - PT/TT	P6000044948	1-ø 76 2-ø 87	3	1-193 2-372	
SENSOR HARNESS, 1 X 1 LEGS, F/ SENSORS, EC - PT/TT	P6000044949	1-ø 76 2-ø 87	3	1-193 2-372	
SENSOR HARNESS, 1 X 1 LEGS, F/ SENSORS, EC - PT/TT	P6000044950	1-ø 76 2-ø 87	3	1-193 2-372	
SENSOR HARNESS, 1 X 1 LEGS, F/ SENSORS, EC - PT/TT	P6000044951	1-ø 76 2-ø 87	3	1-193 2-372	
SENSOR HARNESS, 1 X 1 LEGS, F/ SENSORS, EC - PT/TT	P6000044896	1-ø 76 2-ø 87	3	1-193 2-372	
SENSOR HARNESS, 1 X 1 LEGS, F/ SENSORS, EC - PT/TT	P6000044897	1-ø 76 2-ø 87	3	1-193 2-372	
Cobraheads					
COBRA-HEAD, ASSY, MQC-13 MK2 ONE END, 5-LINE, 2 HP, 2 LP, 1 CH, 3 EC, 3 ACT, UPSTREAM, ASSY	P6000055392	1509	2153	2404	223
COBRA-HEAD, ASSY, MQC-13 MK2 ONE END, 5-LINE, 2 HP, 2 LP, 1 CH, 3 EC, 3 ACT, DOWNSTREAM - EFL, MECH. ASSY	P6000055393	1509	2153	2404	236

EQUIPMENT DESCRIPTION	PART NUMBER	Width (mm)	Length (mm)	Height (mm)	Weight (kg)
COBRA-HEAD, ASSY, MQC-13 MK2 ONE END, 5-LINE, 2 HP, 2 LP, 1 CH, 3 EC, 3 ACT, DOWNSTREAM - SIV END, MECH. ASSY	P6000055395	1509	2153	2404	223
Flow line and Well Jumper					
SIV, GAS EXPORT MODULE, ASSY	P6000041725	8071	10276	7549 10084	53800
HUB INBOARD, KC4.4-12, ID 10, STAB-CON 1.4, FLET (I10, I20, I40)	P6000046605	ø 426	1715	1135	1130
HUB INBOARD, KC4.4-12, ID 10, STAB-CON 1.4, INSULATED, FLET, (P10, P20, P30)	P6000048374	ø 426	1715	1378	1504
HUB INBOARD, KC4.4-12, ID 8, STABCON 1.4, FLET (I30, I45, GE)	P6000047992	ø 426	1696	1135	1183
TIE-IN PORCH, STAB RECEPTACLE, STABCON 1 / 1.4, F/ RIGID SPOOL / PIG LOOP	P6000042558	1350		1500	1231
CAP OUTBOARD, HP ELASTOMER, KC4.4-12, ID 10, STABCON 1.4, FOR INSULATED TERM. HEAD	P6000041825	ø 426 ø 850	251		86
CAP INBOARD, LP ELASTOMER, KC4-12, ID 10, STABCON 1.4 STANDARD	P6000041770	ø 536 ø 591	206		68
CAP INBOARD, LP ELASTOMER, KC4-12, ID 8, STABCON 1.4, SIV	P6000041787	ø 536 ø 589	206		65
CAP INBOARD, HP METAL, REIN-STALLABLE, KC4.4-12, ID 10, 7.5K WP, STABCON 1.4	P6000041761	1890	2704	2785	5661
CAP INBOARD, HP METAL, REIN-STALLABLE, KC4.4-12, ID 8, 7.5K WP, STABCON 1.4	P6000041762	1890	2704	2785	5683
CAP INBOARD, HP METAL, REINSTALL-ABLE, KC4.2-10, ID 6, VECON 2.4	P6000051565	ø 470 ø 810	763		364
HUB INBOARD, KC4.4-10, ID 6, VECON 2.4, INSULATED; IN-LINE TEE	P6000047098	ø 355 ø 900	1484		1498
HUB INBOARD, KC4.4-10, ID 6, VECON 2.4, INJECTION IN-LINE TEE	P6000047092	ø 355 ø 900	1480		904
TERMINATION HEAD KC4.4-12, ID 10, STABCON 1.4, ASSY, PIG RECEIVER, PRODUCTION FLET, P10, P20, P30	P6000046535	1700	3349	2785	6524
TERMINATION HEAD KC4.4-12, ID 8, STABCON 1.4, PIG RECEIVER, GAS EXPORT, I30, I45	P6000046538	1700	3316	2785	5918
TERMINATION HEAD KC4.4-12, ID 10, STABCON 1.4, PIG RECEIVER, INJEC-TION FLET, I10, I20, I40	P6000046568	1700	3342	2785	6001
TERMINATION HEAD KC4.4-12, ID 6, STABCON 1.4, MIOCENE, INJECTION LINE, DEAD LEG, I10, I20	P6000048517	1700	3440	2785	6227
CAP OUTBOARD, HP ELASTOMER, KC4-12, ID6/	P6000047544	ø 426	188		63

EQUIPMENT DESCRIPTION	PART NUMBER	Width (mm)	Length (mm)	Height (mm)	Weight (kg)
TIE-IN PORCH, STAB RECEPTACLE, STABCON 1 / 1.4, F/ FLEXIBLE LINE, W/ HELIX 15 DEG, W/ GUIDE WIRE RECEPTACLE, LEFT	P6000043497	ø 1350	1500		1657
HUB INBOARD, KC4.4-12, ID 6, STABCON 1.4 (I10, I20)	P6000048511	ø 426	1685	1135	1233
TRANSPORTATION SKID ASSY, F/ TERMINATION HEAD, KC4.4-12, STABCON 1.4	P6000041948	2193	3900	2673	1623
TRANSPORTATION SKID ASSY, F/ TERMINATION HEAD, KC4.4-12, STABCON 1.4, WITH RIGID STAB	P6000060234	2193	3900	2673	1624
CAP INBOARD, HP METAL, KC4.4-12, ID 6, STABCON 1.4, I10, I20, INJECTION LINE, DEAD LEG	P6000041735	695	357		414
METAL SEAL, KX-10 IN, (256.4X60.0) MM, 10K WP, -40/+150 DEG C, 2500 M, MONO, IH	P6000012867	ø 288	60		5
METAL SEAL, KX-8 IN, (204.9 X 60.0MM), 5K WP, MONO, IH	P6000012800	ø 235	60		3
Cap,Inb KC4-12, R2, Temp. Prot. Incl. Seals	100044744	202	541		316
CAP INBOARD, PROTECTION, KC4-10, VECON 2	P6000054010	ø 460	233		23
METAL SEAL, KX-6 IN, (145.1 X 50.0MM), MONO, IL, BLIND, VECON	P6000052350	ø 167	50		7
MQC-13 (MKII), OUTBOARD SEAL CAP, F/ 5 L LINES, INJECTION SYSTEMS	P6000044817	ø 260	500		33
STAB RECEPTACLE ALIGNMENT JIG, STABCON 1.4	P6000051854	ø 1350	2295	1035	459
CAP INBOARD, HP ELASTOMER, KC4-12, ID 8, STABCON 1.4, INJECTION FLET, I30, I45, GE	P6000060342	692	237	611	409
HUB INBOARD, KC4.4-12, STABCON 1.4, PIPE INSULATION RING	P6000058754	ø 594	254		56
TERMINATION HEAD KC4.4-10, ID 6, VECON 2.4, INSULATED, MIOCENE PRODUCTION JUMPERS P10, P20 AND P30	P6000043396	ø 720	2370		1155
TERMINATION HEAD KC4.4-10, ID 6, VECON 2.4, (I10, I20, I30)	P6000041992	ø 520	2281		1002
TERMINATION HEAD KC4.4-10, ID 6, VECON 2.4, INSULATED, ASSY	P6000051845	ø 720	2370		1135
INTERVENTION SYSTEM					
STABCON 1.4 System					
CONNECTOR ACTUATION TOOL, CAT1.4	100059793	2100	3615	1261	3000
TOOL BASKET ASSY, F/ GENERAL USE, ROV TOOLS, STABCON 1.4	P6000041698	3650	4450	3257	4000
ROV TOOL, HUB CLEANING, KC4.4-12, STABCON 1.4, INSULATED/UNINSULATED INBOARD/OUTBOARD, MULTIBORE	P6000041642	759	1020	1021	78

EQUIPMENT DESCRIPTION	PART NUMBER	Width (mm)	Length (mm)	Height (mm)	Weight (kg)
ROV TOOL, HUB CLEANING, KC4.4-12, 1.4, INSULATED/UNINSULATED, INBOARD/OUTBOARD, MONOBORE	P6000041649	759	1020	1021	78
ROV TOOL, SEAL-REPLACEMENT, KC4.4-12, STABCON 1.4, INSULATED/UNINSULATED, OUTBOARD, MULTIBORE	P6000041643	759	1020	1024	64
ROV TOOL, SEAL-REPLACEMENT, KC4.4-12, STABCON 1.4, INSULATED/UNINSULATED, OUTBOARD, MONOB-ORE	P6000049517	759	1020	1024	78
ROV TOOL, CAP REMOVAL, KC4.4-12, INBOARD, INSULATED/UNINSULATED	P6000041655	518	780	851	73
ROV TOOL, CLAMP REMOVAL, KC4.4-12, INBOARD, INSULATED/UNINSULATED	P6000041881	571	642	564	64
INSTALLATION TOOL, TERMINATION HEAD, LIFTING YOKE, STABCON 1.4	P6000041717	1824	2213	2925	1065
OVERRIDE JACK PLM/YOKE	100008621	200	568	860	50
OVERRIDE JACK, CAT FLYING INTER-FACE	100012241	300	400	802	30
ROV TOOL, OVERRIDE JACK, STABCON 1.4, INSULATED/UNISULATED, TERMINA-TION HEAD LOCKING MECHANISM	P6000041644	220	550	377	36
VECON 2.4 System					
VCAT ASSY, VECON MK2	100031332	1540	1995	3291	5376
HUB CLEANING, KC4.4-10, VECON 2.4, INSULATED/UNINSULATED, INBOARD, MONOBORE	P6000041651	ø 400	740	300	28
HUB CLEANING, KC4.4-10, VECON, 2.4, INSULATED/UNINSULATED, OUBOARD, MONOBORE	P6000046896	ø 400	740	300	28
SEAL-REPLACEMENT, KC4.4-10, VECON 2.4, INSULATED/UNINSULATED, INBOARD, MONOBORE	P6000041653	ø 400	740	299	29
SECONDARY RELEASE TOOL, VECON	100033788	ø 85	277	339	9
TOOL BASKET ASSY, F/ ROV TOOLS, ADAPTER KIT FOR VECON 2.4 TOOLS, ASSY	P6000058218	670	2150	1277	101
GENERAL Tools					
WELLHEAD CLEANING, VX 18 3/4	P6000032617	ø 694	745	657	80
SEAL-REPLACEMENT, WELLHEAD VX	P6000011921	ø 517	480	329	18
EXTERNAL SEAL TEST KIT, ASSY	P6000039162	240	350	409	22
HUB INSPECTION CAMERA, MK.2	P6000046966	112	160	622	7
STAB 4L, 345 BAR, MALE, ASSY	100002110	130	440 522		4
TORQUE TOOL, API 17D CLASS 1-4 (2700 NM)	100035992	ø 149	599 540		37
REMOTE CONTROL UNIT, MK2	100035993	232	412 462	289	30

EQUIPMENT DESCRIPTION	PART NUMBER	Width (mm)	Length (mm)	Height (mm)	Weight (kg)
Jumper, Stab 6L, 207 bar w/tr.box (2,5 m hoses)	100046149		dh:460 fh: 540		20
Flying Lead Orientation Tool (FLOT)	100036811	476	1041	419	66
TORQUE TOOL, GEAR BOX, ISO 13628-8 CLASS 4-5	P6000052092	ø 340	373		37
LATCH UNIT TOOL, MULTI FUNCTIONAL, MK4	100014893	ø 245	975,5		70
TORQUE ADAPTER KIT, ASSY	100012558	ø 145 ø 88 ø 78	319 279 288		5
MODULE RUNNING TOOL, SUBSEA CONTROL MODULE, FOR SCM MK III	100015275	ø 1364	1477 1300	1937	1288
CHOKE RUNNING TOOL, MF dact. 25 deg	100040748	ø 724	1338 1665 C 1785 E		356
OVERRIDE JACK, KC4-3, TYPE 3	P6000034203	ø 397	740		43
SCM OVERRIDE TOOL, MKII	100029631	250	801 850		41
OVERRIDE JACK, MQC, MK2	7604322	ø 152	425	490 + (160) stroke	35
SKID, ROV TOOL F/ SAMPLING SKID	P6000041732	1500	4186	600	1751
HPU, EXTENSION SKID, ROV MOUNTED	P6000041744	1500	3000	770 500	700
BASKET, INSTALLATION F/ FLYING LEADS, EFL & INJ. HFL, ASSY	P6000041697	3300	4290	3460	3774
RUNNING TOOL, MULTI PURPOSE, ORIENTATION DEVICE SWL. 5000 KG	7602274		3406		45
MRT SOFTLANDING EXTENSION KIT	100030589		441		8
WEPCO GUIDE WIRE ANCHOR SWL 4T, ACC. VMO	100017933	ø 73	720		16
TORQUE TOOL, GEAR BOX, ISO 136	P6000015059	ø 398	285	783	63
ROV TOOL, STAB 6L, 207 BAR, (INCL. HOSES & BOX)	100032226		438		7
SURFACE Equipment					
	P6000041660				
TEST & TRANSP. SKID, VCAT MK2, VECON 2.4	100061727				

EQUIPMENT DESCRIPTION	Part Number	FMC Document	CPY Document
TOPSIDE ELECTRICAL EQUIPMENT			
Subsea Power and Communication Unit, SPCU200E	P6000046557 P6000046558 P6000046559 P6000046560	OPR60037688	AO-040-SF-400-150049
SCU 200, PANEL, SUBSEA CONTROL CABINET	P6000044482 P6000044483 P6000044484 P6000044485 P6000044486	OPR60037691	AO-040-SF-400-150050
SDPU - SUBSEA DATA PROCESSING UNIT, CABINET	P6000055338	OPR60057252	AO-040-SF-400-150212
SWIMS, TOPSIDE	P6000042645	ICP60051513 OMM60054974	AO-040-SX-400-131622 AO-040-SX-400-131805
SWIMS, SUBSEA	P6000042644	ICP60051513	AO-040-SX-400-131622
SPCTU 200, E, 620 VAC	P6000046536	OPR60037704	AO-040-SF-400-150051
TOPSIDE HYDRAULIC EQUIPMENT			
Hydraulic Power Unit, HPU	P6000043464	OPR60038165	AO-040-SG-400-150055
Test & Flushing HPU, TFHPU, EX	P6000045329	OPR60038168	AO-040-SG-400-150056
Test & Flushing HPU, TFHPU, non Ex	P6000043468	OPR60064639	AO-040-SG-400-150085
SUBSEA DISTRIBUTION			
ELECTRICAL AND HYDRAULIC FLYING LEADS	MANY	ICP60037717	AO-040-SF-400-150129
COBRAHEAD	MANY	ICP60038201	AO-040-SF-400-150025
SUBSEA CONTROL MODULE SYSTEM			
SCM MK III, 620, PXT, PAZFLOR SPS	P6000042968 P6000042969 P6000042970 P6000042980 P6000042981	ICP60049215	AO-040-SF-400-170125
CIDV RETRIEVAL AND INSTALLATION PROCEDURE	P6000044442 P6000044443 P6000044444 P6000044445	ICP60038197	AO-040-SF-400-150024
ACOUSTIC PIG DETECTOR RETRIEVAL AND INSTALLATION PROCEDURE	P6000043598	ICP60039161	AO-040-SF-400-150139
ACOUSTIC PIG DETECTOR	P6000043598	OMM60039160	AO-040-SF-400-150142
MPFM SCR RETRIEVAL AND INSTALLATION PROCEDURE	P6000042304	ICP60038190	AO-040-SF-400-150023

14.2 Document numbers

MPFM HW USER MANUAL	P6000042048	OMM60013195	AO-040-SF-400-150046
MPFM SW USER MANUAL	P6000042048	OMM60038192	AO-040-SF-400-150048
ACOUSTIC SAND DETECTOR	P6000043599	ICP60038204	AO-040-SF-400-150026
WELLHEAD SYSTEM			
PAZFLOR WELLHEAD RIG BOOK		OMM20008906	AO-040-SX-400-130891
TESTING BOP STACK WITH WHRT		ICP100002807	AO-040-SX-400-130589
UWD-15, CONDUCTOR HSG WELDMENT, 36-15K WITH DRILL-AHEAD TOOL	P2000008234	ICP20005034	AO-040-SX-400-130236
UWD-15, CONDUCTOR HSG WELDMENT, 36-15K WITH CAM TOOL	P2000008234	ICP20005082	AO-040-SX-400-130237
UWD-15, WELLHEAD HSG WELDMENT, 18-3/4-15K H4 PROFILE	P2000008235	ICP100006115	AO-040-SX-400-130223
UWD-15, CASING HANGER ASSY	P2000008237 P2000008238	ICP200002714	AO-040-SX-400-130225
UWD-15 M2M ANNULUS SEAL ASSY, F/ 18 3/4 10/15K	P205799	ICP100002857	AO-040-SX-400-130221
UWD-15, BORE PROTECTOR ASSY, WITH CAM TOOL	18-909-066	ICP100002827	AO-040-SX-400-130214
UWD-15, WEAR BUSHING ASSY	P2000000631 DP-18-4774	ICP100002850	AO-040-SX-400-130215
EDPHOT EXTENSION SUB, EMERGENCY DRILL PIPE HANGOFF TOOL	P2000012088	ICP100002856	AO-040-SX-400-130220
WH RUNNING TOOLS			
SPRING LOADED TOOL	18-920-138	ICP100002852	AO-040-SX-400-130588
ANNULUS SEAL ASSY RUNNING TOOL, (ASART),	P205896	ICP200002876	AO-040-SX-400-130230
CEMENT CLEAN OUT TOOL	18-922-059	ICP200003542	AO-040-SX-400-130233
RUNNING CONDUCTOR HOUSRING WITH DAT		ICP20012355	AO-040-SX-400-131956
TUBING HANGER SYSTEM			
TH ASSY, CONCENTRIC, EHXT, 7-10K, PRODUCTION WITH IWC	P2000009611 P2000009613 P2000011009 P2000009617 P2000009619	ICP20007701	AO-040-SX-400-130087
CROWN WIRELINE PLUG ASSY	P2000011073 P2000011072	ICP20005072	AO-040-SX-447-130003
ROV TREE CAP, EHXT, ASSY, TUBING HANGER INDEPENDANT SECONDARY LOCK (INTERNAL THISL)	P207285	ICP20003948 ICP20005943	AO-040-SX-400-130081 AO-040-SX-400-130085

TUBING HANGER HANDLING TOOL ASSY, 10K F/18 3/4 OD	P207321	ICP20004075	AO-040-SX-400-130082
INSTALLATION / REMOVAL TOOL ASSY, F/ ASSEMBLY OF INTERNAL THISL	P208694	ICP20007970	AO-040-SX-400-131100
GUIDE FUNNEL ASSY, TUBING HANGER INTERVENTION GUIDE (THIG) ASSY	P2000011357 P2000017341	ICP200002683	AO-040-SX-400-130077
TH Running Tools			
TUBING HANGER RUNNING/ RETRIEVAL TOOL ASSY 10K F/ 18 3/4 OD	P207808	ICP200002049	AO-040-SX-400-130076
TUBING HANGER WASHOUT TOOL ASSY, 7-10K F/ 18 3/4 OD	P208132	ICP200004414	AO-040-SX-400-130080
THISL RETRIEVAL TOOL ASSY, F/ EHXT INTERNAL THISL	P208499	ICP20003948 ICP20005943	AO-040-SX-400-130081 AO-040-SX-400-130085
INTERNAL TREE CAP ASSY, THISL RUNNING TOOL ASSEMBLY, F/ HOT STAB, 10K SUPPLY	P2000010917	ICP20007970	AO-040-SX-400-131100
TUBING HANGER MECHANICAL RETRIEVAL TOOL ASSY, 7-10K F/ 18 3/4 OD, W/ 6 5/8 FH BOX TOP	P2000009744	ICP20009028	AO-040-SX-400-130864
ADAPTER ASSY, 6.0-4NA-2G PIN TOP X 7 IN. EMERGENCY TUBING HANG OFF TOOL	P2000012785	ICP20010027	AO-040-SX-400-130971
X-MAS TREE SYSTEM			
XT SYSTEM OPERATIONS MANUAL		OMM20011610	AO-040-SX-400-131660
EHXT ASSY	P2000009820 P2000009821 P2000009822 P2000010726	ICP20007742	AO-040-SX-400-130227
DEBRIS CAP ASSY, 18 3/4 H4 PROFILE, ROV STYLE, ROV RUN & RETRIEVED	P2000015862	ICP20004202	AO-040-SX-400-131348
EXTERNAL TREE CAP ASSY, 18 3/4, H4 PROFILE, WIRE RUN, PRODUC-TION INSULATED CAP	P2000009825	ICP20010122	AO-040-SX-400-131362
PRODUCTION CHOKE T-COSY INSTALLATION	P2000011643	ICP20010454	AO-040-SX-400-131791
XT HANDLING TOOL TOOL ASSY	P2000004562	ICP20003549	AO-040-SX-400-131296
EXTERNAL TREE CAP ASSY, 18 3/4-10K, HYDRAULIC, TORUS IV	P2000016144	ICP20011181	AO-040-SX-400-131650
MECHANICAL RELEASE TOOL ASSY F/ TORUS III CONNECTOR & MTRT OVERRIDE	P2000013972	ICP20010247	AO-040-SX-400-131295
LAOT, M3000 LINEAR ACTUATOR OVERRIDE TOOL	P2000021487	ICP20001484	AO-040-SX-400-130228

XT MECHANICAL RELEASE TOOL, F/ 18-3/4 15K TORUS IV CONNECTOR	P211104	ICP200004136	AO-040-SX-400-130229
WORKOVER SYSTEM			
IWOCS AND UMBILICAL OPERATIONAL MANUAL	P6000042603 P6000042604 P6000042605 P6000042606 P6000058551 P6000058553	OMM60038319	AO-040-SX-400-130038
IWOCS SW USER MANUAL	P6000042603 P6000042604	OPR60038321	AO-040-SX-400-130051
GOOSENECK	P6000057799 P6000056901	DU600049128 TDI60047179 DU600043980	AO-040-SX-400-131604 AO-040-SX-400-131092 AO-040-SX-400-131096
UDF	P6000043238	ICP60043587	AO-040-SX-400-130680
MANIFOLD AND TEMPLATE			
CCF/MSS INSTALLATION AND RETRIEVAL PROCEDURE	P6000041535 P6000041534	ICP60037477	AO- 040-SM-400-140050
GUIDEPOST INSTALLATION PROCEDURE	100004041 100004042	ICP60039807	AO- 040-SM-400-140076
MANIFOLD, INSTALLATION	P6000043521 P6000043522 P6000043534	ICP60037241	AO- 040-SM-400-140025
MANIFOLD VALVE OPERATION	P6000043521 P6000043522 P6000043534	OPR60037244	AO- 040-SM-400-140024
PLM, ASSY	P6000041413	ICP60037935	AO- 040-SM-400-140046
PLM OPERATION MANUAL	P6000041413	OPR60037934	AO- 040-SM-400-140045
MQC OUTBOARD PLATE WITH CIDV, LOGIC CAP	P6000044822	ICP60038205	AO-040-SF-400-150027
MQC OUTBOARD SEAL CAP	P6000044814 P600044817 P6000053183 P6000053184	OMM60026972	AO-040-SF-400-150047
UMBILICAL - PRIMARY			
UTI, ASSY	P6000041726	ICP60037448	AO-040-SU-400-120039
SIV	P6000041725	ICP60037449	AO-040-SE-400-110007
SIV VALVE OPERATION	P6000041752	OPR60052521	AO-040-SE-400-110020
UCM, UDM & UTP INSTALLATION	MANY	ICP60037450	AO-040-SU-400-120013

TIE-IN TOOLS			
HIGH PRESSURE CAP REMOVAL PROCEDURE	MANY	ICP-0000020486	AO-040-SF-400-170314
HIGH PRESSURE CAP INSTALLATION & REMOVAL PROCEDURE	MANY	ICP60037823	AO-040-SF-400-170084
INSTALLATION PROCEDURE FOR FLOWLINE CONNECTOR, STABCON 1.4	MANY	ICP60038397	AO-040-SF-400-180026
INSTALLATION PROCEDURE FOR TERMINATION HEAD LIFTING YOKE	P6000041717	ICP60038402	AO-040-SF-400-180007
CONTINGENCY PROCEDURE FOR THE CONNECTOR ACTUATION TOOL, CAT 1.4	100059793	ICP60049390	AO-040-SF-400-170240
RE-INSTALLABLE INBOARD CAPS AND PIG RECIEVER USING STABCON 1.4	MANY	ICP60049392	AO-040-SF-400-170242
CONNECTION OF ELECTRO/HYDRAULIC UMBILICALS USING STABCON	MANY	ICP60050141	AO-040-SF-400-170243
INTERVENTION/TIE-IN OF PIGLOOP MODULE USING STABCON 1.4	P6000041413	ICP60051348	AO-040-SF-400-170273
INBOARD HIGH PRESSURE CAP REMOVAL PROCEDURE, KC4.4-12	P6000041881 P6000041655	ICP60052341	AO-040-SF-400-170244
INBOARD HIGH PRESSURE CAP INSTALLATION\REMOVAL PROCEDURE, KC4.4-12		ICP60056813	AO-040-SF-400-170309
KC4-3 CONNECTOR INSTALLATION & RETRIEVAL PROCEDURE	P6000054178	ICP60046071	AO-040-SF-400-170203
Choke insert running & retrieval Tool	100040748	ICP60041200	AO-040-SF-400-180053
SAMPLING SKID		ICP60038404	AO-040-SF-400-180028
SUBSEA HPU	P6000041744	ICP60038405	AO-040-SF-400-170131
ROV LATCH LIFT TOOL	P6000060089	OMM69953217	
INTERVENTION SYSTEM			
ROV TOOLS			
STABCON 1.4 System			
CONNECTOR ACTUATION TOOL, CAT1.4	100059793	ICP60050141	AO-040-SF-400-170243
TOOL BASKET ASSY, F/ GENERAL USE, ROV TOOLS, STABCON 1.4	P6000041698	OMM60042231	AO-040-SF-400-180065
ROV TOOL, HUB CLEANING, KC4.4-12, STABCON 1.4, INSULATED/UNINSULATED INBOARD/OUTBOARD, MULTIBORE	P6000041642	P6000046912-OMM	AO-040-SF-453-180044

ROV TOOL, HUB CLEANING, KC4.4-12, 1.4, INSULATED/UNINSULATED, INBOARD/OUTBOARD, MONOBORE	P6000041649	P6000046913-OMM	AO-040-SF-453-180043
ROV TOOL, SEAL-REPLACEMENT, KC4.4-12, STABCON 1.4, INSULATED/UNINSULATED, OUTBOARD, MULTIBORE	P6000041643	P6000047013-OMM	AO-040-SF-453-180021
ROV TOOL, SEAL-REPLACEMENT, KC4.4-12, STABCON 1.4, INSULATED/UNINSULATED, OUTBOARD, MONOBORE	P6000049517	P6000046925-OMM	AO-040-SF-453-180018
ROV TOOL, CAP REMOVAL, KC4.4-12, INBOARD, INSULATED/UNINSULATED	P6000041655	P6000041655-OMM	AO-040-SF-453-180060
ROV TOOL, CLAMP REMOVAL, KC4.4-12, INBOARD, INSULATED/UNINSULATED	P6000041881	P6000041881-OMM	AO-040-SF-453-180062
INSTALLATION TOOL, TERMINATION HEAD, LIFTING YOKE, STABCON 1.4	P6000041717	ICP60038402 OMM60038359	AO-040-SF-400-180007 AO-040-SF-400-180008
OVERRIDE JACK PLM/YOKE	100008621	OMM60017352	AO-040-SF-400-180009
OVERRIDE JACK, CAT FLYING INTERFACE	100012241	OMM60019113	AO-040-SF-400-180102
ROV TOOL, OVERRIDE JACK, STABCON 1.4, INSULATED/UNINSULATED, TERMINATION HEAD LOCKING MECHANISM	P6000041644	OMM60041793	AO-040-SF-400-180061
VECON 2.4 System			
VCAT ASSY, VECON MK2	100031332	ICP60038398 OMM60038352	AO-040-SF-400-180027 AO-040-SF-400-180021
HUB CLEANING, KC4.4-10, VECON 2.4, INSULATED/UNINSULATED, INBOARD, MONOBORE	P6000041651	P6000041651-OMM	AO-040-SF-453-180026
HUB CLEANING, KC4.4-10, VECON, 2.4, INSULATED/UNINSULATED, OUBOARD, MONOBORE	P6000046896	P6000046896-OMM	AO-040-SF-453-180027
SEAL-REPLACEMENT, KC4.4-10, VECON 2.4, INSULATED/UNINSULATED, INBOARD, MONOBORE	P6000041653	P6000041653-OMM	AO-040-SF-453-180025
SECONDARY RELEASE TOOL, VECON	100033788	OMM60042338	AO-040-SF-400-170172
TOOL BASKET ASSY, F/ ROV TOOLS, ADAPTER KIT FOR VECON 2.4 TOOLS, ASSY	P6000058218	DU600047810	AO-040-SF-400-180293
GENERAL Tools			
WELLHEAD CLEANING, VX 18 3/4	P6000032617	P6000032617-OMM	

SEAL-REPLACEMENT, WELLHEAD VX	P6000011921	P6000011921-OMM	AO-040-SF-453-180006
EXTERNAL SEAL TEST KIT, ASSY	P6000039162	OMM60039706	AO-040-SF-400-180060
HUB INSPECTION CAMERA, MK.2	P6000046966	OMM60041552	AO-040-SF-400-180067
STAB 4L, 345 BAR, MALE, ASSY	100002110	OMM60017343	AO-040-SF-400-170133
TORQUE TOOL, API 17D CLASS 1-4 (2700 NM)	100035992	100035992-OMM	AO-040-SF-453-180009
REMOTE CONTROL UNIT, MK2	100035993	100035993-OMM	AO-040-SF-453-180024
Jumper, Stab 6L, 207 bar w/tr.box (2,5 m hoses)	100046149	OMM60049194	AO-040-SF-400-180152
Flying Lead Orientation Tool (FLOT)	100036811	100036811-OMM	AO-040-SF-400-180089
TORQUE TOOL, GEAR BOX, ISO 13628-8 CLASS 4-5	P6000052092	P6000052092-OMM	AO-040-SF-453-180047
LATCH UNIT TOOL, MULTI FUNC-TIONAL, MK4	100014893	OMM60046117	AO-040-SF-400-180177
TORQUE ADAPTER KIT, ASSY	100012558	OMM60017351	AO-040-SF-400-180057
MODULE RUNNING TOOL, SUBSEA CONTROL MODULE, FOR SCM MK III	100015275	ICP-0000020148	NA
CHOKE RUNNING TOOL, MF dact. 25 deg	100040748	ICP60019199	AO-040-SF-400-170126
OVERRIDE JACK, KC4-3, TYPE 3	P6000034203	OMM60041195	AO-040-SF-400-180112
SCM OVERRIDE TOOL, MKII	100029631	OMM60017348	AO-040-SG-400-170004
OVERRIDE JACK, MQC, MK2	7604322	OMM60017345	AO-040-SF-400-170135
SKID, ROV TOOL F/ SAMPLING SKID	P6000041732	NA	
HPU, EXTENSION SKID, ROV MOUNTED	P6000041744	17897	AO-040-SF-458-170004
BASKET, INSTALLATION F/ FLYING LEADS, EFL & INJ. HFL, ASSY	P6000041697	OMM60038358	AO-040-SF-400-180016
RUNNING TOOL, MULTI PURPOSE, ORIENTATION DEVICE SWL. 5000 KG	7602274	DU600045679	AO-040-SF-400-180051
MRT SOFTLANDING EXTENSION KIT	100030589	OMM60050411	AO-040-SF-400-180285
WEPCO GUIDE WIRE ANCHOR SWL 4T, ACC. VMO	100017933	USM-0000022052	AO-040-SF-400-180118
TORQUE TOOL, GEAR BOX, ISO 136	P6000015059	P6000015059-OMM	AO-040-SF-453-180041
ROV TOOL, STAB 6L, 207 BAR, (INCL. HOSES & BOX)	100032226	OMM60025890	AO-040-SF-400-180151

DRAWING DESCRIPTION	FMC Document	CPY Document
SCU-SPCU Network Topology	DA600043815	AO-040-SG-400-150102
Overall Electrical Schematic - Controls, Pazflor SPS	DA600040674	AO-040-SG-400-150094
Hydraulic Schematic Diagram, Production HPU	11238-D02-001	AO-040-SG-416-150008
SSS & SPS - Subsea EDS Safety Bar	DA600038965	AO-040-SF-400-150164
SCM MKIII Electrical/Sensor Schematic, Pazflor SPS	DA600032689	AO-040-SG-400-150007
System Drawing - Controls, Pazflor SSPS	DA600032394	AO-040-SF-400-150001
Subsea Wellhead Layout, Scope Of Supply F/ Total Pazflor	DM200018427	AO-040-SX-400-130018
Subsea EHXT Scope Of Supply Drawing, 5-1/8 X 2-1/8-10K Tree System F/ Total Pazflor	DM200018361	AO-040-SX-400-131578
Hydraulic/electrical Ehxt Schematic, Production W/o Iwc	DU200019054	AO-040-SX-400-130587
SCM Hydraulic Schematic, Open Circuit, PXT, Pazflor SPS	DA600032692	AO-040-SG-400-150014
Hydraulic/Electrical EHXT P&ID Schematic, Water Injection W/O IWC	DU200018773	AO-040-SX-400-130584
Hydraulic/Electrical EHXT P&ID Schematic, Water Injection W/IWC	DU200019010	AO-040-SX-400-130586
Hydraulic/Electrical EHXT P&ID Schematic, Gas Injection	DU200018864	AO-040-SX-400-130585
SCM Hydraulic Schematic, Open Circuit, IXT, Pazflor SPS	DA600032693	AO-040-SG-400-150011
Subsea EHXT Scope of Supply Drawing, 7 X 2-10K Tubing Hanger System F/Total Pazflor	DM200018305	AO-040-SX-400-130059
WOCS Subsea System Schematic	DA600039772	AO-040-SX-400-130828
Manifold, Production, Flow Schematic, Pazflor	DA600031729	AO-040-SM-400-140006
SCM Hydraulic Schematic, Open Circuit, Man/SIV, Pazflor SPS	DA600032667	AO-040-SG-400-150015
UTP, Module, Flow Schematic	DA600033133	AO-040-SU-400-120006
UCM, Module, Flow Schematic	DA600032082	AO-040-SU-400-120012
UDM, Module, Flow Schematic	DA600032069	AO-040-SU-400-120018
SIV, Module, Flow Schematic	DA600032068	AO-040-SE-400-110012

14.3 Drawing descriptions and numbers

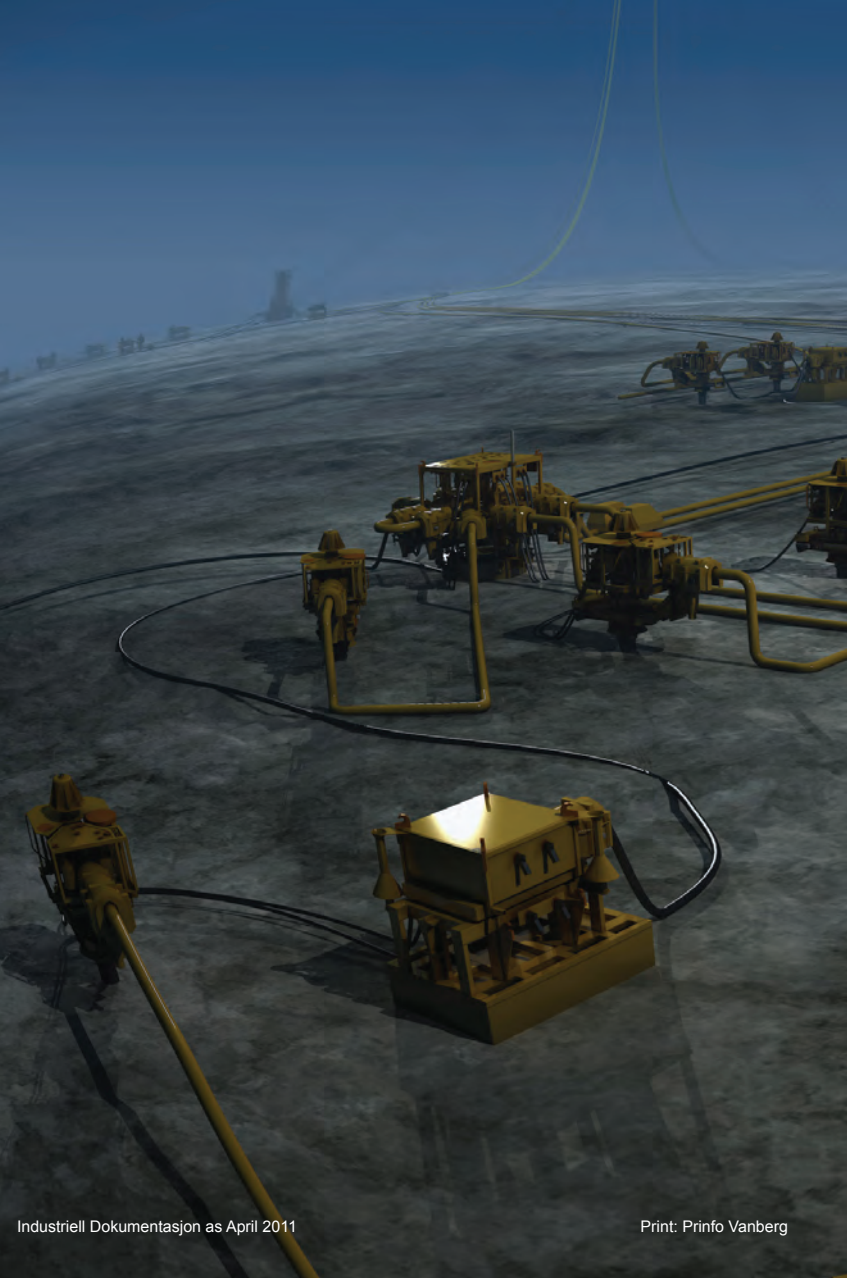

Industriell Dokumentasjon as April 2011

Print: Prinfo Vanberg